# SUPERSET XL

SCORNICIATRICE AUTOMATICA
THROUGHFEED PLANER MOULDER
MOULURIERE AUTOMATIQUE
PROFILFRAESAUTOMAT
MOLDURERA AUTOMATICA

CATALOGO DELLE PARTI DI RICAMBIO
SPARE PARTS CATALOGUE
CATALOGUE DE PIECES DETACHEES
ERSATZTEILKATALOG
CATALOGO REPUESTOS

scm

**PREMESSA**

Il presente manuale è stato preparato dalla SCM esclusivamente per l'uso da parte dei propri clienti garantendo che esso costituisce, alla data di edizione la documentazione più aggiornata relativa all'uso del prodotto.
L'uso del presente manuale avviene sotto la completa responsabilità dell'utente.
Nessuna ulteriore garanzia viene pertanto concessa dalla SCM per eventuali imperfezioni, incompletezze e/o difficoltà operative, restando espressamente esclusa ogni responsabilità sua per danni diretti o indiretti comunque derivanti dall'uso di tale documentazione.
SCM si riserva il diritto di apportare modifiche al prodotto descritto in questo manuale in qualsiasi momento e senza preavviso.
Tutti i diritti di riproduzione sono riservati alla SCM RIMINI

**INTRODUCTION** SCM has prepared this handbook solely for the use of its customers, guaranteeing that as of the date of issue it constitutes the most up-to date documentation concerning the use of the product.
This handbook is used under the sole responsibility of the user.
SCM thus grants no further guarantee with regard to any imperfections, omissions and/or operating difficulties, and any liability on its side for direct or indirect damage deriving in any way from the use of the documentation is explicitly excluded.
SCM reserves the right to make modifications to the product described in this handbook at any moment, without notice.
All rights reserved by SCM RIMINI

**INTRODUCTION**

C'est exclusivement à l'intention de ses clients que SCM a préparé ce manuel. Notre Société vous assure qu'à la date de sa publication, il représente la documentation la plus récemment mise à jour pour l'utilisation du produit.
L'utilisateur est le seul responsable de l'emploi correct de ce manuel.
Il reste entendu que SCM n'accordera aucune garantie complémentaire couvrant toute imperfection, donnée incomplète et/ou difficulté opérationelle.
SCM décline toute responabilité relative aux dommages éventuels, directs ou indirects, susceptibles de dériver de l'utilisation de ce manuel.
SCM se réserve le droit de modifier le produit décrit dans ce manuel, à tout moment et sans préavis.
Tous droits réservé à la SCM RIMINI

**VORWORT**

Fa. SCM hat vorliegendes Handbuch nur für ihre Kunden ausgearbeitet und gewährleistet, daß diese Auflage auf den letzten Stand gebracht wurde.
Die Anwendung dieses Handbuches erfolgt unter der vollen Verantwortung des Gebrauchers.
Fa. SCM leistet daher keine weitere Garantie für etwa Mangelhaften, Fehlerhaften und/oder schwierigen Betrieb, und lehnt jede Haftung für direkte oder indirekte, auf jeden Fall vom Gebrauch dieser Unterlagen herrührende Schäden ausdrücklich ab.
Fa. SCM behält sich das Recht vor, das beschriebene Produkt jederzeit und ohne Vorbescheid abzuändern.
Alle Nachdruckrechte sind der SCM RIMINI

**PREMISA**

El presente manual ha sido preparado por SCM, exclusivamente para ser usado por sus propios clientes, garantizando que éste constituye, a la fecha de la edición, la documentación más actualizada referente al uso del producto.
El uso del presente manual se realizada bajo la completa responsabilidad del Usuario.
Por lo tanto no se concede ninguna garantía adicional por parte de SCM por eventuales imperfecciones, por estar incompleto y/o por dificultades operativas, quedando excluidas expresamente cualquier tipo de responsabilidad de ésta por daños directos, o indirectos, o que de cualquier modo deriven por el uso de esta documentación.
SCM se reserva el derecho de aportar modificaciones al producto descripto en el presente manual en cualquier momento y sin previo aviso.
SCM Rimini se reserva todos los derechos de reproducción.

© Copyright 1999 by SCM / SCMI RIMINI

Printed in Italy

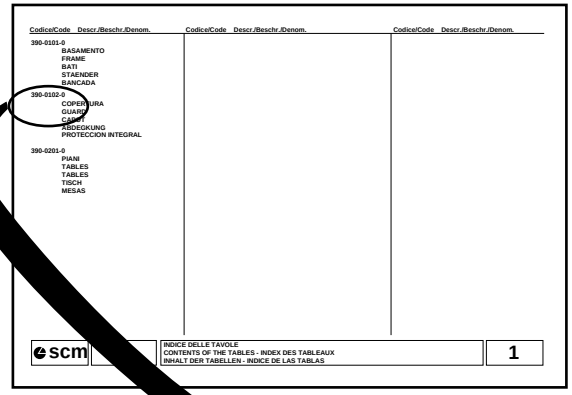


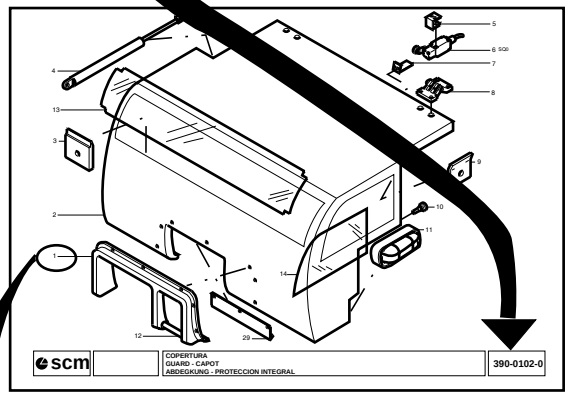


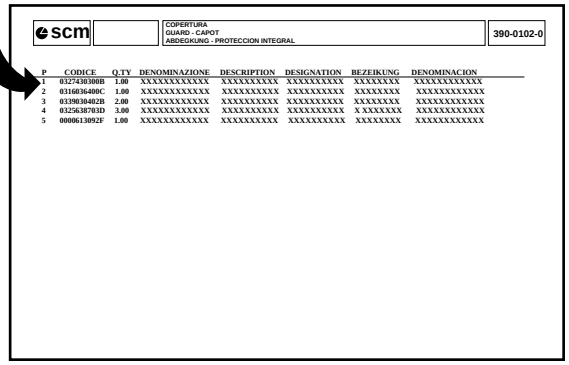


**1**

**NELL'INDICE ANAGRAFICO APPAIONO LE TAVOLE IN CUI E' SUDDIVISO IL CATALOGO RICAMBI**
**THE ALPHABETIC CONTENTS SHOWS THE TABLES OF THE CATALOGUE**
**L'INDEX ALPHABETIQUE INDIQUE LES TABLEAUX DU CATALOGUE**
**DER ALPHABETISCHE INHALT ZEIGT DIE TABELLEN DES KATALOGES**
**EN EL INDICE ANAGRAFICO APARECEN LAS TABLAS EN LAS QUE SE SUBDIVIDE EL CATALOGO REPUESTOS**

**2**

**ANDATI ALLA TAVOLA DESIDERATA SI CERCA NELLA PARTE GRAFICA IL PARTICOLARE**
**IN THE GRAPHIC PART OF THE DESIRED TABLE SEEK THE DETAIL**
**DANS LA PARTIE GRAPHIQUE DU TABLEAU DESIRE CHERCHER LA PIECE**
**DEN ERSATZTEIL IN DEM GRAPHIKTEIL DER GEWUENSCHTEN TABELLE SUCHEN**
**UBICADOS EN LA TABLA DESEADA SE BUSCA EL ELEMENTO EN LA PARTE GRAFICA**

**3**

**NELLA PARTE ANAGRAFICA DELLA TAVOLA, DAL NUMERO DI RIFERIMENTO DEL PARTICOLARE SI RISALE AL NUMERO DI CODICE.**
**NEI CATALOGHI DEDICATI A SINGOLE MACCHINE (NUMERO DI MATRICOLA IN COPERTINA) LA PARTE ANAGRAFICA RIPORTERA' SOLAMENTE I NUMERI DI CODICE DEI PARTICOLARI CHE COMPONGONO "QUELLA" MACCHINA**

**IN THE ALPHABETIC PART OF THE TABLE FROM THE REFERENCE NUMBER OF THE PART YOU GET THE CODE NUMBER. IN THE CATALOGUES FOR PECULIAR MACHINE (SERIAL NUMBER ON THE COVER) THE ALPHABETIC PART GIVES ONLY THE CODE NUMBERS OF THE PARTS OF THAT MACHINE.**

**DANS LA PARTIE GRAPHIQUE DU TABLEAU DU NUMERO DE REFERENCE ON OBTIENT LE NUMERO DE CODE. DANS LES CATALOGUES POUR MACHINES PARTICULIERES (NUMERO DE MATRICULE SUR LA COVERTURE) LA PARTIE ALPHABETIQUE DONNE SEULEMENT LES NUMEROS DE CODE DES PARTIES DE CETTE MACHINE.**

**IN DEM ALPHABETISCHEN TEIL DER TABELLE VON DER KENNZIFFER ERREICHT MAN DIE CODENUMMER. BEI KATALOGEN FUER SONDERMASCHINEN (MASCHINENUMMER AUF DEM UMSCHLAG) GIBT DAS ALPHABETISCHE TEIL NUR DIE CODENNUMMER DER TEILE JENER MASCHINE.**

**EN LA PARTE ANAGRAFICA DE LA TABLA, CON EL NUMERO DE REFERENCIA DEL ELEMENTO SE ENCUENTRA EL NUMERO DE CODIGO**
**EN LOS CATALOGOS DEDICADOS A MAQUINAS ESPECIALES (NUMERO DE MATRICULA EN LA TAPA) LA PARTE ANAGRAFICA TIENE SOLO LOS NUMEROS DE CODIGO DE LOS ELEMENTOS QUE COMPONEN "ESA" MAQUINA.**

scm

**COME CONSULTARE IL CATALOGO**
**HOW TO CONSULT THE CATALOGUE - COMMENT CONSULTER NOTRE CATALOGUE**
**WIE IM KATALOG NACHGESCHLAGEN WIRD - COMO CONSULTAR EL CATALOGO**

scm

# 1

INDICARE SEMPRE:
ALWAYS SPECIFY:
SPECIFIER TOUJOURS:
IMMER ANGEBEN:
INDICAR SIEMPRE:

**A**
-MODELLO
-MODEL
-MODELE
-MODELL
-MODELO

**B**
-NUMERO DI MATRICOLA
-MACHINE NUMBER
-NUMERO DE MATRICULE
-MASCHINENNUMMER
-NUMERO DE MATRICULA

**C**
-TENSIONE DI ESERCIZIO
FREQUENZA DI RETE
-RATED VOLTAGE
MAINS FREQUENCY
-TENSION D'EXERCICE
FREQUENCE DE RESEAU
-BETRIEBSSPANNUNG
NETZFREQUENZ
-TENSION DE TRABAJO
FREQUENCIA DE RED

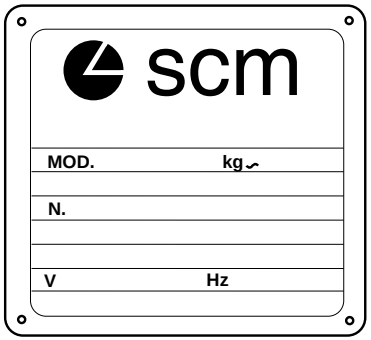


# 2

PER OGNI PARTE RICHIESTA INDICARE:
FOR EVERY PART REQUIRED SPECIFY:
POUR TOUTE PARTIE DEMANDEE SPECIFIER:
FUER JEDES ERSATZTEIL ANGEBEN
EN CADA PEDIDO INDICAR

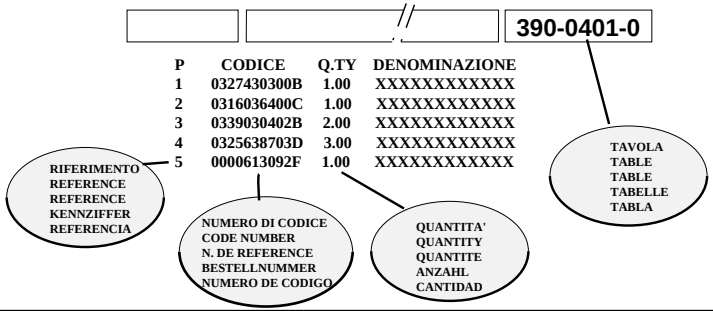


# 3

-PER QUEI COMPONENTI ELETTRICI OD ELETTROMECCANICI CHE NON FIGURANO NEL CATALOGO, E' NECESSARIO INDICARE OGNI DATO REPERIBILE SULLA TARGHETTA O STAMPIGLIATO SU DI ESSI.

-FOR ELECTRIC AND ELECTROMECHANICAL COMPONENTS NOT LISTED, YOU SHOULD SUPPLY INFORMATION FOR EVERY ITEM ON THE PLATE OR PRINTED ON THE COMPONENT.

-POUR LES COMPOSANTS ELECTRIQUES ET ELECTROMECHANIQUES NON REPORTES, FOURNIR TOUTES LES DONNEES INDIQUEES SUR LA PLAQUE OU SUR LE COMPOSANT MEME.

-FUER DIE NICHT AUFGEFUEHRTEN ELEKTRISCHEN UND ELEKTRO-MECHANISCHEN BESTANDTEILE SIND ALLE AUF DEM SCHILD ODER AUF DEN TEILEN SELBST VERMERKTEN DATEN ANZUGEBEN.

-PARA LOS COMPONENTES ELECTRICOS O ELECTROMECANICOS QUE NO SE ENCUENTRAN EN EL CATALOGO, ES NECESARIO INDICAR TODOS LOS DATOS QUE SE MUESTRAN EN LA TARJETA O IMPRESOS EN LOS MISMOS.

# 4

INDIRIZZARE A:
SEND TO:
ADRESSER A:
EINZUREICHEN BEI:
DIRIGIR A:

**SCM**
**Servizio Ricambi**
**via Casale, 450**
**47827 VILLA VERUCCHIO ITALY**
**Tel. 0541 - 674111**

SUL RETRO MODULO PER RICHIESTA RICAMBI, DA FOTOCOPIARE, COMPILARE E INVIARE AL CONCESSIONARIO / OVERLEAF YOU FIND THE FORM TO PHOTOCOPY, FILL AND SEND TO THE DEALER
AU VERSO MODULE A PHOTOCOPIER, REMPLIR ET ENVOYER AU CONCESSIONAIRE / AUF DER RUECKSEITE FINDET MAN DAS FORMBLATT, DAS SIE PHOTOCOPIEREN, EINFUELLEN UND AN DEN HAENDLER SENDEN MUESSEN
EN LA PARTE DE ATRAS DEL MODULO PARA PEDIDOS DE REPUERTOS, FOTOCOPIAR Y ENVIAR AL CONCESIONARIO AU VERSO MODULE

scm

**COME ORDINARE LE PARTI DI RICAMBIO**
**HOW TO ORDER SPARE PARTS - COMMENT COMMANDER LES PIECES DETACHEES**
**WIE ERSATZTEILE BESTELLT WERDEN - COMO ORDENAR LOS REPUESTOS**

scm

**SERVIZIO RICAMBI**
**SPARE PARTS DEPARTMENT**
**SERVICE PIECES DETACHEES**
**ERSATZTEILDIENST**

**ORDINE DI PARTI DI RICAMBIO**
**ORDER OF SPARE PARTS**
**ORDRE DE PIECES DETACHESS**
**ERSATZTEILBESTELLUNG**

**DATA/DATE/DATE/DATUM** _____

**ORDINE**
**ORDER**
**ORDRE**
**BESTELLUNG** **N.** _____

| CLIENTE / CUSTOMER / CLIENT / KUNDE: | VIA / STREET / RUE / STRASSE: | NUM. CIV.<br>NUMBER:<br>n°:<br>HAUSNUMMER |
|---|---|---|
| C.A.P.<br>ZIP CODE<br>CODSE POSTAL (CEDEX)<br>POSTLEITZAHL | LOCALITA' / CITY / VILLE / WOHNORT: | NAZIONE / COUNTRY / NATION / NATION: |

MEZZO DI SPEDIZIONE RICHIESTO: REQUIRED SHIPPING MEANS: MOYEN D'EXPEDITION DEMANDE: GEWUENSCHTE SPEDITIONSART:

| | | | | | | | |
|---|---|---|---|---|---|---|---|
| ☐ CORRIERE<br>BY TRUCK<br>PAR CAMION<br>LASTWAGEN | ☐ CON CARICO MACCHINE<br>WITH SHIPMENT OF MACHINES<br>AVEC CHARGEMENT DE MACHINES<br>VERLADUNG MIT MASCHINE | ☐ FERROVIA<br>BY RAIL<br>PAR CHEMIN DE FER<br>BAHNFRACHT | ☐ PACCO POSTALE<br>BY PARCEL POST<br>PAR LA POSTE<br>POSTFRACHT | ☐ VIA MARE<br>BY SHIP<br>PAR MER<br>SEEFRACHT | ☐ COLLO AEREO<br>BY ARI FREICHT COLLET<br>PAR AVION<br>LUFTFRACHT | ☐ MEZZO PROPRIO<br>BY CUSTOMER'S MEANS<br>AU MOYEN DU CLIENT<br>EIGENES FAHRZEUG | ☐ ALTRI<br>OTHERS<br>D'AUTRES<br>ANDERWEITIG _____ |

NOTE / NOTES / NOTES / ANMERKUNGEN: _____

| TIPO MACCHINA<br>TYPE OF THE MACHINE<br>TYPE DE MACHINE<br>MASCHINENMODELL | N. MATRICOLA<br>SERIAL NUMBER<br>N. DE MATRICULE<br>MASCHINEN Nr. | INDICAZIONE A CATALOGO<br>CATALOGUE DIRECTIONS<br>INDICATION DU CATALOGUE<br>KATALOG. HINWEISE | | CODICE<br>CODE NUMBER<br>CODE<br>CODE Nr. | DESCRIZIONE<br>SPECIFICATION<br>DESCRIPTION<br>BESCHREIBUNG | QUANTITA'<br>QUANTITY<br>QUANTITE<br>STUECKZAHL | PREZZO<br>PRICE<br>PRIX<br>PREIS |
|---|---|---|---|---|---|---|---|
| | | N. TAV<br>TAB. N.<br>N. TAB.<br>TAB. Nr. | N. RIF<br>REF. N.<br>N. REF.<br>BEZ. Nr. | | | | |
| | | | | | | | |
| | | | | | | | |
| | | | | | | | |
| | | | | | | | |
| | | | | | | | |
| | | | | | | | |
| | | | | | | | |
| | | | | | | | |
| | | | | | | | |
| | | | | | | | |
| | | | | | | | |
| | | | | | | | |
| | | | | | | | |
| | | | | | | | |
| | | | | | | | |

SPAZIO RISERVATO — SPACE RESERVED — ESPACE RESERVE — RESERVIERTER PLATZ

CODICE CLIENTE ☐☐☐☐☐ VALUTA ☐ SPEDIZIONE DA EFFETTUARSI IL: _____ SPEDIZIONE EFFETTUATA IL: _____ SPEDIRE CON MACCHINA: _____ CARTELLINO Nr.: _____ PRODOTTA IL: _____

## SIMBOLI — SIMBOLS — SYMBOLES — SYMBOLE — SIMBOLOS

| | | | | |
|---|---|---|---|---|
| ① ② ③ ④ | RICHIAMO GENERICO (NOTA)<br>GENERAL REFERENCE MARK (NOTE)<br>RENVOI GENERAL (NOTE)<br>ALLGEMEINER VERWEIS (ANMERKUNG)<br>LLAMADO GENERAL (NOTA) |  | COPPIA<br>PAIR<br>COUPLE<br>PAAR<br>PAR |
| ❶ ❷ ❸ ❹ | ASSIEME, GRUPPO, COMPLESSIVO<br>ASSEMBLY<br>ENSEMBLE, GROUPE<br>SATZ<br>CONJUNTO, GRUPO |  | TERNA<br>TERN<br>GROUPE DE TROIS<br>DREIERGRUPPE<br>TERNA |
|  | ASSIEME, GRUPPO, COMPLESSIVO<br>ASSEMBLY<br>ENSEMBLE, GROUPE<br>SATZ<br>CONJUNTO, GRUPO |  | QUATERNA<br>SET OF 4 PIECES<br>JEU DE QUATRE<br>VIERERSATZ<br>CONJUNTOS DE 4 ELEMENTOS |
|  | ASSIEME DEI COMPONENTI RAFFIGURATI NELLA TAVOLA<br>SETS OF COMPONENTS SHOWN ON THE TABLE<br>ENSEMBLE DES COMPONENTS REPRESENTES SUR LA TABLEAU<br>GESAMTHEIT DER IN DER TABELLE DARGESTELLTEN BESTANDTEILE<br>CONJUNTO DE COMPONENTES EN TABLA | | |
| Ⓐ Ⓑ Ⓒ | ASSE GEOMETRICO<br>GEOMETRIC AXIS<br>AXE GEOMETRIQUE<br>GEOMETRISCHE ACHSE<br>EJE GEOMETRICO |  | SPOSTAMENTO MANUALE<br>MANUAL DISPLACEMENT<br>DEPLACEMENT MANUEL<br>HANDVERSTELLUNG<br>DESPLAZAMIENTO MANUAL |
| Ⓘ Ⓕ Ⓓ | SPECIFICO PER LA NAZIONE INDICATA<br>SPECIFIC FOR THIS COUNTRY<br>SPECIFIQUE POUR LA NATION INDIQUEE<br>AUF DIESES LAND BEZOGEN<br>ESPECIFICO PARA LA NACIÓN INDICADA |  | SPOSTAMENTO MOTORIZZATO<br>POWERED DISPLACEMENT<br>DEPLACEMENT MOTORISEE<br>VERSTELLUNG MITTELS MOTORS<br>DESPLAZAMIENTO MOTORIZADO |
| Ⓘ Ⓕ Ⓓ | ESCLUSIONE PER LA NAZIONE INDICATA<br>NOT FOR THIS COUNTRY<br>EXCLUSION POUR LA NATION INDIQUEE<br>NICHT FUER DIESES LAND<br>EXCLUSIÓN PARA LA NACIÓN INDICADA | 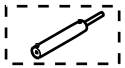 | SPOSTAMENTO PNEUMATICO<br>PNEUMATICALLY-CONTROLLED DISPLACEMENT<br>DEPLACEMENT A COMMANDE PNEUMATIQUE<br>PNEUMATISCHE VERSTELLUNG<br>DESPLAZAMIENTO NEUMATICO |
|  | TAGLIARE SU MISURA DAL ROTOLO<br>CUT FROM ROLL AS REQUIRED<br>COUPER SUR MESURE DE LA BOBINE<br>MASSGERECHT VON DER ROLLE ABSCHNEIDEN<br>CORTAR A MEDIDA DE BOBINA | | |

## - ABBREVIAZIONI - SEGNI CONVENZIONALI
## - ABBREVIATIONS - CONVENTIONAL MARKS
## - ABREVIATIONS - SIGNES CONVENTIONELS
## - ABKUERZUNGEN - UEBLICHE ZEICHEN
## - ABREVIACIONES - SEÑALES CONVENCIONALES

| | |
|---|---|
| Dx | PARTICOLARE DESTRO RAPPRESENTATO NELLA TAVOLA<br>RIGHT PART SHOWN IN THE TABLE<br>PARTIE DROITE REPRESENTE SUR LA PLANCHE<br>RECHTES AUF DER TAFEL DARGESTELLTES TEIL<br>PARTE DERECHA REPRESENTADA EN TABLA |
| Sx | PARTICOLARE SINISTRO RAPPRESENTATO NELLA TAVOLA<br>LEFT PART SHOWN IN THE TABLE<br>PARTIE GAUCHE REPRESENTE SUR LA PLANCHE<br>LINKES AUF DER TAFEL DARGESTELLTES TEIL<br>PARTE IZQUIERDA REPRESENTADA EN TABLA |
| Dx | PARTICOLARE DESTRO NON RAPPRESENTATO<br>RIGHT PART NOT SHOWN<br>PARTIE DROITE PAS REPRESENTE<br>RECHTES NICHT-DARGESTELLTES TEIL<br>PARTE DERECHA NO REPRESENTADA |
| Sx | PARTICOLARE SINISTRO NON RAPPRESENTATO<br>LEFT PART NOT SHOWN<br>PARTIE GAUCHE PAS REPRESENTE<br>LINKES NICHT-DARGESTELLTES TEIL<br>PARTE IZQUIERDA NO REPRESETADA |
| mm | GRADUAZIONE IN MILLIMETRI<br>MILLIMETER SCALE<br>ECHELLE EN MILLIMETRES<br>MILLIMETER-MASSKALA<br>ESCALA EN MILIMETROS |
| inch | GRADUAZIONE IN POLLICI<br>INCHES SCALE<br>ECHELLE EN POUCES<br>SOLL-MASSKAL<br>ESCALA EN PULGADAS |
| Ø | DIAMETRO<br>DIAMETER<br>DIAMETRE<br>DURCHMESSER<br>DIAMETRO |
| ≠ | SPESSORE<br>THICKNESS<br>EPAISSEUR<br>DICKE<br>ESPESOR |
| L | LUNGHEZZA<br>LENGTH<br>LONGUEUR<br>LANGE<br>LONGITUD |

N.B.

- DOVE NON SPECIFICATO LE MISURE SI INTENDONO ESPRESSE IN MILLIMETRI
- WHERE NOT SPECIFIED, MEASURES ARE GIVEN IN MILLIMETERS
- SANS SPECIFICATION, LES DIMENSIONS S'ENTENDENT EN MILLIMETRES
- WENN NICHT ANGEGEBEN, SIND DIE MASSE IN MILLIMETERN ZU VERSTEHEN
- DONDE NO SE ESPECIFICAN LAS MEDIDAS SE ENTIENDE EN MILIMETROS

| Codice/Code | Descr./Beschr./Denom. |
|---|---|
| **227-0001-0** | |
| | INDICE FIGURATIVO |
| | PICTORIAL INDEX |
| | INDEX EXPLICATIF |
| | BAUGRUPPENVERZEICHNIS |
| | INDICE FIGURATIVO |
| **227-0101-0** | |
| | BASAMENTO (COMPOSIZIONI 1 E 5) |
| | FRAME (1-5 VERSION) |
| | BATI (VERSION 1-5) |
| | STAENDER (1-5 VERSION) |
| | BANCADA (COMPOSICION 1 Y 5) |
| **227-0102-0** | |
| | BASAMENTO (COMPOSIZIONI 2 E 6) |
| | FRAME (2-6 VERSION) |
| | BATI (VERSION 2-6) |
| | STAENDER (2-6 VERSION) |
| | BANCADA (COMPOSICION 2 Y 6) |
| **227-0103-0** | |
| | MICRO FINECORSA |
| | LIMIT SWITCH |
| | INTERRUPTEUR FIN DE COURSE |
| | ENDSCHALTER |
| | MICRO FIN DE CARRERA |
| **227-0104-0** | |
| | POSIZIONAMENTO ORIZZ. ASSE CONTINUO V.S. |
| | CONTINUOUS AXIS HORIZONTAL POSITIONING |
| | POSITIONNEMENT HORIZONTAL AXE CONTINU |
| | HORIZONTALVERSTELLUNG MIT KONT. ACHSE |
| | UBICACION HORIZONTAL A EJE CONTINUO |
| **227-0105-0** | |
| | POSIZIONAMENTO ORIZZ. ASSE CONTINUO V.S. |
| | CONTINUOUS AXIS HORIZONTAL POSITIONING |
| | POSITIONNEMENT HORIZONTAL AXE CONTINU |
| | HORIZONTALVERSTELLUNG MIT KONT. ACHSE |
| | UBICACION HORIZONTAL A EJE CONTINUO |
| **227-0105-1** | |
| | POSIZIONAMENTO ORIZZ. ASSE CONTINUO (VS) |
| | CONTINUOUS AXIS HORIZONTAL POSITIONING |
| | POSITIONNEMENT HORIZONTAL AXE CONTINU |
| | HORIZONTALVERSTELLUNG MIT KONT. ACHSE |
| | UBICACION HORIZONTAL A EJE CONTINUO |
| **227-0106-0** | |
| | MICRO FINECORSA |
| | LIMIT SWITCH |
| | INTERRUPTEUR FIN DE COURSE |
| | ENDSCHALTER |
| | MICRO FIN DE CARRERA |
| **227-0107-0** | |
| | RUOTA TRAINO SUL PIANO |
| | FEED WHEEL ON THE TABLE |
| | ROUE ENTRAINEMENT SUR LA TABLE |
| | DURCHZUGRAD AUF DEM TISCH |
| | RUEDA ARRASTRE EN LA MESA |
| **227-0107-5** | |
| | RUOTA TRAINO SUL PIANO |
| | FEED WHEEL ON THE TABLE |
| | ROUE ENTRAINEMENT SUR LA TABLE |
| | DURCHZUGRAD AUF DEM TISCH |
| | RUEDA ARRASTRE EN LA MESA |
| **227-0108-0** | |
| | SCATOLA LUBRIFICAZIONE CENTRALIZZATA |
| | CENTRALIZED LUBRICATION BOX |
| | BOITE LUBRIFICATION CENTRALISEE |
| | KASTEN ZUR ZENTRALSCHMIERUNG |
| | CAJA LUBRIFICACION |
| **227-0109-0** | |
| | RULLO MOTORIZZATO SUL BASAMENTO |
| | MOTORIZED ROLLER |
| | ROULEAU MOTORISE |
| | MOTORBETRIEBENE ROLLE |
| | RODILLO MOTORIZADO |
| **227-0201-0** | |
| | PIANI FISSI |
| | FIXED TABLES |
| | TABLES FIXES |
| | FESTTISCHE |
| | MESAS FIXES |
| **227-0201-1** | |
| | PIANI FISSI |
| | FIXED TABLES |
| | TABLES FIXES |
| | FESTTISCHE |
| | MESAS FIXES |
| **227-0201-5** | |
| | PIANI FISSI (SOFFIO ARIA) |
| | FIXED TABLES |
| | TABLES FIXES |
| | FESTTISCHE |
| | MESAS FIXES |
| **227-0202-0** | |
| | PIANI FISSI CROMATI |
| | CHROMIUM PLATED FIXED TABLES |
| | TABLES FIXES CHROMEES |
| | VERCHROMTE FESTTISCHE |
| | MESAS FIJAS CROMADAS |
| **227-0202-5** | |
| | PIANI FISSI CROMATI (SOFFIO ARIA) |
| | CHROMIUM PLATED FIXED TABLES |
| | TABLES FIXES CHROMEES |
| | VERCHROMTE FESTTISCHE |
| | MESAS FIJAS CROMADAS |
| **227-0203-0** | |
| | PIANI SCANALATI |
| | GROOVED TABLES |
| | TABLES CANNELEES |
| | GENUTETE TISCHE |
| | MESAS SCANALATI |
| **227-0204-0** | |
| | PIANI FISSI (UNIVERSALE) |
| | FIXED TABLES (UNIVERSAL) |
| | TABLES FIXES (UNIVERSEL) |
| | FESTTISCHE (UNIVERSALAGGR.) |
| | MESAS FIXES (UNIVERSAL) |
| **227-0204-X** | |
| | PIANI X UNIV. ELETTROM. COLOMBO |
| | TABLES CCOLOMBO) |
| | TABLES (COLOMBO) |
| | TISCH (COLOMBO) |
| | MESAS (COLOMBO) |
| **227-0205-0** | |
| | PIANI FISSI CROMATI (UNIVERSALE) |
| | CHROMIUM PLATED FIXED TABLES (UNIVER.) |
| | TABLES FIXES CHROMEES (GROUPE UNIVERSEL) |
| | VERCHROMTE FESTTISCHE (UNIVERSALAGGR.) |
| | MESAS FIJAS CROMADAS (UNIVERSAL) |

| Codice/Code | Descr./Beschr./Denom. |
|---|---|
| **227-0206-0** | |
| | PIANI SCANALATI (UNIVERSALE) |
| | GROOVED TABLES (UNIVERSAL) |
| | TABLES CANNELEES (UNIVERSEL) |
| | GENUTETE TISCHE (UNIVERSALAGGR.) |
| | MESAS SCANALATI (UNIVERSAL) |
| **227-0207-0** | |
| | PIANO IN ENTRATA (REGOLAZIONI) |
| | INFEED TABLE |
| | TABLE EN ENTREE |
| | AUFGABETISCH |
| | MESA DE ENTRADA |
| **227-0208-0** | |
| | PIANO IN ENTRATA |
| | INFEED TABLE |
| | TABLE EN ENTREE |
| | AUFGABETISCH |
| | MESA DE ENTRADA |
| **227-0210-0** | |
| | PIANI |
| | TABLES |
| | TABLES |
| | TISCH |
| | MESAS |
| **227-0211-0** | |
| | PIANI CON INSERTI |
| | TABLES WITH INSERTS |
| | TABLES AVEC PIECES INTERCALAIRES |
| | TISCHE MIT EINSAETZEN |
| | MESAS CON ELEMENTOS |
| **227-0301-0** | |
| | LUBRIFICAZIONE PIANO |
| | WORKTABLE LUBRICATION |
| | GRAISSAGE DU PLAN DE TRAVAIL |
| | TISCHSCHMIERUNG |
| | LUBRIFICACION MESA |
| **227-0401-0** | |
| | COMPONENTI PNEUMATICI |
| | PNEUMATIC COMPONENTS |
| | COMPOSANTS PNEUMATIQUES |
| | PNEUMATISCHE BESTANDTEILE |
| | COMPONENTES NEUMATICOS |
| **227-0402-0** | |
| | CONTA ORE |
| | HOUR-METER |
| | COMPTEUR DE HEURES |
| | STUNDENZAEHLER |
| | CUENTAHORAS |
| **227-0403-0** | |
| | MOLTIPLICATORE DI PRESSIONE |
| | RELISHING UNIT |
| | MULTIPLICATEUR |
| | AUFSATZGETRIEBE |
| | MULTIPLICADOR |
| **227-0501-0** | |
| | CABINA ANTIRUMORE |
| | SOUNDPROOF BOOTH |
| | CABINE INSONORISANTE |
| | SCHALLSCHUTZKABINE |
| | CABINA ANTI-RUIDOS |
| **227-0501-5** | |
| | CABINA ANTIRUMORE |
| | SOUNDPROOF BOOTH |
| | CABINE INSONORISANTE |
| | SCHALLSCHUTZKABINE |
| | CABINA ANTI-RUIDOS |
| **227-0502-0** | |
| | CABINA ANTIRUMORE |
| | SOUNDPROOF BOOTH |
| | CABINE INSONORISANTE |
| | SCHALLSCHUTZKABINE |
| | CABINA ANTI-RUIDOS |
| **227-0503-0** | |
| | CABINA ANTIRUMORE |
| | SOUNDPROOF BOOTH |
| | CABINE INSONORISANTE |
| | SCHALLSCHUTZKABINE |
| | CABINA ANTI-RUIDOS |
| **227-0504-0** | |
| | CABINA ANTIRUMORE |
| | SOUNDPROOF BOOTH |
| | CABINE INSONORISANTE |
| | SCHALLSCHUTZKABINE |
| | CABINA ANTI-RUIDOS |
| **227-0504-5** | |
| | CABINA ANTIRUMORE |
| | SOUNDPROOF BOOTH |
| | CABINE INSONORISANTE |
| | SCHALLSCHUTZKABINE |
| | CABINA ANTI-RUIDOS |
| **227-0505-0** | |
| | CABINA ANTIRUMORE |
| | SOUNDPROOF BOOTH |
| | CABINE INSONORISANTE |
| | SCHALLSCHUTZKABINE |
| | CABINA ANTI-RUIDOS |
| **227-0506-0** | |
| | CABINA ANTIRUMORE |
| | SOUNDPROOF BOOTH |
| | CABINE INSONORISANTE |
| | SCHALLSCHUTZKABINE |
| | CABINA ANTI-RUIDOS |
| **227-0507-0** | |
| | COLONNA |
| | COLUMN |
| | MONTANT |
| | SAEULE |
| | COLUMNA |
| **227-0520-0** | |
| | INDICATORE GRAVITAZIONALE |
| | GRAVITIONAL INDICATOR |
| | INDICATEUR GRAVITATTONEL |
| | SCHWEREZEIGER |
| | INDICADOR GRAVITACIONAL |
| **227-0601-0** | |
| | GUIDA IN ENTRATA A PARALLELOGRAMMA |
| | PARALLELOGRAM INFEED FENCE |
| | GUIDE ENTREE A PARALLELOGRAMME |
| | PARALLELOGRAMM - FUEGELINEAL |
| | GUIA ENTRADA A PARALELOGRAMA |
| **227-0602-0** | |
| | GUIDA |
| | FENCE |
| | GUIDE |
| | ANSCHLAG |
| | GUIA |

| Codice/Code | Descr./Beschr./Denom. |
|---|---|
| **227-0603-0** | |
| | GUIDA |
| | FENCE |
| | GUIDE |
| | ANSCHLAG |
| | GUIA |
| **227-0603-X** | |
| | GUIDA PER INSERIM. PEZZI CON TRASLATORE |
| | AUTOMATIC FEED FENCE |
| | GUIDE INSERTION PIECES AUTOMATIQUE |
| | ANSCHLAG FUER AUT. STUECKEINLEGEN |
| | GUIA PARA INTROD. PIEZAS CON TRANSLADOR |
| **227-0604-0** | |
| | GUIDE DI DESTRA |
| | RIGHT FENCES |
| | GUIDES A DROITE |
| | RECHTE ANSCHLAEGE |
| | GUIAS DERECHA |
| **227-0604-5** | |
| | GUIDE DI DESTRA |
| | RIGHT FENCES |
| | GUIDES A DROITE |
| | RECHTE ANSCHLAEGE |
| | GUIAS DERECHA |
| **227-0605-0** | |
| | GUIDE DI DESTRA CON PIANO SCANALATO |
| | RIGHT FENCES WITH GROOVED TABLE |
| | GRUIDES A DROITE TABLE CANNELEE |
| | RECHTE ANSCHLAEGE GENUTETER TISCH |
| | GUIAS DERECHA CON MESA ACANALADA |
| **227-0606-0** | |
| | GUIDA PER RECUPERO LISTELLO |
| | FENCE FOR GLAZE BEAD RECOVERY UNIT |
| | GUIDE RECUPERATION PARE-CLOSE |
| | ANSCHLAG ZUM GLASLEISTEN-RUECKGEWINNEN |
| | GUIA PARA RECUPERACION JUNQUILLO |
| **227-0607-0** | |
| | GUIDE DI DESTRA (UNIVERSALE) |
| | RIGHT FENCES (UNIVERSAL) |
| | GUIDES A DROITE (UNIVERSEL) |
| | RECHTE ANSCHLAGE (UNIVERSALAGGR.) |
| | GUIAS DERECHA (UNIVERSAL) |
| **227-0608-0** | |
| | GUIDE DI DESTRA CON PIANO SCANALATO(UN.) |
| | RIGHT FENCES WITH GROOVED TABLE (UN.) |
| | GUIDES A DROITE AVEC TABLE RAINUREE (UN. |
| | RECHTE ANSCHLAEGE MIT GENUTETEM TISCH(UN |
| | GUIAS DERECHA CON MESA ACANALADA(UN.) |
| **227-0609-0** | |
| | GUIDA SINISTRA IN USCITA (UNIV.) |
| | LEFT OUTLET FENCE |
| | GUIDE GAUCHE EN SORTIE |
| | LINKER AUSGABEANSCHLAG |
| | GUIA IZQUIERDA EN SALIDA |
| **227-0610-0** | |
| | GUIDE DI DESTRA (PRL) |
| | RIGHT FENCES |
| | GUIDES A DROITE |
| | RECHTE ANSCHLAGE |
| | GUIAS DERECHA |
| **227-0611-0** | |
| | GUIDA SINISTRA IN USCITA (CLASS) |
| | LEFT OUTLET FENCE |
| | GUIDE GAUCHE EN SORTIE |
| | LINKER AUSGABEANSCHLAG |
| | GUIA IZQUIERDA EN SALIDA |
| **227-0701-0** | |
| | TRAVERSA - TRAINO |
| | TRAVERSE - FEED |
| | TRAVERSE - ENTRAINEMENT |
| | QUERTRAEGER - VORSCHUB |
| | PUENTE - ARRASTRE |
| **227-0701-5** | |
| | TRAVERSA - TRAINO |
| | TRAVERSE - FEED |
| | TRAVERSE - ENTRAINEMENT |
| | QUERTRAEGER - VORSCHUB |
| | PUENTE - ARRASTRE |
| **227-0702-0** | |
| | MOTORIZZAZIONE SOLLEVAMENTO |
| | LIFTING MOTORIZATION UNIT |
| | MOTORISATION |
| | HUBMOTORISIERUNG |
| | MOTORIZACION ELEVACION |
| **227-0703-0** | |
| | SOLLEVAMENTO TRAVERSA (MOTORIZZAZIONE) |
| | TRAVERSE LIFTING (MOTORIZATION) |
| | SOULEVEMENT TRAVERSE MOTORISATION |
| | QUERTRAEGERHUB (MOTORISIERUNG) |
| | ELEVACION PUENTE |
| **227-0703-X** | |
| | SOLLEVAMENTO TRAVERSA (MOTORIZZAZIONE) |
| | TRAVERSE LIFTING (MOTORIZATION) |
| | SOULEVEMENT TRAVERSE MOTORISATION |
| | QUERTRAEGERHUB (MOTORISIERUNG) |
| | ELEVACION TRAVESAÑO (MOTORIZACION) |
| **227-0704-0** | |
| | SOLLEVAMENTO TRAVERSA (1 COLONNA) |
| | TRAVERSE LIFTING (1 ST COLUMN) |
| | SOULEVEMENT TRAVERSE (1 ERE COLONNE) |
| | QUERTRAEGERHUB (1 SAEULE) |
| | ELEVACION TRAVESAÑO (1ºCOLUMNA) |
| **227-0705-0** | |
| | SOLLEVAMENTO TRAVERSA (1 ORIZZ.SUP.STD) |
| | TRAVERSE LIFTING (1 ST TOP HOR. SPINDLE) |
| | SOULEVEMENT TRAVERSE (1 ARBRE HOR.SUP.) |
| | QUERTRAEGERHUB (1 OBERE HOR. WELLE) |
| | ELEVACION TRAVESAÑO (1ºHORIZ.SUP.STD) |
| **227-0706-0** | |
| | SOLLEVAMENTO TRAVERSA (1 ORIZZ.SUP.CNC) |
| | TRAVERSE LIFT.(1 ST TOP HOR.SPINDLE CNC) |
| | SOULEVEMENT TRAV.(1 ARBRE HOR.SUP.CNC) |
| | QUERTRAEGERHUB (1 OBERE HOR. WELLE CNC) |
| | ELEVACION TRAVESAÑO (1ºHORIZ.SUP.CNC) |
| **227-0707-0** | |
| | TRAVERSA - TRAINO (1-5) |
| | TRAVERSE - FEED (1-5) |
| | TRAVERSE - ENTRAINEMENT (1-5) |
| | QUERTRAEGER - VORSCHUB (1-5) |
| | PUENTE - ARRASTRE (1-5) |
| **227-0707-5** | |
| | TRAVERSA - TRAINO (2-6) |
| | TRAVERSE - FEED (2-6) |
| | TRAVERSE - ENTRAINEMENT (2-6) |
| | QUERTRAEGER - VORSCHUB (2-6) |
| | PUENTE - ARRASTRE (2-6) |

| Codice/Code | Descr./Beschr./Denom. |
|---|---|
| **227-0708-0** | |
| | SCATOLA TRASMISSIONE |
| | GEAR BOX |
| | BOITE TRANSMISSION |
| | GETRIEBE |
| | CAJA TRANSMISION |
| **227-0709-0** | |
| | TRASMISSIONE MOTO AI RULLI SUL PIANO |
| | DRIVE TO ROLLES ON THE TABLE |
| | TANSMISSION AUX ROULEAUX SUR LA TABLE |
| | ANTRIEB AN WALZEN AUF DEM TISCH |
| | TRANSMISION MOV A RODILLOS EN LA MESA |
| **227-0710-0** | |
| | FORCELLA DX PER RULLI DI TRAINO STD |
| | RIGHT FORK FOR FEED ROLLERS (STANDARD) |
| | FOURCHE DROITE (ROULEAUX STANDARD) |
| | RECHTE GABEL FEUR DURCHZUGWALZEN |
| | HORQUILLA DX PARA RODILLOS DE ARRASTRE |
| **227-0711-0** | |
| | FORCELLA SX PER RULLI DI TRAINO STD |
| | LEFT FORK FOR FEED ROLLERS (STANDARD) |
| | FOURCHE GAUCHE (ROLLEAUX STANDARD) |
| | LINKF GABEL FEUR DURCHZUGWALZEN |
| | HORQUILLA SX PARA RODILLOS DE ARRASTRE |
| **227-0712-0** | |
| | FORCELLA DX PER R. DI TRAINO (FLANGIATA) |
| | RIGHT FORK FOR FEED ROLLERS (FLANGED) |
| | FOURCHE DROITE ROULEAUX A BRIDE) |
| | RECHTE FLANSCHGABEL (DURCHZUGWALZEN) |
| | HORQUILLA DX PARA R. DE ARRASTRE ANILLOS |
| **227-0713-0** | |
| | FORCELLA SX PER R. DI TRAINO (FLANGIATA) |
| | LEFT FORK FOR FEED ROLLERS (FLANGED) |
| | FOURCHE GAUCHE ROULEAUX (A BRIDE) |
| | LINKE FLANSCHGABEL (DURCHZUGWALZEN) |
| | HORQUILLA SX PARA R. DE ARRASTRE ANILLOS |
| **227-0714-0** | |
| | FORCELLA FLANG. LUNGA SX |
| | LONG FLANGED FORK (LEFT) |
| | FOURCHE A BRIDE LONGUE (GAUCHE) |
| | LANGE FLANSCHGABEL (LINK) |
| | HORQUILLA ANILLOS LARGA IZQUIERDA |
| **227-0715-0** | |
| | FORCELLA FLANGIATA LUNGA DX |
| | LONG FLANGED FORK (RIGHT) |
| | FOURCHE A BRIDE LONGUE (DROITE) |
| | LANGE FLANSCHGABEL (RECHT) |
| | HORQUILLA ANILLOS LARGA DERECHA |
| **227-0716-0** | |
| | FORCELLA TRAINO DX FL. TELESCOPICA |
| | TELESCOPIC FLANGED FEED FORK (RIGHT) |
| | FOURCHE A BRIDE TELECOPIQUE DROITE |
| | TELESKOPFLANSCHGABEL (RECHT) |
| | HORQUILLA ARRASTRE DER ANI. TELESCOPICA |
| **227-0717-0** | |
| | FORCELLA TRAINO SX FL. TELESCOPICA |
| | TELESCOPIC FLANGED FEED FORK (LEFT) |
| | FOURCHE A BRIDE TELESCOPIQUE GAUCHE |
| | TELESKOPFLANSCHGABEL (LINK) |
| | HORQUILLA ARRASTRE IZQ ANI TELESCOPICA |
| **227-0718-0** | |
| | ALBERO TRAINO FLANG. TELESCOPICO L=50 MM |
| | FLANGED FEED SHAFT (TELESCOPIC) L=50 MM |
| | ARBRE A BRIDE TELESCOPIQUE L=50 MM |
| | TELESKOPFLANSCHWELLE L=50 MM |
| | EJE ARRASTRE ANIL. TELESCOPICO L=50 |
| **227-0719-0** | |
| | SOLLEVAMENTO RUOTE DI TRAINO |
| | FEED WHEELS LIFTING UNIT |
| | GROUPE SOULEVEMENT ROUES ENTRAIN |
| | DURCHZUGRAEDERHUB |
| | ELEVACION RUEDAS DE ARRASTRE |
| **227-0719-X** | |
| | SOLLEVAMENTO RUOTE DI TRAINO |
| | FEED WHEELS LIFTING UNIT |
| | GROUPE SOULEVEMENT ROUES ENTRAIN |
| | DURCHZUGRAEDERHUB |
| | ELEVACION RUEDAS DE ARRASTRE |
| **227-0720-0** | |
| | RULLI DI TRAINO |
| | FEEDROLLERS |
| | ROULEAUX D'ENTRAINEMENT |
| | DURCHZUGWALZEN |
| | RODILLOS ARRASTRE |
| **227-0721-0** | |
| | TANDEM L=150 MM |
| | TANDEM L=150 MM |
| | TANDEM L=150 MM |
| | TANDEM L=150 MM |
| | TANDEM L=150 MM |
| **227-0722-0** | |
| | TANDEM L=150 MM |
| | TANDEM L=150 MM |
| | TANDEM L=150 MM |
| | TANDEM L=150 MM |
| | TANDEM L=150 MM |
| **227-0723-0** | |
| | TANDEM L=220 MM |
| | TANDEM L=220 MM |
| | TANDEM L=220 MM |
| | TANDEM L=220 MM |
| | TANDEM L=220 MM |
| **227-0723-X** | |
| | TANDEM L=220 MM |
| | TANDEM L=220 MM |
| | TANDEM L=220 MM |
| | TANDEM L=220 MM |
| | TANDEM L=220 MM |
| **227-0724-0** | |
| | TANDEM L=200 MM |
| | TANDEM L=200 MM |
| | TANDEM L=200 MM |
| | TANDEM L=200 MM |
| | TANDEM L=200 MM |
| **227-0725-0** | |
| | BATTUTA ESCLUDIBILE PER TTL |
| | DISAPPEARING STOP FOR TTL |
| | BUTEE A DISPARITION |
| | VERSCHWINDUNGSANSCHLALG FUER TTL |
| | TOPE EXCLUIBLE PARA TTL |
| **227-0727-0** | |
| | PRESSORE |
| | PRESSURE WHEEL |
| | PRESSEUR A ROUE |
| | DRUKRAD |
| | PRENSOR |

| Codice/Code | Descr./Beschr./Denom. |
|---|---|
| 227-0728-0 | RUOTE PRESSATORI PER UNIVERSALE<br>PRESSURE WHEELS FOR UNIVERSAL SPINDLE<br>PRESSEURS A ROUE ARBRE UNIVERSAL<br>DRUKRAEDER FEUR UNIVERSALWELLE<br>PRENSORES PARA UNIVERSAL |
| 227-0730-0 | COLONNA<br>COLUMN<br>MONTANT<br>SAEULE<br>COLUMNA |
| 227-0731-0 | BANDELLA IN ENTRATA (LIMITATORE)<br>LIMITING DEVICE (ENTY SIDE)<br>LIMITEUR (ENTREE)<br>BEGRENZER (EINLAUFSEITE)<br>LAMINA EN ENTRADA |
| 227-0732-0 | BANDELLA IN ENTRATA CON TTL<br>LIMITING DEVICE (ENTRY SIDE) WITH TTL<br>LIMITEUR ENTREE AVEC TTL<br>BEGRENZER MIT TTL (EINLAUFSEITE)<br>LAMINA EN ENTRADA CON TTL |
| 227-0733-0 | DISP. DI SICUREZZA C/MARTELLETTI ANTIRIT<br>ANTI-KICKBACK FINGERS UNIT<br>GROUPE DOIGTS ANTIRECUIL<br>RUECKSCHLAGFINGER<br>DISP. DE SEGURIDAD C/MARTINETES ANTIREGR |
| 227-0735-0 | MOTOVARIATORE<br>MOTOR CONVERTER<br>MOTOVARIATEUR<br>VERSTELLGETRIEBEMOTOR<br>MOTOVARIADOR |
| 227-0736-0 | MOTOVARIATORE 6-36M/MIN<br>MOTOR CONVERTER 6-36M/MIN<br>MOTOVARIATEUR 6-36M/MIN<br>VERSTELLGETRIEBEMOTOR 6-36M/MIN<br>MOTOVARIADOR 6-36M/MIN |
| 227-0740-0 | RINVIO TRAINO UNIVERSALE<br>FEED TRANSMISSION (UNIVERSAL SPINDLE)<br>RENVOI ENTAINEMENT ARBRE UNIVERSAL<br>DURCHZUGVORGELEGE (UNIVERSALWELLE)<br>REENVIO ARRASTRE UNIVERSAL |
| 227-0741-0 | MICRO ANTICOLLISIONE<br>MICROSWITCH (ANTICOLLISION)<br>MICROINTERRUPTER (ANTICOLLISION)<br>MIKROSCHALTER (KOLLISIONSSCHUTZ)<br>MICRO ANTICHOQUE |
| 227-0750-0 | CONTA METRI<br>METER-COUNTER<br>COMPTEUR METRIQUE<br>METERZAEHLER<br>CONTA METROS |
| 227-0755-0 | COLTELLI DIVISORI<br>RIVING KNIVES<br>COUTEAUX DIVISEURS<br>SPALTKEIL<br>CUCHILLAS DIVISORIAS |
| 227-0760-0 | REGISTRAZIONE MOTORIZZATA RUOTE TRAINO<br>POWER ADJUSTMENT FOR FEED WHEELS<br>REGLAGE MOTORISE ROUES ENTRAINEMENT<br>MOTORBETR. EINSTELLUNG (DURCHZUGRAEDER)<br>REGULACION MOTORIZADA RUEDAS ARRASTRE |
| 227-0760-K | REGISTRAZIONE MOTORIZZATA RUOTE TRAINO<br>POWER ADJUSTMENT FOR FEED WHEELS<br>REGLAGE MOTORISE ROUES ENTRAINEMENT<br>MOTORBETR. EINSTELLUNG (DURCHZUGRAEDER)<br>REGULACION MOTORIZADA RUEDAS ARRASTRE |
| 227-0760-X | REGISTRAZIONE MOTORIZZATA RUOTE TRAINO<br>POWER ADJUSTMENT FOR FEED WHEELS<br>REGLAGE MOTORISE ROUES ENTRAINEMENT<br>MOTORBETR. EINSTELLUNG (DURCHZUGRAEDER)<br>REGULACION MOTORIZADA RUEDAS ARRASTRE |
| 227-0760-Y | REGISTRAZIONE MOTORIZZATA RUOTE TRAINO<br>POWER ADJUSTMENT FOR FEED WHEELS<br>REGLAGE MOTORISE ROUES ENTRAINEMENT<br>MOTORBETR. EINSTELLUNG (DURCHZUGRAEDER)<br>REGULACION MOTORIZADA RUEDAS ARRASTRE |
| 227-0760-Z | REGISTRAZIONE MOTORIZZATA RUOTE TRAINO<br>POWER ADJUSTMENT FOR FEED WHEELS<br>REGLAGE MOTORISE ROUES ENTRAINEMENT<br>MOTORBETR. EINSTELLUNG (DURCHZUGRAEDER)<br>REGULACION MOTORIZADA RUEDAS ARRASTRE |
| 227-0770-0 | GR. SPIGOLATORE<br>CORNER CHAMFERING UNIT<br>GROUPE DE CHANFREINAGE DERRIERE ARBRE HO<br>FASEAGGREGAT |
| 227-0801-0 | ACCESSORI A CORREDO<br>STANDARD ACCESSORIES<br>ACCESSOIRES STANDARD<br>STANDARD ZUBEHOER<br>ACCESORIOS DE EQUIPAMIENTO |
| 227-0802-0 | ACCESSORI A CORREDO<br>STANDARD ACCESSORIES<br>ACCESSOIRES STANDARD<br>ZUBEHOER<br>ACCESORIOS DE EQUIPAMIENTO |
| 227-0803-0 | TARGHE<br>RATING PLATES<br>PLAQUES<br>SCHILDER<br>TARJETA |
| 227-1100-0 | GRUPPO PIALLA<br>SURFACING UNIT<br>GROUPE DEGAUCHISSEUSE<br>ABRICHTE<br>CEPILLO |

| Codice/Code | Descr./Beschr./Denom. |
|---|---|
| **227-1101-0** | |
| | SLITTA |
| | SLIDE |
| | GLISSIERE |
| | SCHLITTEN |
| | TRINEO |
| **227-1102-0** | |
| | POSIZIONAMENTO ORIZZONTALE MANUALE |
| | MANUAL HORIZONTAL ADJUSTMENT |
| | REGLAGE HORIZONTAL MANUEL |
| | MANUELLE HORIZONTALVERSTELLUNG |
| | UBICACION HORIZONTAL MANUAL |
| **227-1103-0** | |
| | ALBERO PIALLA |
| | CUTTERBLOCK |
| | ARBRE PORTE-COUTEAUX |
| | MESSERWELLE |
| | EJE CEPILLO |
| **227-1104-0** | |
| | MOTORIZZAZIONE |
| | MOTORIZATION |
| | MOTORISATION |
| | MOTORISIERUNG |
| | MOTORIZACION |
| **227-1105-0** | |
| | POSIZIONAMENTO VERTICALE MANUALE |
| | MANUAL VERTICAL ADJUSTMENT |
| | REGLAGE VERTICAL MANUEL |
| | MANUELLE VERTIKALVERSTELLUNG |
| | UBICACION VERTICAL MANUAL |
| **227-1106-0** | |
| | POSIZIONAMENTO VERTICALE MANUALE |
| | MANUAL VERTICAL ADJUSTMENT |
| | REGLAGE VERTICAL MANUEL |
| | MANUELLE VERTIKALVERSTELLUNG |
| | UBICACION VERTICAL MANUAL |
| **227-1107-0** | |
| | TARGHE |
| | RATING PLATES |
| | PLAQUES |
| | SCHILDER |
| | TARJETA |
| **227-1200-0** | |
| | ALBERO TOUPIE DESTRO |
| | MOULDING SPINDLE (RIGHT) |
| | ARBRE TOUPIE (DROIT) |
| | FRAESSPINDEL (RECHT) |
| | EJE TUPI DERECHO |
| **227-1201-0** | |
| | SLITTA |
| | SLIDE |
| | GLISSIERE |
| | SCHLITTEN |
| | TRINEO |
| **227-1201-5** | |
| | SLITTA |
| | SLIDE |
| | GLISSIERE |
| | SCHLITTEN |
| | TRINEO |
| **227-1202-0** | |
| | POSIZIONAMENTO ORIZZONTALE MANUALE |
| | MANUAL HORIZONTAL ADJUSTMENT |
| | REGLAGE HORIZONTAL MANUEL |
| | MANUELLE HORIZONTALVERSTELLUNG |
| | UBICACION HORIZONTAL MANUAL |
| **227-1202-X** | |
| | POSIZIONAMENTO ORIZZONTALE |
| | HORIZONTAL ADJUSTMENT |
| | REGLAGE HORIZONTAL |
| | HORIZONTALVERSTELLUNG |
| | UBICACION HORIZONTAL |
| **227-1203-0** | |
| | ALBERO TOUPIE |
| | MOULDING SPINDLE |
| | ARBRE TOUPIE |
| | FRAESSPINDEL |
| | EJE TUPI |
| **227-1204-0** | |
| | MOTORIZZAZIONE |
| | MOTORIZATION |
| | MOTORISATION |
| | MOTORISIERUNG |
| | MOTORIZACION |
| **227-1205-0** | |
| | POSIZIONAMENTO VERTICALE |
| | VERTICAL ADJUSTMENT |
| | REGLAGE VERTICAL |
| | VERTIKALVERSTELLUNG |
| | UBICATION VERTICAL |
| **227-1206-0** | |
| | POSIZIONAMENTO VERTICALE MANUALE |
| | MANUAL VERTICAL ADJUSTMENT |
| | REGLAGE VERTICAL MANUEL |
| | MANUELLE VERTIKALVERSTELLUNG |
| | UBICACION VERTICAL MANUAL |
| **227-1207-0** | |
| | BLOCCAGGIO |
| | SHAFT CLAMPING UNIT |
| | GROUPE SERRAGE ARBRE |
| | SPINDELBLOCKIERUNG |
| | BLOQUED |
| **227-1208-0** | |
| | CUFFIA D'ASPIRAZIONE |
| | SUCTION HOOD |
| | HOTTE D'ASPIRATION |
| | ABSAUGHAUBE |
| | CAMPANA DE ASPIRACION |
| **227-1209-0** | |
| | POSIZIONAMENTO VERTICALE |
| | VERTICAL ADJUSTMENT |
| | REGLAGE VERTICAL |
| | VERTIKALVERSTELLUNG |
| | UBICATION VERTICAL |
| **227-1300-0** | |
| | ALBERO TOUPIE SINISTRO |
| | MOULDING SPINDLE (LEFT) |
| | ARBRE TOUPIE (GAUCHE) |
| | FREASSPINDEL (LINK) |
| | * |
| **227-1301-0** | |
| | SLITTA |
| | SLIDE |
| | GLISSIERE |
| | SCHLITTEN |
| | TRINEO |

| Codice/Code | Descr./Beschr./Denom. |
|---|---|
| **227-1302-0** | POSIZIONAMENTO DIAMETRO UTENSILE<br>ADJUSTMENT ACCORDING TO TOOL DIAMETER<br>REGLAGE SUIVANT DIAMETRE OUTIL<br>VERSTELLUNG NACH NERKZEUGDURCHMESSER<br>UBICACION DIAMETRO UTENSILIO |
| **227-1303-0** | SLITTA DEL POSIZIONAMENTO DIAM. UTENSILE<br>SLIDE (ADJUST. FOR TOOL DIAMETER)<br>GLISSIERE REGLAGE SUIVANT DIAM. OUTIL<br>SCHLITTEN (VERST. NACH NERKZEUGDURCH)<br>TRINEO DE LA UBICACION DIAM. UTENSILIO |
| **227-1303-5** | SLITTA DEL POSIZIONAMENTO DIAM. UTENSILE<br>SLIDE (ADJUST. FOR TOOL DIAMETER)<br>GLISSIERE REGLAGE SUIVANT DIAM. OUTIL<br>SCHLITTEN (VERST. NACH NERKZEUGDURCH)<br>TRINEO DE LA UBICACION DIAM. UTENSILIO |
| **227-1304-0** | ALBERO TOUPIE<br>MOULDING SPINDLE<br>ARBRE TOUPIE<br>FRAESSPINDEL<br>EJE TUPI |
| **227-1305-0** | MOTORIZZAZIONE<br>MOTORIZATION<br>MOTORISATION<br>MOTORISIERUNG<br>MOTORIZACION |
| **227-1306-0** | POSIZIONAMENTO VERTICALE<br>VERTICAL ADJUSTMENT<br>REGLAGE VERTICAL<br>VERTIKALVERSTELLUNG<br>UBICATION VERTICAL |
| **227-1307-0** | POSIZIONAMENTO VERTICALE MANUALE<br>MANUAL VERTICAL ADJUSTMENT<br>REGLAGE VERTICAL MANUEL<br>MANUELLE VERTIKALVERSTELLUNG<br>UBICACION VERTICAL MANUAL |
| **227-1308-0** | POSIZIONAMENTO ORIZZONTALE MANUALE<br>MANUAL HORIZONTAL ADJUSTMENT<br>REGLAGE HORIZONTAL MANUEL<br>MANUELLE HORIZONTALVERSTELLUNG<br>UBICACION HORIZONTAL MANUAL |
| **227-1309-0** | POSIZIONAMENTO ORIZZONTALE ASSE CONTINUO<br>CONTINUOUS AXIS HORIZONTAL ADJUSTING<br>REGLAGE HORIZONTAL AXE CONTINU<br>HORIZONTALVERSTELLUNG MIT KONT. ACHSE<br>UBICACION HORIZONTAL A EJE CONTINUO |
| **227-1309-1** | POSIZIONAMENTO ORIZZONTALE 4 ASSI<br>HORIZONTAL POSITIONING 4-AXES<br>POSITIONNEMENT HORIZONTAL 4 AXES<br>HORIZONTALE POSITIONERUNG 4 ACHSEN<br>UBICACION HORIZONTAL A 4 EJES |
| **227-1310-0** | BLOCCAGGIO VERTICALE<br>VERTICAL UNIT LOCKING<br>SERRAGE VERTICAL GROUPE<br>VERT. BLOCKIERUNG DES AGGREGATES<br>BLOQUEO VERTICAL |
| **227-1311-0** | BLOCCAGGIO ORIZZONTALE<br>HORIZONTAL UNIT LOCKING<br>SERRAGE HORIZONTAL GROUPE<br>HORIZ. BLOCKIERUNG DES AGGREGATES<br>BLOQUEO HORIZONTAL |
| **227-1312-0** | CUFFIA D'ASPIRAZIONE (V.S.)<br>SUCTION HOOD<br>HOTTE D'ASPIRATION<br>ABSAUGHAUBE<br>CAMPANA DE ASPIRACION (V.I.) |
| **227-1313-0** | RUOTA DI PRESSIONE LATERALE<br>LATERAL PRESSURE WHEEL<br>ROUE PRESSION LATERALE<br>SEITENDRUKRAD<br>RUEDA DE PRESION LATERAL |
| **227-1314-0** | PRESSATORE ORIZZONTALE ESCLUSIONE PNEUM.<br>HORIZ. PRESSER (PNEUM SWITCHING OFF)<br>PRESSEUR HORIZ. EXCLUSION PNEUM.<br>HOR. DRUCKELEMENT (PNEUM. AUSSCHALTEN)<br>PRENSOR HORIZONTAL EXCLUSION PNEUM. |
| **227-1315-0** | PIASTRA E CHIUSURA BANDELLA<br>COVER UNIT<br>GROUPE COUVERCLE<br>ABDECKUNG<br>PLANCHA Y CERRADO LAMINA |
| **227-1316-0** | GUIDA SINISTRA IN USCITA<br>LEFT FENCE (EXIT SIDE)<br>GUIDE GAUCHE EN SORTIE<br>LINKER AUSGABEANSCHLAG<br>GUIA IZQUIERDA EN SALIDA |
| **227-1317-0** | GRUPPO SCATOLA TTL<br>TTL BOX UNIT<br>GROUPE BOITE TTL<br>KASTEN TTL<br>GRUPO CAJA TTL |
| **227-1318-0** | POSIZIONAMENTO VERTICALE<br>VERTICAL ADJUSTMENT<br>REGLAGE VERTICAL<br>VERTIKALVERSTELLUNG<br>UBICATION VERTICAL |
| **227-1319-0** | POSIZIONAMENTO ORIZZONTALE "TTL"<br>"TTL" HORIZONAL ADJUSTMENT<br>REGLAGE HORIZONTAL "TTL"<br>"TTL" HORIZONTALVERSTELLUNG<br>UBICACION HORIZONTAL "TTL" |
| **227-1320-0** | POSIZIONAMENTO ORIZZONTALE<br>HORIZONTAL ADJUSTMENT<br>REGLAGE HORIZONTAL<br>HORIZONTALVERSTELLUNG<br>UBICACION HORIZONTAL |

| Codice/Code | Descr./Beschr./Denom. |
|---|---|
| **227-1321-0** | PRESSATORE IN USCITA (VERSIONE "TTL")<br>PRESSER (EXIT SIDE) ("TTL" VERSION")<br>PRESSEUR EN SORTIE (VERSION "TTL")<br>AUSGANGSDRUCKELEMENT ("TTL" VERSION)<br>PRENSOR EN SALIDA ("TTL" VERSION) |
| **227-1322-0** | DISPOSITIVO ANTICOLLISIONE<br>EMERGENCY DEVICE<br>DISPOSITIF D'URGENCE<br>NOT-AUS-VORRICHTUNG<br>DISPOSITIVO DE EMERGENCIA |
| **227-1400-0** | ALBERO ORIZZONTALE SUPERIORE<br>TOP HORIZONTAL SPINDLE<br>ARBRE HORIZONTAL SUPERIEUR<br>OBERE HORIZONTALWELLE<br>EJE HORIZONTAL SUPERIOR |
| **227-1401-0** | SLITTA<br>SLIDE<br>GLISSIERE<br>SCHLITTEN<br>TRINEO |
| **227-1402-0** | POSIZIONAMENTO ORIZZONTALE MANUALE<br>MANUAL HORIZONTAL ADJUSTMENT<br>REGLAGE HORIZONTAL MANUEL<br>MANUELLE HORIZONTALVERSTELLUNG<br>UBICACION HORIZONTAL MANUAL |
| **227-1403-0** | ALBERO PIALLA<br>CUTTERBLOCK<br>ARBRE PORTE-COUTEAUX<br>MESSERWELLE<br>EJE CEPILLO |
| **227-1404-0** | MOTORIZZAZIONE<br>MOTORIZATION<br>MOTORISATION<br>MOTORISIERUNG<br>MOTORIZACION |
| **227-1405-0** | POSIZIONAMENTO VERTICALE MANUALE<br>MANUAL VERTICAL ADJUSTMENT<br>REGLAGE VERTICAL MANUEL<br>MANUELLE VERTIKALVERSTELLUNG<br>UBICACION VERTICAL MANUAL |
| **227-1406-0** | POSIZIONAMENTO ORIZZONTALE MANUALE<br>MANUAL HORIZONTAL ADJUSTMENT<br>REGLAGE HORIZONTAL MANUEL<br>MANUELLE HORIZONTALVERSTELLUNG<br>UBICACION HORIZONTAL MANUAL |
| **227-1407-0** | CUFFIA D'ASPIRAZIONE (O.S.)<br>SUCTION HOOD (TOP HORIZ. SPINDLE)<br>HOTTE D'ASPIRATION (ARBRE HORIZ. SUP.)<br>ABSAUGHAUBE<br>CAMPANA DE ASPIRACION (H.S) |
| **227-1407-1** | CUFFIA D'ASPIRAZIONE (O.S.)<br>SUCTION HOOD (TOP HORIZ. SPINDLE)<br>HOTTE D'ASPIRATION (ARBRE HORIZ. SUP.)<br>ABSAUGHAUBE<br>CAMPANA DE ASPIRACION (H.S) |
| **227-1408-0** | PRESSATORE IN USCITA<br>OUTLET HOLD-DOWN UNIT<br>PRESSEUR EN SORTIE<br>AUSGANGSDRUCKELEMENT<br>PRENSOR EN SALIDA |
| **227-1408-X** | PRESSATORI (O.S.)<br>PRESSERS<br>PRESSEURS<br>DRUCKELEMENTE<br>PRENSORES (H.S.) |
| **227-1409-0** | SEPARATORE DI LISTELLO DX CON O.S.<br>RIGHT GLAZE BEAD SEPARATOR<br>SEPARATEUR PARE-CLOSE DROIT<br>RECHTE GLASLEISTENTRENNVORRICHTUNG<br>SEPARADOR DE JUNQUILLO DX CON O.S. |
| **227-1410-0** | PRESSATORE IN USCITA SEZIONATO<br>SECTIONAL PRESSER (EXIT SIDE)<br>PRESSEUR SECTIONNE (SORTIE)<br>GLIEDER DRUCKELEMENT (EINGABESEITE)<br>PRENSOR EN SALIDA SECCIONADO |
| **227-1411-0** | PRESSATORE IN ENTRATA<br>PRESSER (ENTRY SIDE)<br>PRESSEUR EN ENTREE<br>DRUCKELEMENT (EINGABESEITE)<br>PRENSOR EN ENTRADA |
| **227-1411-X** | PRESSATORE IN ENTRATA CROMATO<br>PRESSER (ENTRY SIDE)<br>PRESSEUR EN ENTREE<br>DRUCKELEMENT (EINGABESEITE)<br>PRENSOR EN ENTRADA |
| **227-1412-0** | PRESSATORE PNEUMATICO IN ENTRATA<br>PNEUM. PRESSER (ENTRY SIDE)<br>PRESSEUR PNEUM. EN ENTREE<br>PNEUM. DRUCKELEMENT (EINGABESEITE)<br>PRENSOR NEUMATICO EN ENTRADA |
| **227-1413-0** | PRESSATORE (TTL)<br>PRESSER (TTL)<br>PRESSEUR (TTL)<br>DRUCKELEMENT (TTL)<br>PRENSOR (TTL) |
| **227-1420-0** | ALBERO ORIZZONTALE SUPERIORE<br>TOP HORIZONTAL SPINDLE<br>ARBRE HORIZONTAL SUPERIEUR<br>OBERE HORIZONTALWELLE<br>EJE HORIZONTAL SUPERIOR |
| **227-1421-0** | CUFFIA D'ASPIRAZIONE (O.S.)<br>SUCTION HOOD (TOP HORIZ. SPINDLE)<br>HOTTE D'ASPIRATION (ARBRE HORIZ. SUP.)<br>ABSAUGHAUBE<br>CAMPANA DE ASPIRACION (H.S) |

| Codice/Code | Descr./Beschr./Denom. |
|---|---|
| **227-1422-0** | |
| | PRESSATORI (O.S.) |
| | PRESSERS |
| | PRESSEURS |
| | DRUCKELEMENTE |
| | PRENSORES (H.S.) |
| **227-1423-0** | |
| | PRESSATORE IN ENTRATA (O.S. DX) |
| | PRESSER (ENTRY SIDE) |
| | PRESSEUR EN ENTREE |
| | DRUCKELEMENT (EINGABESEITE) |
| | PRENSOR EN ENTRADA |
| **227-1424-0** | |
| | PRESSATORE IN ENTRATA (O.S. SX) |
| | PRESSER (ENTRY SIDE) |
| | PRESSEUR EN ENTREE |
| | DRUCKELEMENT (EINGABESEITE) |
| | PRENSOR EN ENTRADA |
| **227-1425-0** | |
| | POSIZIONAMENTO VERTICALE MANUALE |
| | MANUAL VERTICAL ADJUSTMENT |
| | REGLAGE VERTICAL MANUEL |
| | MANUELLE VERTIKALVERSTELLUNG |
| | UBICACION VERTICAL MANUAL |
| **227-1426-0** | |
| | POSIZIONAMENTO ORIZZONTALE MANUALE |
| | MANUAL HORIZONTAL ADJUSTMENT |
| | REGLAGE HORIZONTAL MANUEL |
| | MANUELLE HORIZONTALVERSTELLUNG |
| | UBICACION HORIZONTAL MANUAL |
| **227-1427-0** | |
| | POSIZIONAMENTO VERTICALE MANUALE |
| | MANUAL VERTICAL ADJUSTMENT |
| | REGLAGE VERTICAL MANUEL |
| | MANUELLE VERTIKALVERSTELLUNG |
| | UBICACION VERTICAL MANUAL |
| **227-1428-0** | |
| | PRESSATORE IN USCITA (comp.31) |
| | OUTLET HOLD-DOWN UNIT |
| | PRESSEUR EN SORTIE |
| | AUSGANGSDRUCKELEMENT |
| | PRENSOR EN SALIDA |

| Codice/Code | Descr./Beschr./Denom. |
|---|---|
| **227-1500-0** | |
| | ALBERO ORIZZONTALE INFERIORE |
| | BOTTON HORIZONTAL SPINDLE |
| | ARBRE HORIZONTAL INFERIEUR |
| | UNTERE HORIZONTALWELLE |
| | EJE HORIZONTAL INFERIOR |
| **227-1501-0** | |
| | SLITTA |
| | SLIDE |
| | GLISSIERE |
| | SCHLITTEN |
| | TRINEO |
| **227-1501-X** | |
| | POSIZIONAMENTO ORIZZONTALE ASSE CONTINUO |
| | HORIZONTAL ADJUSTING (CONTINUOUS AXIS) |
| | REGLAGE HORIZONTAL AXE CONTINU |
| | HORIZONTALVERSTELLUNG MIT KONT. ACHSE |
| | UBICACION HORIZONTAL A EJE CONTINUO |
| **227-1502-0** | |
| | POSIZIONAMENTO ORIZZONTALE MANUALE |
| | MANUAL HORIZONTAL ADJUSTMENT |
| | REGLAGE HORIZONTAL MANUEL |
| | MANUELLE HORIZONTALVERSTELLUNG |
| | UBICACION HORIZONTAL MANUAL |
| **227-1503-0** | |
| | POSIZIONAMENTO ORIZZONTALE MANUALE |
| | MANUAL HORIZONTAL ADJUSTMENT |
| | REGLAGE HORIZONTAL MANUEL |
| | MANUELLE HORIZONTALVERSTELLUNG |
| | UBICACION HORIZONTAL MANUAL |
| **227-1504-0** | |
| | ALBERO PIALLA |
| | CUTTERBLOCK |
| | ARBRE PORTE-COUTEAUX |
| | MESSERWELLE |
| | EJE CEPILLO |
| **227-1505-0** | |
| | MOTORIZZAZIONE |
| | MOTORIZATION |
| | MOTORISATION |
| | MOTORISIERUNG |
| | MOTORIZACION |

| Codice/Code | Descr./Beschr./Denom. |
|---|---|
| **227-1506-0** | |
| | POSIZIONAMENTO VERTICALE MANUALE |
| | MANUAL VERTICAL ADJUSTMENT |
| | REGLAGE VERTICAL MANUEL |
| | MANUELLE VERTIKALVERSTELLUNG |
| | UBICACION VERTICAL MANUAL |
| **227-1507-0** | |
| | POSIZIONAMENTO VERTICALE MANUALE |
| | MANUAL VERTICAL ADJUSTMENT |
| | REGLAGE VERTICAL MANUEL |
| | MANUELLE VERTIKALVERSTELLUNG |
| | UBICACION VERTICAL MANUAL |
| **227-1508-0** | |
| | TARGHE |
| | RATING PLATES |
| | PLAQUES |
| | SCHILDER |
| | TARJETA |
| **227-1600-0** | |
| | GRUPPO OPERATORE UNIVERSALE |
| | UNIVERSAL HEAD UNIT |
| | GROUPE OPERATEUR UNIVERSEL |
| | UNIVERSALAGGREGAT |
| | GRUPO OPERADOR UNIVERSAL |
| **227-1600-5** | |
| | GRUPPO RECUPERO LISTELLO |
| | GLAZE BEAD RECOVERY UNIT |
| | GROUPE RECUPERATION PARA-CLOSE |
| | AGG. GLASLEISTENRUECKGEWINNEN |
| | GRUPO RECUPERACION JUNQUILLO |
| **227-1601-0** | |
| | ROTAZIONE TESTE (UNIVERSALE) |
| | HEAD ROTATION (UNIVERSAL UNIT) |
| | ROTATION TETE (GROUPE UNIVERSEL) |
| | KOPFDREHUNG (UNIVERSALAGGR.) |
| | ROTACION CABEZAL (UNIVERSAL) |
| **227-1602-0** | |
| | POSIZIONAMENTO ORIZZONTALE (UNIVERSALE) |
| | HORIZONTAL ADJUSTMENT (UNIVERSAL UNIT) |
| | REGLAGE HORIZONTAL (GROUPE UNIVERSAL) |
| | HORIZONTALVERSTELLUNG (UNIVERSALAGGR.) |
| | UBICACION HORIZONTAL (UNIVERSAL) |

| Codice/Code | Descr./Beschr./Denom. |
|---|---|
| 227-1603-0 | POSIZIONAMENTO VERTICALE (UNIVERSALE)<br>MANUAL VERTICAL ADJUSTMENT (UNIVERSAL)<br>REGLAGE VERTICAL MANUEL-GROUPE UNIVERSAL<br>MANUELLE VERTIKALVERSTELLUNG UNIVERSALAG<br>UBICACION VERTICAL (UNIVERSAL) |
| 227-1604-0 | SLITTA VERTICALE PER UNIVERSALE<br>VERTICAL SLIDE FOR UNIVERSAL SPINDLE<br>GLISSIERE VERTICALE (ARBRE UNIVERSEL)<br>VERTIKALSCHLITTEN (UNIVERSALWELLE)<br>TRINEO VERTICAL PARA UNIVERSAL |
| 227-1605-0 | RINVIO ROTAZ. E BLOCCAGGIO UNIVERS.<br>ROTATION TRANS. AND LOCKING(UNIV.HEAD)<br>RENVOI ROTATION-BLOCAGE ARBRE UNIV.<br>DREHUNGSVORGELEGE-BLOCK. UNIVERSALWELLE<br>REENVIO ROTAC. Y BLOQUEO UNIV. |
| 227-1606-0 | ALBERO GRUPPO UNIVERSALE<br>UNIVERSAL SPINDLE<br>ARBRE GROUPE UNIVERSEL<br>UNIVERSALWELLE<br>EJE GRUPO UNIVERSAL |
| 227-1606-X | ELETTROMANDRINO COLOMBO<br>ELECTRIC SPINDLE (COLOMBO)<br>MANDRIN ELECTRIQUE (COLOMBO)<br>ELEKTROFRAESDORN (COLOMBO)<br>ELECTROMANDRIL (COLOMBO) |
| 227-1607-0 | MOTORIZZAZIONE<br>MOTORIZATION<br>MOTORISATION<br>MOTORISIERUNG<br>MOTORIZACION |
| 227-1608-0 | SLITTA ORIZZONTALE PER UNIVERSALE<br>HORIZ. SLIDE FOR UNIVERSAL HEAD UNIT<br>GLISSIERE HORIZONTALE (ARBRE UNIVERSEL)<br>HORIZONTALSCHLITTEN (UNIVERSALWELLE)<br>TRINEO HORIZONTAL PARA UNIVERSAL |
| 227-1609-0 | POSIZIONAMENTO VERTICALE<br>VERTICAL ADJUSTMENT<br>REGLAGE VERTICAL<br>VERTIKALVERSTELLUNG<br>UBICATION VERTICAL |
| 227-1610-0 | PRIMO RINVIO X ROTAZIONE UNIVERSALE<br>1 TRANSMISSION FOR UNIV.SPINDLE ROTATION<br>1 ER RENVOI ROTATION ARBRE UNIVERSEL<br>1 VORGELEGE (UNIVERSALWELLENDREHUNG)<br>PRIMER REENVIO X ROTACION UNIVERSAL |
| 227-1611-0 | CUFFIA D'ASPIRAZIONE<br>SUCTION HOOD<br>HOTTE D'ASPIRATION<br>ABSAUGHAUBE<br>CAMPANA DE ASPIRACION |
| 227-1612-0 | CUFFIA D'ASPIRAZIONE<br>SUCTION HOOD<br>HOTTE D'ASPIRATION<br>ABSAUGHAUBE<br>CAMPANA DE ASPIRACION |
| 227-1613-0 | CUFFIA D'ASPIRAZIONE<br>SUCTION HOOD<br>HOTTE D'ASPIRATION<br>ABSAUGHAUBE<br>CAMPANA DE ASPIRACION |
| 227-1613-X | RECUPERO LISTELLO A DX |
| 227-1620-0 | GR. SLITTA RECUPERO LISTELLO<br>SLIDE (GLAZE BEAD)<br>GLISSIERE (PARE-CLOSE)<br>SCHLITTEN (GLASLEISTE)<br>TRINEO RECUPERACION JUNQUILLO |
| 227-1621-0 | SLITTA ORIZZONTALE RECUPERO LISTELLO<br>HORIZONTAL SLIDE (GLAZE BEAD)<br>GLISSIERE HORIZ. (PARE-CLOSE)<br>HORIZONTALSCHLITTEN (GLASLEISTE)<br>TRINEO HORIZONTAL RECUPERACION JUNQUILLO |
| 227-1622-0 | SLITTA VERTICALE RECUPERO LISTELLO<br>VERTICAL SLIDE (GLAZE BEAD)<br>GLISSIERE VERT. (PARE-CLOSE)<br>VERTIKALSCHLITTEN (GLASLEISTE)<br>TRINEO VERTICAL RECUPERACION JUNQUILLO |
| 227-1623-0 | GRUPPO RECUPERO LISTELLO<br>GLAZE BEAD RECOVERY UNIT<br>GROUPE RECUPERATION PARA-CLOSE<br>AGG. GLASLEISTENRUECKGEWINNEN<br>GRUPO RECUPERACION JUNQUILLO |
| 227-1624-0 | COLTELLI DIVISORI<br>RIVING KNIVES<br>COUTEAUX DIVISEURS<br>SPALTKEIL<br>CUCHILLAS DIVISORIAS |
| 227-1625-0 | PORTAUTENSILE E SUO BLOCCAGGIO<br>TOOLHOLDER AND ITS LOCKING<br>PORTE-OUTIL ET SON BLOCAGE<br>WERKZEUGTRAEGER UND SEINE BLOCKIERUNG<br>PORTA-UTENSILIOS Y SU BLOQUEO |
| 227-1626-0 | DISPOSITIVO PER TAGLI PARALLELI<br>DEVICE FOR RIP CUTTING<br>DISPOSITIF POUR COUPES PARALLELES<br>ZUSAETZLICHER DOPPELRAHMEN |
| 227-1701-0 | CARICATORE CS1<br>CS1 FEEDER<br>CHARGEUR CS1<br>ZUFUEHRUNGSMAGAZIN CS1<br>CARGADOR CS1 |

| Codice/Code | Descr./Beschr./Denom. |
|---|---|
| 227-1801-0 | ESTRATTORE<br>EXTRACTOR<br>EXTRACTEUR<br>AUSZIEHWERKZEUG<br>EXTRACTOR |
| 227-1901-0 | RITORNO PEZZI<br>PIECE RETURN DEVICE<br>DISPOSITIF RETOUR PIECES<br>STUECKRUECKLAUFVORRICHTUNG<br>REGRESO PIEZAS |
| 227-5201-0 | GR.TTL INTEGRATO C/CONTROL.A MICROPROCES |
| 227-5202-0 | ALLESTIMENTO SPECIALE |
| 227-5203-0 | GR. SPIGOLATORE<br>CORNER CHAMFERING UNIT<br>GROUPE DE CHANFREINAGE DERRIERE ARBRE HO<br>FASEAGGREGAT |
| 227-5204-0 | GR. SPIGOLATORE MANUALE<br>CORNER CHAMFERING UNIT<br>GROUPE DE CHANFREINAGE DERRIERE ARBRE HO<br>FASEAGGREGAT |
| 227-5205-0 | BLOCCAGGIO RAPIDO<br>SHAFT CLAMPING UNIT<br>GROUPE SERRAGE ARBRE<br>SPINDELBLOCKIERUNG<br>BLOQUED |
| 227-5206-0 | DOPPIO UNIVERSALE C/E.M. DX - SX |
| 227-5207-0 | ELETTROMANDRINO SX LAME D=300<br>ELECTRIC SPINDLE<br>MANDRIN ELECTRIQUE<br>ELECTROSPINDEL<br>ELECTROMANDRIL |
| 227-5208-0 | ELETTROMANDRINO DX LAME D=300<br>ELECTRIC SPINDLE<br>MANDRIN ELECTRIQUE<br>ELECTROSPINDEL<br>ELECTROMANDRIL |
| 227-5209-0 | SLITTA A CROCE X E.M. DX-SX<br>SLIDE<br>GLISSIERE<br>SCHLITTEN<br>TRINEO |
| 227-5210-0 | SLITTA A CROCE X E.M. SX<br>SLIDE<br>GLISSIERE<br>SCHLITTEN<br>TRINEO |
| 227-5211-0 | SLITTA VERTICALE X E.M. SX<br>VERTICAL SLIDE<br>GLISSIERE VERTICALE<br>VERTIKALSCHLITTEN<br>TRINEO VERTICAL |
| 227-5212-0 | GR.TTL INTEGRATO C/CONTROL.A MICROPROCES |
| 227-5213-0 | GR.TTL INTEGRATO C/CONTROL.A MICROPROCES |
| 227-5230-0 | MANDRINO<br>SPINDLE<br>MANDRIN<br>SPINDEL<br>MANDRIL |
| 227-5233-0 | MANDRINO<br>SPINDLE<br>MANDRIN<br>SPINDEL<br>MANDRIL |
| 227-5234-0 | SUPPORTO PIGNA<br>SUPPORT<br>SUPPORT<br>SUPPORT<br>SOPORTE |

| N | P | C | CODICE | Q.TY | DENOMINAZIONE | DESCRIPTION | DESIGNATION | BEZEICHNUNG | DENOMINACION |
|---|---|---|---|---|---|---|---|---|---|
| | 01.01.1901 -> 01.01.3000 | | | | Note: 3322700000D | | | | |
| | 1 | | 1111111111F | 0.00 | INDICE | POINTER | INDICATEUR | ZEIGER | INDICE |

GRUPPO ALBERO UNIVERSALE

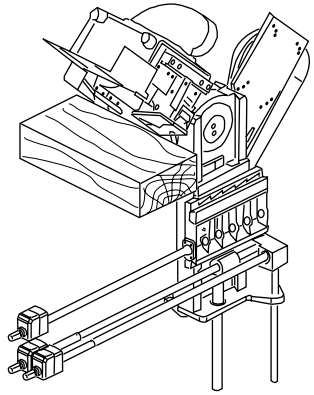

227-16..

GRUPPO ALBERO ORIZZONTALE INFERIORE

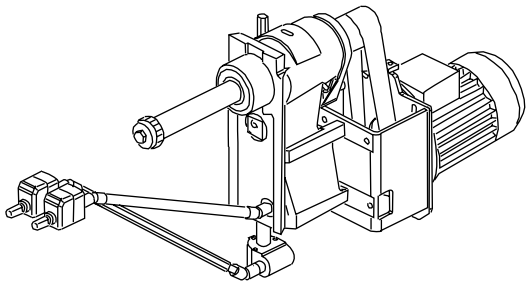

227-15..

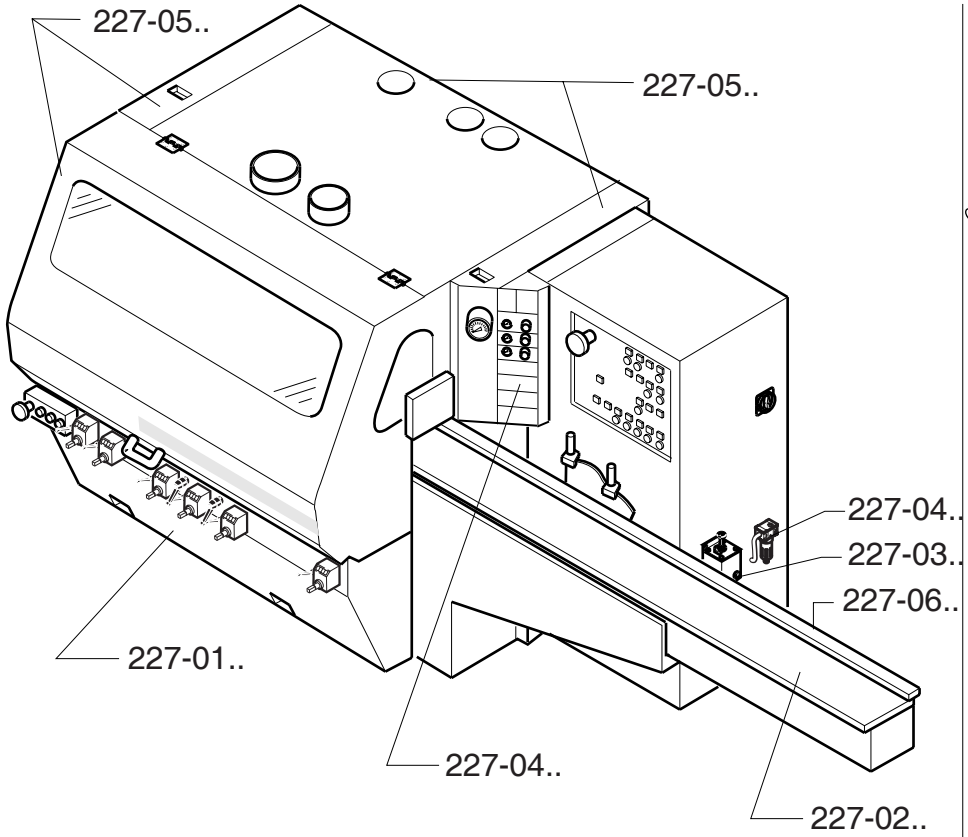


GRUPPO TRAINO E TRAVERSA MOBILE

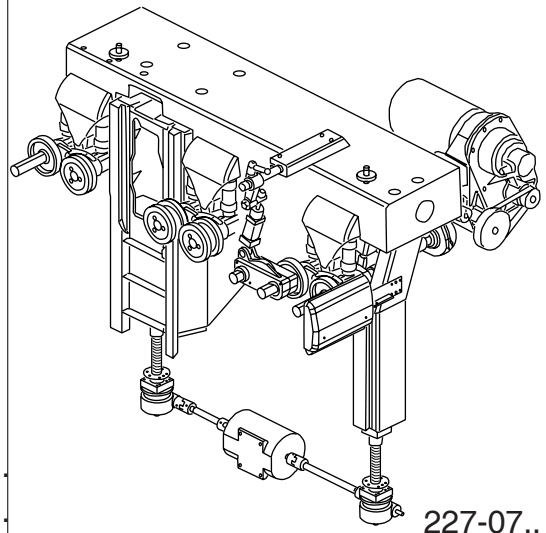

227-07..

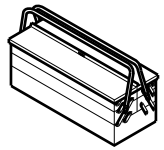

227-08..

GRUPPO ALBERO ORIZZONTALE SUPERIORE

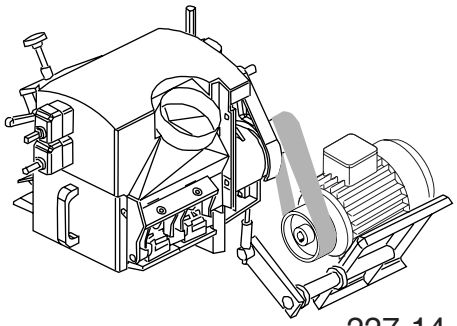

227-14..

GRUPPO ALBERO VERTICALE SINISTRO

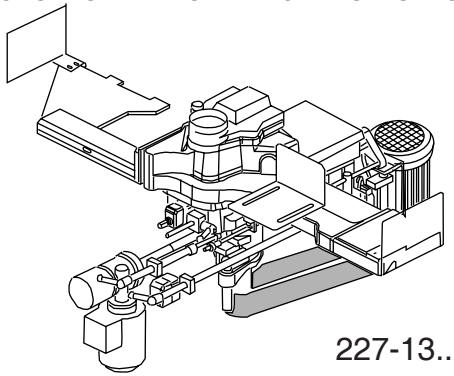

227-13..

GRUPPO ALBERO VERTICALE DESTRO

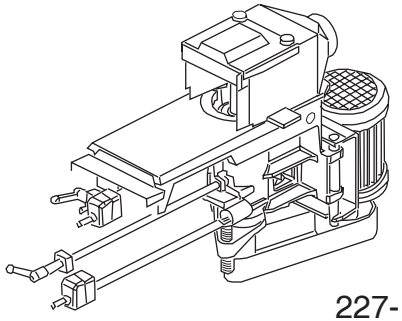

227-12..

GRUPPO ALBERO PIALLA

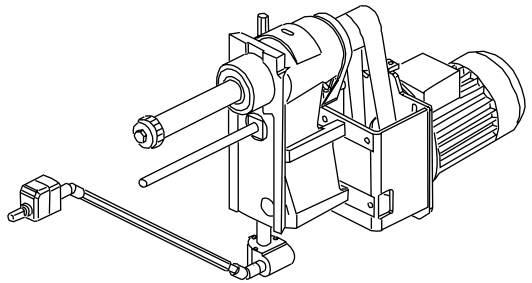

227-11..

| | | | |
|---|---|---|---|
| scm | **SUPERSET XL** | **INDICE FIGURATIVO - (01.01.1901 -> - p.20,06,2007)**<br>**PICTORIAL INDEX - INDEX EXPLICATIF**<br>**BAUGRUPPENVERZEICHNIS - INDICE FIGURATIVO** | **227-0001-0** |

| N | P | C | CODICE | Q.TY | DENOMINAZIONE | DESCRIPTION | DESIGNATION | BEZEICHNUNG | DENOMINACION |
|---|---|---|---|---|---|---|---|---|---|
| | 01.01.1901 -> 01.01.3000 | | | | Note: 2822710210B | | | | |
| | 1 | | 1521420606B | 4.00 | STAFFA | BRACKET | BRIDE | BUEGEL | ABRAZADERA |
| | 2 | | 0322710109E | 1.00 | STAFFA | BRACKET | BRIDE | BUEGEL | ABRAZADERA |
| | 2 | | 0522710125C | 1.00 | STAFFA | BRACKET | BRIDE | BUEGEL | ABRAZADERA |
| | 3 | | 0000301363D | 12.00 | DADO | NUT | ECROU | MUTTER | TUERCA |
| | 4 | | 0322710100E | 3.00 | LARDONE | GIB | CONTRE-FER | STELLEISTE | CHAVETA |
| | 5 | | 0000316523B | 12.00 | PRIGIONIERO | STUD BOLT | VIS PRISONNIERE | STIFTSCHRAUBE | PERNO PRISIONERO |
| | 6 | | 0313122711A | 8.00 | VITE | SCREW | VIS | SCHRAUBE | TORNILLO |
| | 7 | | 0331514001F | 8.00 | APPOGGIO H=170 | SUPPORT | SUPPORT | STUETZE | APOYO |
| | 7 | | 0331514002H | 8.00 | APPOGGIO H=105 | SUPPORT | SUPPORT | STUETZE | APOYO |
| | 7 | | 1510812603F | 8.00 | APPOGGIO H=15 | SUPPORT | SUPPORT | STUETZE | APOYO |
| | 7 | | 1519410087D | 8.00 | APPOGGIO H=90 | SUPPORT | APPUI | STUETZE | APOYO |
| | 8 | | 0522710001L | 1.00 | BASAMENTO | FRAME | BATI | STAENDER | BANCADA |
| | 8 | | 0522710003D | 1.00 | BASAMENTO | FRAME | BATI | STAENDER | BANCADA |
| | 8 | | 0522710021B | 1.00 | BASAMENTO | FRAME | BATI | STAENDER | BANCADA |
| | 8 | | 0522710041D | 1.00 | BASAMENTO | FRAME | BATI | STAENDER | BANCADA |
| | 8 | | 0522710043H | 1.00 | BASAMENTO | FRAME | BATI | STAENDER | BANCADA |
| | 8 | | 0522710051E | 1.00 | BASAMENTO | FRAME | BATI | STAENDER | BANCADA |
| | 8 | | 0522710052G | 1.00 | BASAMENTO | FRAME | BATI | STAENDER | BANCADA |
| | 8 | | 0522710060D | 1.00 | BASAMENTO | FRAME | BATI | STAENDER | BANCADA |
| | 9 | | 0322710104D | 4.00 | COPERCHIO | COVER | COUVERCLE | DECKEL | TAPA |
| | 10 | | 0322710107A | 1.00 | COPERCHIO | COVER | COUVERCLE | DECKEL | TAPA |
| | 10 | | 0322710119F | 1.00 | COPERCHIO | COVER | COUVERCLE | DECKEL | TAPA |
| | 11 | | 0000619669H | 2.00 | MANIGLIA | HANDLE | POIGNEE | HANDGRIFF | MANIJA |
| | 12 | | 0322710114E | 2.00 | GUIDA | GUIDE | GUIDE | FUEHRUNG | GUIA |
| | 13 | | 0322710115G | 2.00 | CHIUSURA | COVER | PIECE DE FERMETURE | DECKEL | CIERRE |
| | 14 | | 0322710106H | 1.00 | COPERCHIO | COVER | COUVERCLE | DECKEL | TAPA |
| | 14 | | 0322710118D | 1.00 | COPERCHIO | COVER | COUVERCLE | DECKEL | TAPA |
| | 15 | | 0522710018F | 2.00 | TURCITE | TURCITE | TURCITE | TURCITE | TURCITE |
| | 16 | | 0001308055A | 1.00 | FINECORSA | MICROSWITCH | FIN DE COURSE | MIKROSCHALTER | FIN CARRERA |
| | 16 | | 0001308332H | 1.00 | FINECORSA | MICROSWITCH | FIN DE COURSE | MIKROSCHALTER | FIN CARRERA |
| | 17 | | 0322371108C | 1.00 | SOFFIATORE | BLOWER | SOUFFLEUR | BLAESER | SOPLADOR |
| | 18 | | 0522710121D | 1.00 | STAFFA | BRACKET | BRIDE | BUEGEL | ABRAZADERA |
| | 19 | | 0321940425B | 1.00 | ASTUCCIO | CASE | ETUI | BEHAELTER | ESTUCHE |
| | 20 | | 0531510020F | 4.00 | STAFFA | BRACKET | BRIDE | BUEGEL | ABRAZADERA |
| | 21 | | 0533510104L | 4.00 | STAFFA | BRACKET | BRIDE | BUEGEL | ABRAZADERA |

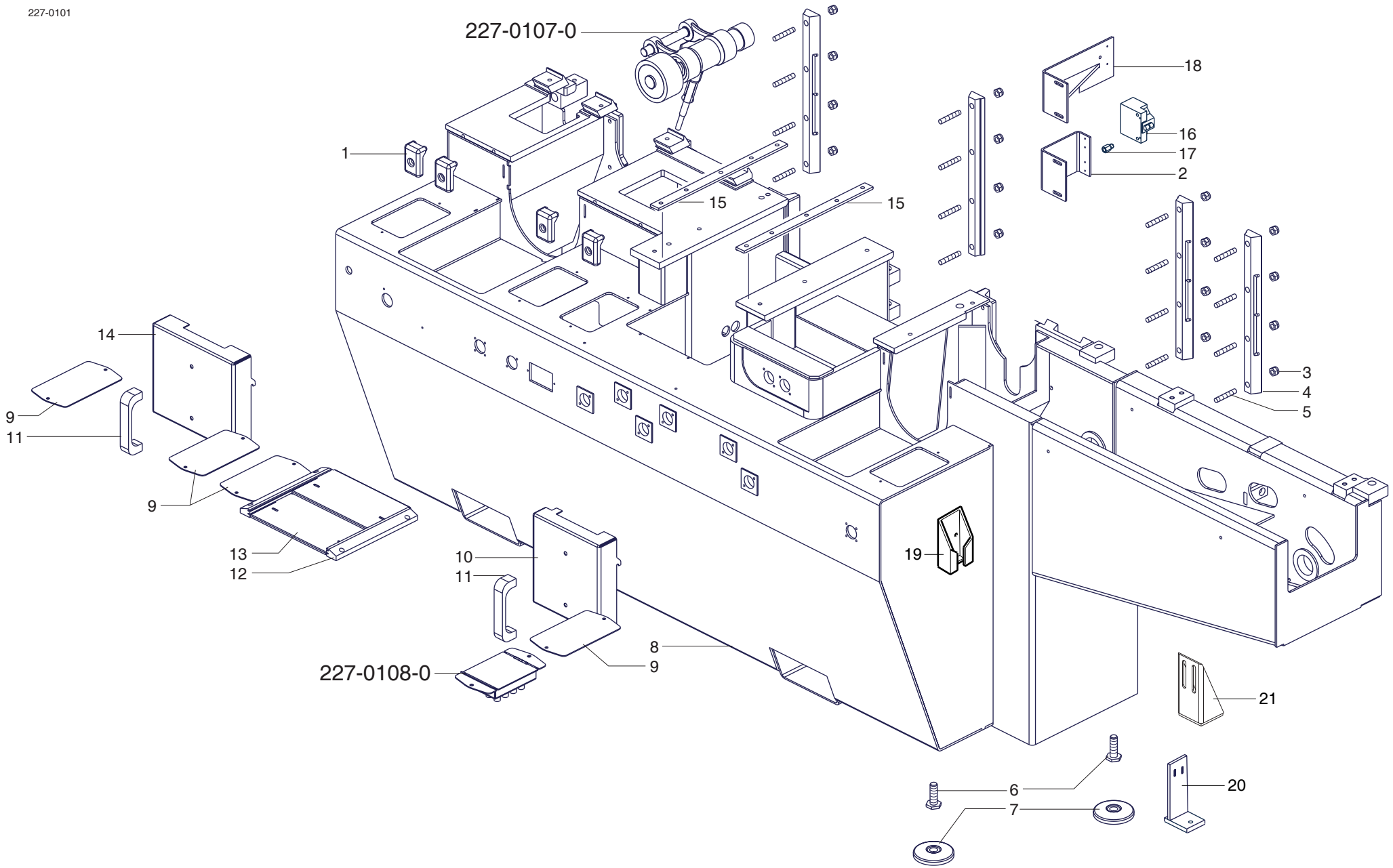


| | | | |
|---|---|---|---|
| scm | SUPERSET XL | BASAMENTO (COMPOSIZIONI 1 E 5) - (01.01.1901 -> - p.20,06,2007)<br>FRAME (1-5 VERSION) - BATI (VERSION 1-5)<br>STAENDER (1-5 VERSION) - BANCADA (COMPOSICION 1 Y 5) | 227-0101-0 |

| scm | SUPERSET XL | BASAMENTO (COMPOSIZIONI 2 E 6) - (p.20,06,2007)<br>FRAME (2-6 VERSION) - BATI (VERSION 2-6)<br>STAENDER (2-6 VERSION) - BANCADA (COMPOSICION 2 Y 6) | 227-0102-0 |
|---|---|---|---|

| N | P | C | CODICE | Q.TY | DENOMINAZIONE | DESCRIPTION | DESIGNATION | BEZEICHNUNG | DENOMINACION |
|---|---|---|---|---|---|---|---|---|---|
| | 01.01.1901 -> 01.01.3000 | | | | Note: 2822710220C | | | | |
| 1 | | | 0322710104D | 1.00 | COPERCHIO | COVER | COUVERCLE | DECKEL | TAPA |
| 2 | | | 0322710106H | 1.00 | COPERCHIO | COVER | COUVERCLE | DECKEL | TAPA |
| 2 | | | 0322710118D | 1.00 | COPERCHIO | COVER | COUVERCLE | DECKEL | TAPA |
| 3 | | | 0000619669H | 2.00 | MANIGLIA | HANDLE | POIGNEE | HANDGRIFF | MANIJA |
| 4 | | | 0322710115G | 2.00 | CHIUSURA | COVER | PIECE DE FERMETURE | DECKEL | CIERRE |
| 5 | | | 0322710114E | 2.00 | GUIDA | GUIDE | GUIDE | FUEHRUNG | GUIA |
| 6 | | | 0322710107A | 1.00 | COPERCHIO | COVER | COUVERCLE | DECKEL | TAPA |
| 6 | | | 0322710119F | 1.00 | COPERCHIO | COVER | COUVERCLE | DECKEL | TAPA |
| 7 | | | 0313122711A | 8.00 | VITE | SCREW | VIS | SCHRAUBE | TORNILLO |
| 8 | | | 0331514002H | 10.00 | APPOGGIO H=105 | SUPPORT | SUPPORT | STUETZE | APOYO |
| 8 | | | 1510812603F | 8.00 | APPOGGIO H=15 | SUPPORT | SUPPORT | STUETZE | APOYO |
| 8 | | | 1519410087D | 10.00 | APPOGGIO H=90 | SUPPORT | APPUI | STUETZE | APOYO |
| 9 | | | 0522710002B | 1.00 | BASAMENTO | FRAME | BATI | STAENDER | BANCADA |
| 9 | | | 0522710022D | 1.00 | BASAMENTO | FRAME | BATI | STAENDER | BANCADA |
| 9 | | | 0522710042F | 1.00 | BASAMENTO | FRAME | BATI | STAENDER | BANCADA |
| 9 | | | 0522710044A | 1.00 | BASAMENTO | FRAME | BATI | STAENDER | BANCADA |
| 9 | | | 0522710061F | 1.00 | BASAMENTO | FRAME | BATI | STAENDER | BANCADA |
| 10 | | | 0000301363D | 12.00 | DADO | NUT | ECROU | MUTTER | TUERCA |
| 11 | | | 0322710100E | 3.00 | LARDONE | GIB | CONTRE-FER | STELLEISTE | CHAVETA |
| 12 | | | 0000316523B | 12.00 | PRIGIONIERO | STUD BOLT | VIS PRISONNIERE | STIFTSCHRAUBE | PERNO PRISIONERO |
| 13 | | | 0322710109E | 1.00 | STAFFA | BRACKET | BRIDE | BUEGEL | ABRAZADERA |
| 13 | | | 0522710125C | 1.00 | STAFFA | BRACKET | BRIDE | BUEGEL | ABRAZADERA |
| 14 | | | 1521420606B | 4.00 | STAFFA | BRACKET | BRIDE | BUEGEL | ABRAZADERA |
| 15 | | | 0322371108C | 1.00 | SOFFIATORE | BLOWER | SOUFFLEUR | BLAESER | SOPLADOR |
| 16 | | | 0001308055A | 1.00 | FINECORSA | MICROSWITCH | FIN DE COURSE | MIKROSCHALTER | FIN CARRERA |
| 17 | | | 0321990046H | 2.00 | PIASTRA | PLATE | PLAQUE | PLATTE | PLACA |
| 18 | | | 0522710018F | 2.00 | TURCITE | TURCITE | TURCITE | TURCITE | TURCITE |
| 19 | | | 0522710121D | 1.00 | STAFFA | BRACKET | BRIDE | BUEGEL | ABRAZADERA |
| 20 | | | 0321940425B | 1.00 | ASTUCCIO | CASE | ETUI | BEHAELTER | ESTUCHE |
| 21 | | | 0531510020F | 4.00 | STAFFA | BRACKET | BRIDE | BUEGEL | ABRAZADERA |

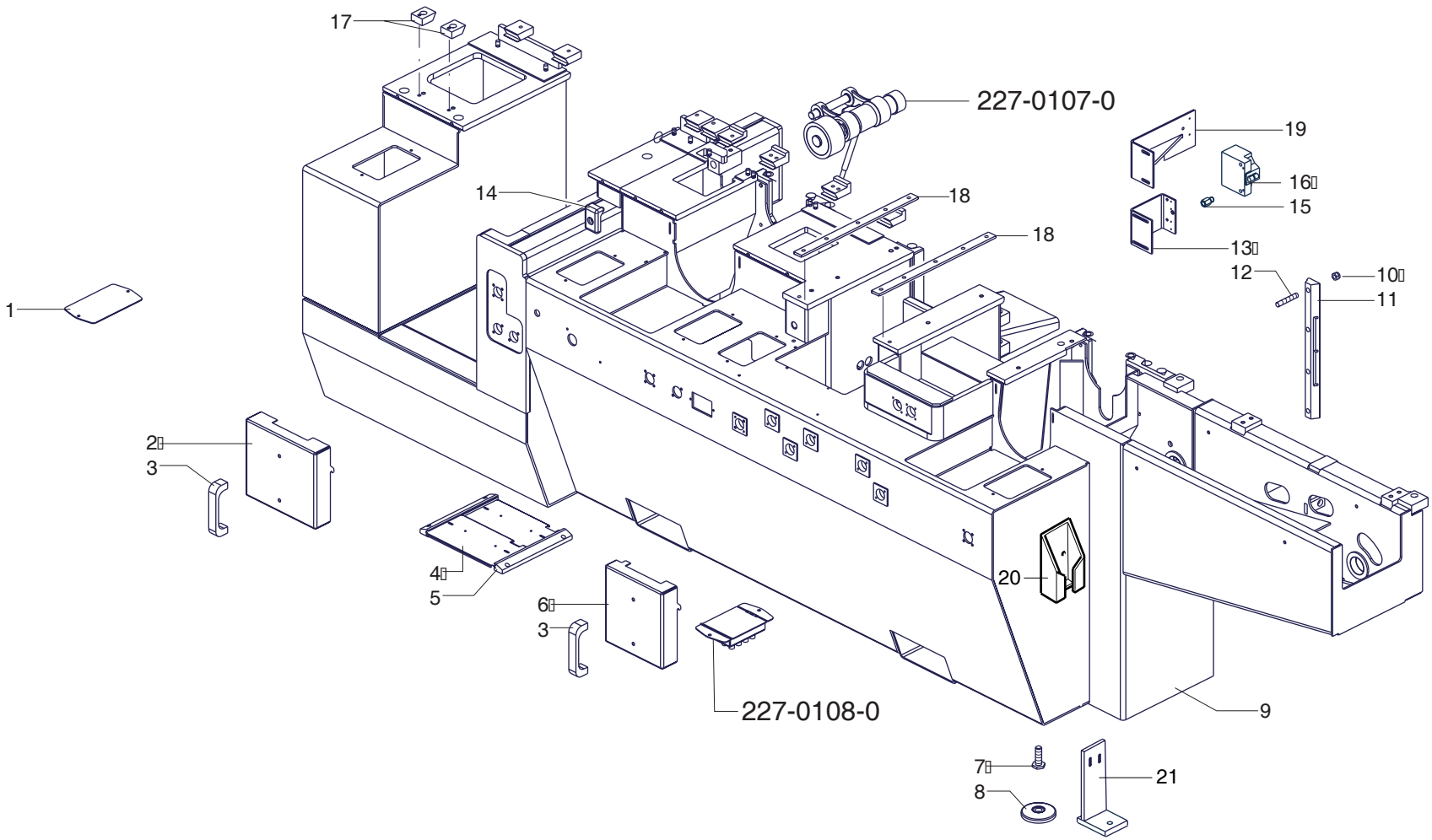


| | | | |
|---|---|---|---|
| scm | SUPERSET XL | BASAMENTO (COMPOSIZIONI 2 E 6) - (01.01.1901 -> - p.20,06,2007)<br>FRAME (2-6 VERSION) - BATI (VERSION 2-6)<br>STAENDER (2-6 VERSION) - BANCADA (COMPOSICION 2 Y 6) | 227-0102-0 |

| scm | SUPERSET XL | MICRO FINECORSA - (p.20,06,2007)<br>LIMIT SWITCH - INTERRUPTEUR FIN DE COURSE<br>ENDSCHALTER - MICRO FIN DE CARRERA | 227-0103-0 |
|---|---|---|---|

| N | P | C | CODICE | Q.TY | DENOMINAZIONE | DESCRIPTION | DESIGNATION | BEZEICHNUNG | DENOMINACION |
|---|---|---|---|---|---|---|---|---|---|
| | 01.01.1901 -> 01.01.3000 | | | | Note: 2822710212F | | | | |
| | 1 | | 0322732002D | 1.00 | SUPPORTO | SUPPORT | SUPPORT | STUETZE | SOPORTE |
| | 2 | | 0001308592L | 1.00 | FINECORSA | LIMIT SWITCH | FIN DE COURSE | ENDSCHALTER | FIN CARRERA |
| | 3 | | 0325210300A | 2.00 | DISTANZIALE | SPACER | ENTRETOISE | DISTANZSTUECK | DISTANCIADOR |

227-0103

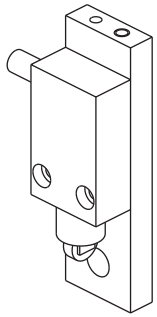

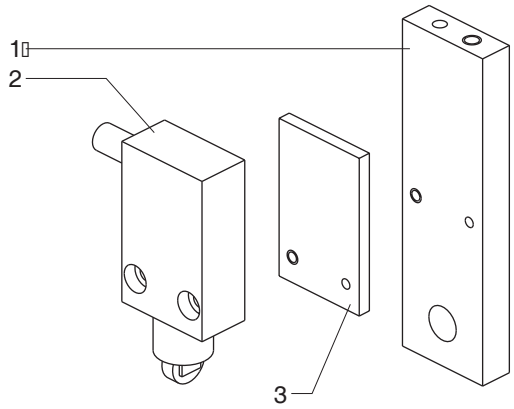

| scm | SUPERSET XL | POSIZIONAMENTO ORIZZ. ASSE CONTINUO V.S. - (p.20,06,2007)<br>CONTINUOUS AXIS HORIZONTAL POSITIONING - POSITIONNEMENT HORIZONTAL AXE CONTINU<br>HORIZONTALVERSTELLUNG MIT KONT. ACHSE - UBICACION HORIZONTAL A EJE CONTINUO | 227-0104-0 |
|---|---|---|---|

| N | P | C | CODICE | Q.TY | DENOMINAZIONE | DESCRIPTION | DESIGNATION | BEZEICHNUNG | DENOMINACION |
|---|---|---|---|---|---|---|---|---|---|
| | 01.01.1901 -> 01.01.3000 | | | | Note: 2822710214A | | | | |
| | 1 | | 0000301303G | 1.00 | DADO | NUT | ECROU | MUTTER | TUERCA |
| | 2 | | 0000305246A | 2.00 | ROSETTA | WASHER | RONDELLE | SCHEIBE | ARANDELA |
| | 3 | | 0000308354C | 1.00 | VITE | SCREW | VIS | SCHRAUBE | TORNILLO |
| | 4 | | 0322732001B | 1.00 | STAFFA | BRACKET | BRIDE | BUEGEL | ABRAZADERA |
| | 5 | | 0001307905D | 1.00 | FINECORSA | LIMIT SWITCH | FIN DE COURSE | ENDSCHALTER | FIN CARRERA |

227-0104

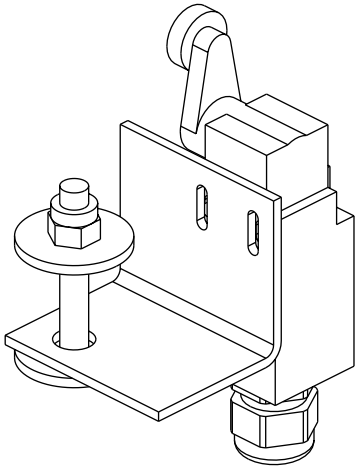

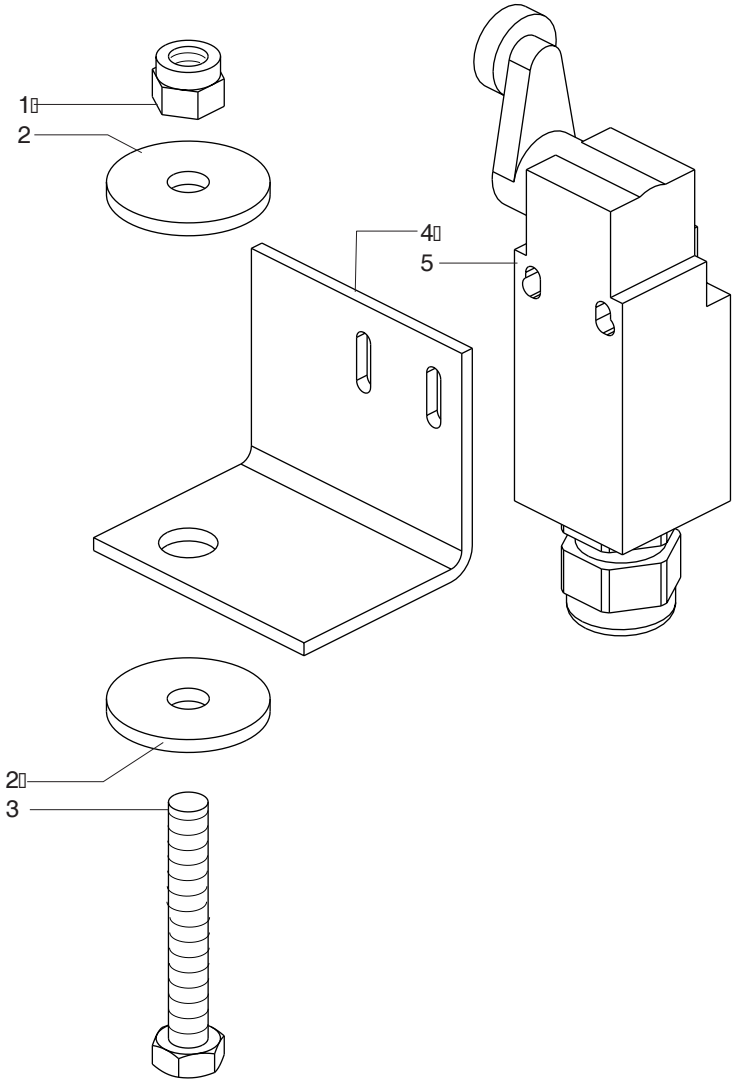


| | | | |
|---|---|---|---|
| scm | SUPERSET XL | POSIZIONAMENTO ORIZZ. ASSE CONTINUO V.S. - (01.01.1901 -> - p.20,06,2007)<br>CONTINUOUS AXIS HORIZONTAL POSITIONING - POSITIONNEMENT HORIZONTAL AXE CONTINU<br>HORIZONTALVERSTELLUNG MIT KONT. ACHSE - UBICACION HORIZONTAL A EJE CONTINUO | 227-0104-0 |

| scm | SUPERSET XL | POSIZIONAMENTO ORIZZ. ASSE CONTINUO V.S. - (p.20,06,2007)<br>CONTINUOUS AXIS HORIZONTAL POSITIONING - POSITIONNEMENT HORIZONTAL AXE CONTINU<br>HORIZONTALVERSTELLUNG MIT KONT. ACHSE - UBICACION HORIZONTAL A EJE CONTINUO | 227-0105-0 |
|---|---|---|---|

| N | P | C | CODICE | Q.TY | DENOMINAZIONE | DESCRIPTION | DESIGNATION | BEZEICHNUNG | DENOMINACION |
|---|---|---|---|---|---|---|---|---|---|
| | 01.01.1901 -> 10.11.2000 | | | | Note: 2822710215C | | | | |
| | 1 | | 0001308592L | 2.00 | FINECORSA | LIMIT SWITCH | FIN DE COURSE | ENDSCHALTER | FIN CARRERA |
| | 2 | | 0000301303G | 1.00 | DADO | NUT | ECROU | MUTTER | TUERCA |
| | 3 | | 0000305243D | 1.00 | ROSETTA | WASHER | RONDELLE | SCHEIBE | ARANDELA |
| | 4 | | 0322732014L | 1.00 | STAFFA | BRACKET | BRIDE | BUEGEL | ABRAZADERA |
| | 5 | | 0000305246A | 1.00 | ROSETTA | WASHER | RONDELLE | SCHEIBE | ARANDELA |
| | 6 | | 0000308354C | 1.00 | VITE | SCREW | VIS | SCHRAUBE | TORNILLO |
| | 7 | | 0000305338F | 2.00 | ROSETTA | WASHER | RONDELLE | SCHEIBE | ARANDELA |
| | 8 | | 0322371108C | 1.00 | SOFFIATORE | BLOWER | SOUFFLEUR | BLAESER | SOPLADOR |

227-0105

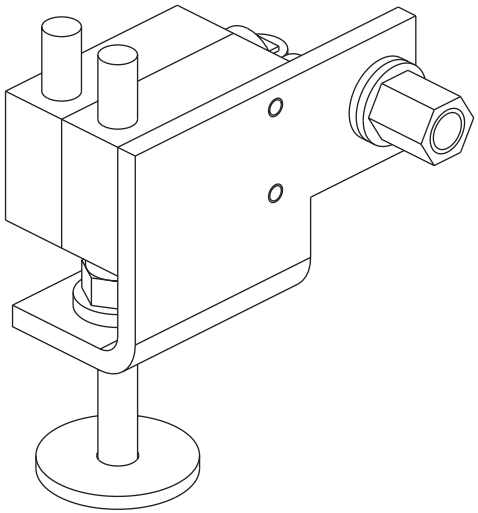

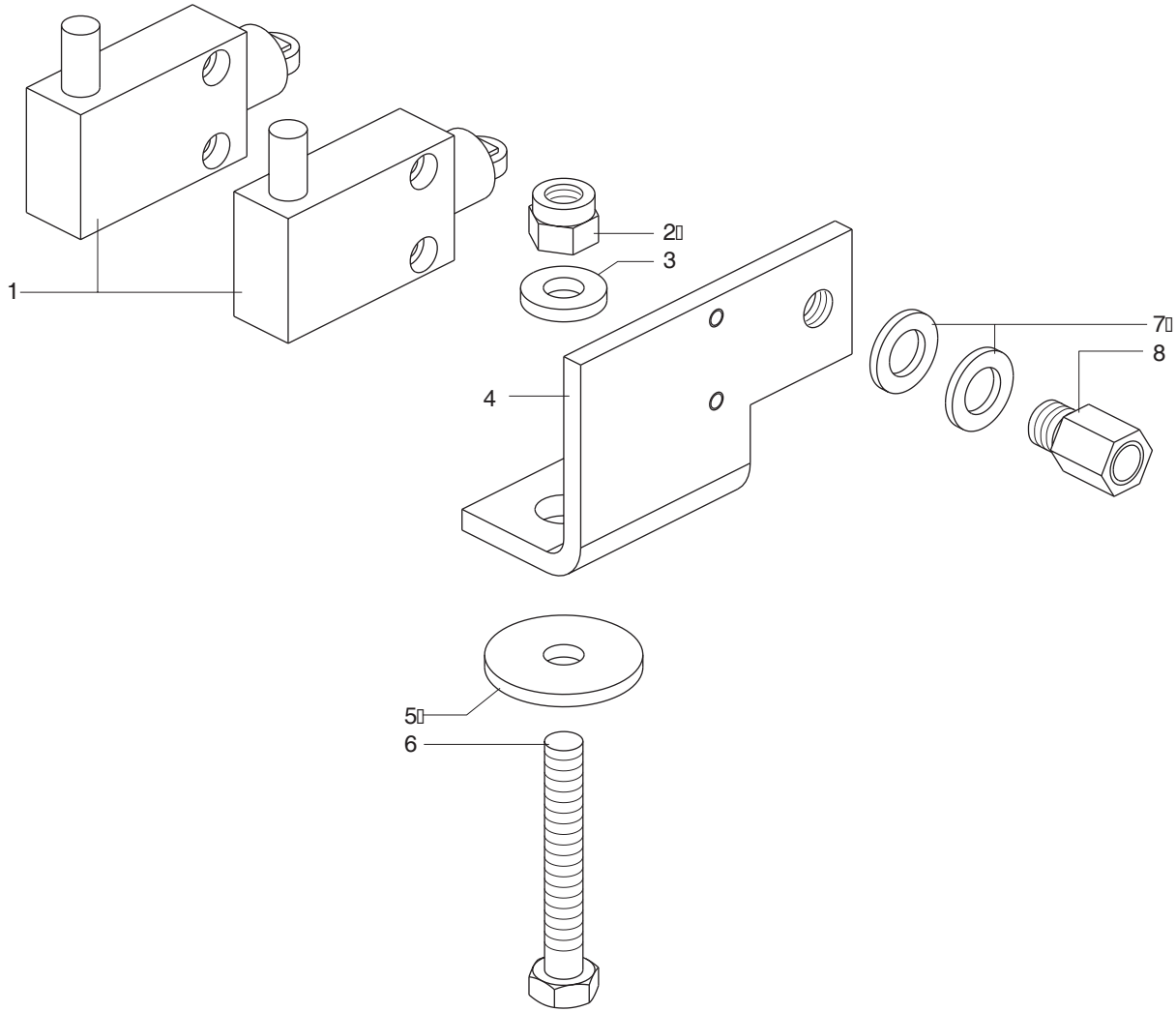


| | | | |
|---|---|---|---|
| scm | SUPERSET XL | POSIZIONAMENTO ORIZZ. ASSE CONTINUO V.S. - (01.01.1901 -> - p.20,06,2007)<br>CONTINUOUS AXIS HORIZONTAL POSITIONING - POSITIONNEMENT HORIZONTAL AXE CONTINU<br>HORIZONTALVERSTELLUNG MIT KONT. ACHSE - UBICACION HORIZONTAL A EJE CONTINUO | 227-0105-0 |

| scm | SUPERSET XL | POSIZIONAMENTO ORIZZ. ASSE CONTINUO (VS) - (p.20,06,2007)<br>CONTINUOUS AXIS HORIZONTAL POSITIONING - POSITIONNEMENT HORIZONTAL AXE CONTINU<br>HORIZONTALVERSTELLUNG MIT KONT. ACHSE - UBICACION HORIZONTAL A EJE CONTINUO | 227-0105-1 |
|---|---|---|---|

| N | P | C | CODICE | Q.TY | DENOMINAZIONE | DESCRIPTION | DESIGNATION | BEZEICHNUNG | DENOMINACION |
|---|---|---|---|---|---|---|---|---|---|
| | 01.01.1901 -> 01.01.3000 | | | | Note: ----- | | | | |
| | 1 | | 0322710271G | 1.00 | SUPPORTO | SUPPORT | SUPPORT | STUETZE | SOPORTE |
| | 2 | | 0319433111G | 1.00 | GUIDA PORTACAMME | CAM HOLDER GUIDE | GUIDE PORTE-CAMES | NOCKENHALTER | GUIA PORTA EXC. |
| | 2 | | 0321930118H | 1.00 | GUIDA PORTACAMME | GUIDE | GUIDE | FUEHRUNG | GUIA |
| | 3 | | 0001347322E | 1.00 | CAMMA TCX-00-24 | CAM | CAME | NOCKEN | EXCENTRICO |
| | 3 | | 0001347324L | 1.00 | CAMMA TCY-63-95 | CAM | CAME | TREIBNOCKEN | EXCENTRICO ACC. |
| | 4 | | 0001347321C | 1.00 | CAMMA TCX-10-34 | CAM | CAME ACTIONNEMENT | TREIBNOCKEN | EXCENT.ACC. |

22701051

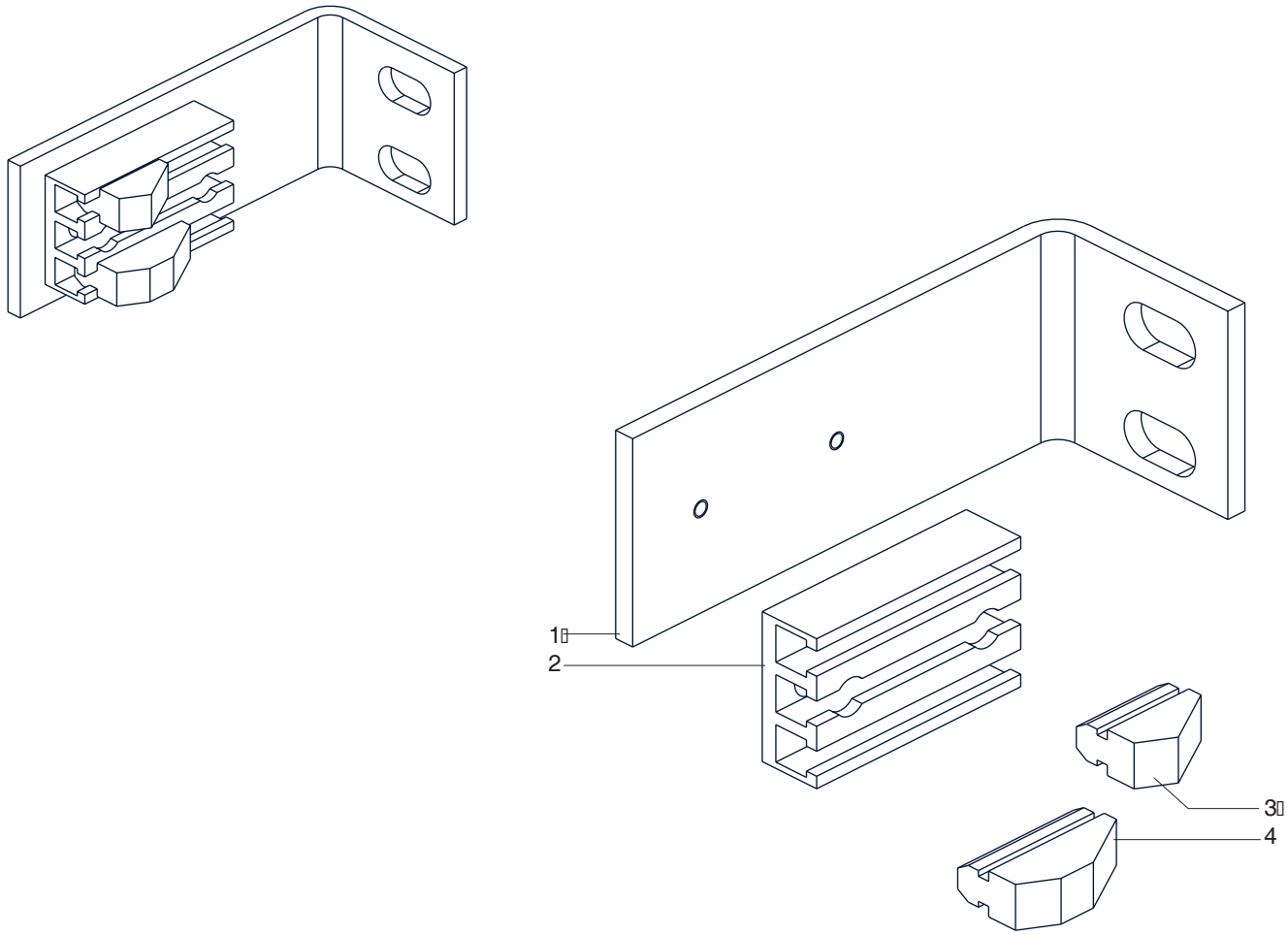

| scm | SUPERSET XL | MICRO FINECORSA - (p.20,06,2007)<br>LIMIT SWITCH - INTERRUPTEUR FIN DE COURSE<br>ENDSCHALTER - MICRO FIN DE CARRERA | 227-0106-0 |
|---|---|---|---|

| N | P | C | CODICE | Q.TY | DENOMINAZIONE | DESCRIPTION | DESIGNATION | BEZEICHNUNG | DENOMINACION |
|---|---|---|---|---|---|---|---|---|---|
| | 01.01.1901 -> 01.01.3000 | | | | Note: 2822710213H | | | | |
| | 1 | | 0322732002D | 1.00 | SUPPORTO | SUPPORT | SUPPORT | STUETZE | SOPORTE |
| | 2 | | 0001308592L | 1.00 | FINECORSA | LIMIT SWITCH | FIN DE COURSE | ENDSCHALTER | FIN CARRERA |
| | 3 | | 0522732036A | 1.00 | SCATOLA | BOX | BOITE | KASTEN | CAJA |
| | 4 | | 9622020312F | 1.00 | VISUALIZZATORE | VIS.QUOTA 110/50/60 | VIS.QUOTA 110/50/60 | VIS.QUOTA 110/50/60 | VIS.QUOTA 110/50/60 |
| | 5 | | 0325210300A | 2.00 | DISTANZIALE | SPACER | ENTRETOISE | DISTANZSTUECK | DISTANCIADOR |

227-0106

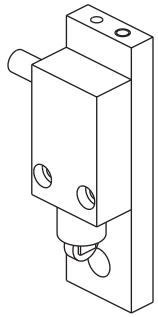

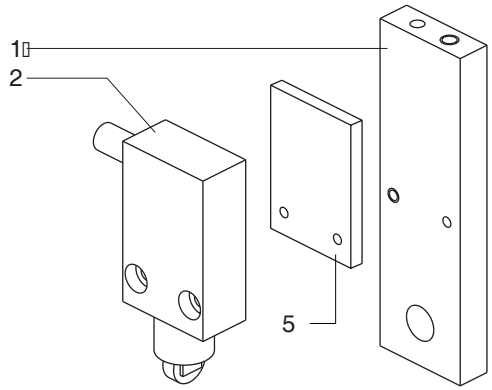


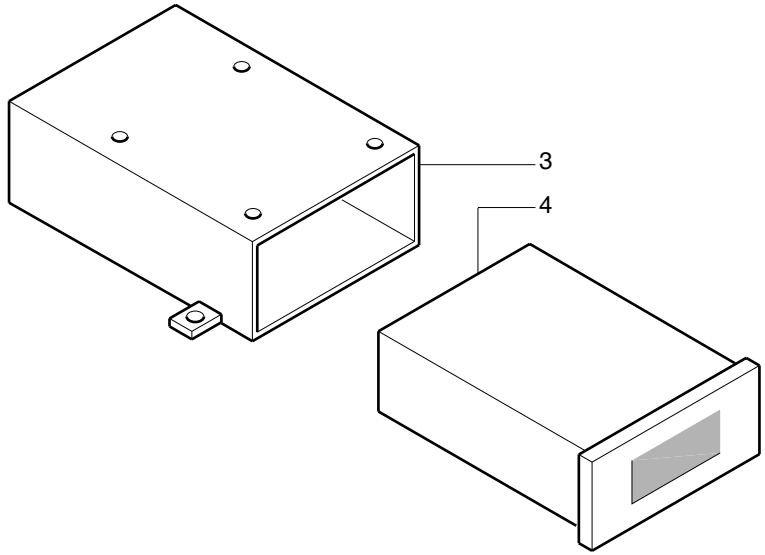


| | | | |
|---|---|---|---|
| scm | SUPERSET XL | MICRO FINECORSA - (01.01.1901 -> - p.20,06,2007)<br>LIMIT SWITCH - INTERRUPTEUR FIN DE COURSE<br>ENDSCHALTER - MICRO FIN DE CARRERA | 227-0106-0 |

| scm | SUPERSET XL | RUOTA TRAINO SUL PIANO - (p.20,06,2007)<br>FEED WHEEL ON THE TABLE - ROUE ENTRAINEMENT SUR LA TABLE<br>DURCHZUGRAD AUF DEM TISCH - RUEDA ARRASTRE EN LA MESA | 227-0107-0 |
|---|---|---|---|

| N | P | C | CODICE | Q.TY | DENOMINAZIONE | DESCRIPTION | DESIGNATION | BEZEICHNUNG | DENOMINACION |
|---|---|---|---|---|---|---|---|---|---|
| | 01.01.1901 -> 01.01.3000 | | | | Note: 2822740080B | | | | |
| | 1 | | 0521940598C | 1.00 | RULLO | ROLLER | ROULEAU | WALZE | RODILLO |
| | 2 | | 0000644278L | 2.00 | ANELLO SEEGER | CIRCLIP | CIRCLIP | SEEGERRING | SEEGER |
| | 3 | | 0000606102L | 2.00 | CUSCINETTO | BEARING | ROULEMENT | LAGER | COJINETE |
| | 4 | | 0000645054E | 1.00 | LINGUETTA | FEATHER KEY | LANGUETTE | FEDERKEIL | LINGUETA |
| | 5 | | 0322740032G | 1.00 | ALBERO | SHAFT | ARBRE | WELLE | EJE |
| | 6 | | 0000601013E | 2.00 | BOCCOLA | BUSHING | DOUILLE | BUCHSE | CASQUILLO |
| | 6 | | 0000601248D | 2.00 | BOCCOLA | BUSHING | DOUILLE | BUCHSE | CASQUILLO |
| | 7 | | 0322740010A | 1.00 | FORCELLA | FORK | FOURCHE | GABEL | HORQUILLA |
| | 8 | | 0322740012E | 1.00 | ALBERO | SHAFT | ARBRE | WELLE | EJE |
| | 9 | | 0000613086D | 1.00 | RALLA | BEARING | CRAPAUDINE | SCHEIBE | RANGUA |
| | 10 | | 0000644268H | 1.00 | ANELLO SEEGER | CIRCLIP | CIRCLIP | SEEGERRING | SEEGER |
| | 11 | | 0739045501F | 1.00 | GIUNTO CARDAN.ALL. | UNIVERSAL JOINT | JOINT CARD. | KARDANGELENK | ART.CARD.PROL. |
| | 12 | | 0327340300C | 1.00 | VITE | SCREW | VIS | SCHRAUBE | TORNILLO |
| | 13 | | 0333140184F | 1.00 | MOLLA | SPRING | RESSORT | FEDER | RESORTE |
| | 14 | | 0321940060F | 1.00 | RULLO | ROLLER | ROULEAU | WALZE | RODILLO |

227-0107

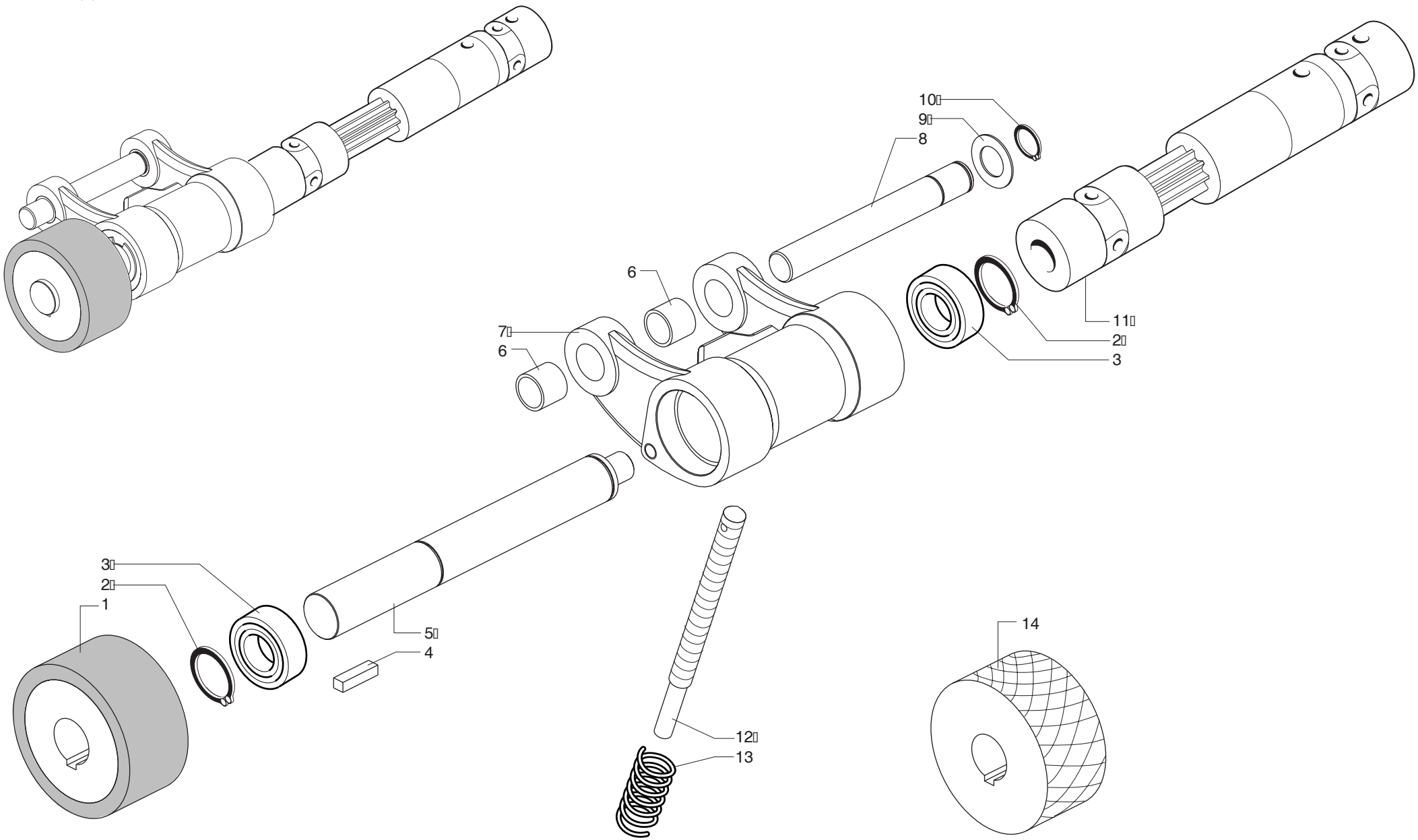


| | | | |
|---|---|---|---|
| scm | SUPERSET XL | RUOTA TRAINO SUL PIANO - (01.01.1901 -> - p.20,06,2007)<br>FEED WHEEL ON THE TABLE - ROUE ENTRAINEMENT SUR LA TABLE<br>DURCHZUGRAD AUF DEM TISCH - RUEDA ARRASTRE EN LA MESA | 227-0107-0 |

| scm | SUPERSET XL | RUOTA TRAINO SUL PIANO - (p.20,06,2007)<br>FEED WHEEL ON THE TABLE - ROUE ENTRAINEMENT SUR LA TABLE<br>DURCHZUGRAD AUF DEM TISCH - RUEDA ARRASTRE EN LA MESA | 227-0107-5 |
|---|---|---|---|

| N | P | C | CODICE | Q.TY | DENOMINAZIONE | DESCRIPTION | DESIGNATION | BEZEICHNUNG | DENOMINACION |
|---|---|---|---|---|---|---|---|---|---|
| | 01.01.1901 -> 01.01.3000 | | | | Note: 2822740080B | | | | |
| | 1 | | 0322740082C | 1.00 | RULLO | ROLLER | ROULEAU | WALZE | RODILLO |
| | 1 | | 0322740083E | 1.00 | RULLO ZIGRINATO | ROLLER | ROULEAU | WALZE | RODILLO |
| | 2 | | 0000644278L | 2.00 | ANELLO SEEGER | CIRCLIP | CIRCLIP | SEEGERRING | SEEGER |
| | 3 | | 0000606102L | 2.00 | CUSCINETTO | BEARING | ROULEMENT | LAGER | COJINETE |
| | 4 | | 0333140184F | 1.00 | MOLLA | SPRING | RESSORT | FEDER | RESORTE |
| | 5 | | 0327340300C | 1.00 | VITE | SCREW | VIS | SCHRAUBE | TORNILLO |
| | 6 | | 0000601013E | 2.00 | BOCCOLA | BUSHING | DOUILLE | BUCHSE | CASQUILLO |
| | 7 | | 0322740010A | 1.00 | FORCELLA | FORK | FOURCHE | GABEL | HORQUILLA |
| | 8 | | 0322740012E | 1.00 | ALBERO | SHAFT | ARBRE | WELLE | EJE |
| | 9 | | 0000613086D | 1.00 | RALLA | BEARING | CRAPAUDINE | SCHEIBE | RANGUA |
| | 10 | | 0000644268H | 1.00 | ANELLO SEEGER | CIRCLIP | CIRCLIP | SEEGERRING | SEEGER |
| | 11 | | 0739045501F | 1.00 | GIUNTO CARDAN.ALL. | UNIVERSAL JOINT | JOINT CARD. | KARDANGELENK | ART.CARD.PROL. |

22701075

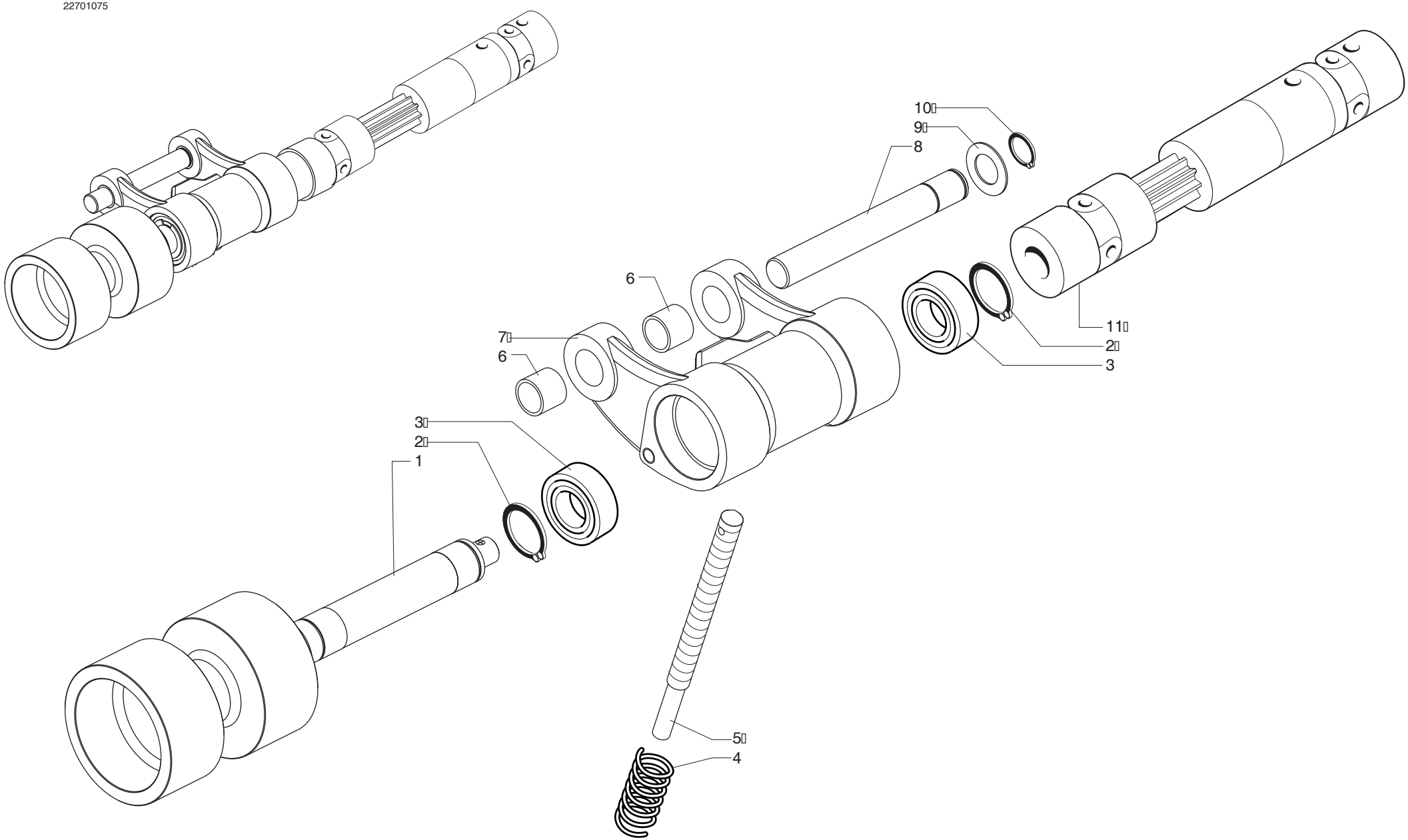


| scm | SUPERSET XL | RUOTA TRAINO SUL PIANO - (01.01.1901 -> - p.20,06,2007)<br>FEED WHEEL ON THE TABLE - ROUE ENTRAINEMENT SUR LA TABLE<br>DURCHZUGRAD AUF DEM TISCH - RUEDA ARRASTRE EN LA MESA | 227-0107-5 |
|---|---|---|---|

| scm | SUPERSET XL | SCATOLA LUBRIFICAZIONE CENTRALIZZATA - (p.20,06,2007)<br>CENTRALIZED LUBRICATION BOX - BOITE LUBRIFICATION CENTRALISEE<br>KASTEN ZUR ZENTRALSCHMIERUNG - CAJA LUBRIFICACION | 227-0108-0 |
|---|---|---|---|

| N | P | C | CODICE | Q.TY | DENOMINAZIONE | DESCRIPTION | DESIGNATION | BEZEICHNUNG | DENOMINACION |
|---|---|---|---|---|---|---|---|---|---|
| | 01.01.1901 -> 01.01.3000 | | | | Note: 2822710211D | | | | |
| | 1 | | 0000616033E | 8.00 | INGRASSATORE (NIPPLO) | GREASE NIPPLE | NIPPLE | SCHMIERNIPPEL | NIPLE ENGRASADOR |
| | 2 | | 0001908005B | 8.00 | RIDUZIONE | REDUCTION | REDUCTION | REDUZIER STUECK | REDUCCION |
| | 3 | | 0522710108G | 1.00 | SCATOLA | BOX | BOITE | KASTEN | CAJA |
| | 4 | | 0001347514C | 8.00 | DADO X PRESSACAVO | NUT | ECROU | MUTTER | TUERCA X TOMACAB. |
| | 5 | | 0001904155E | 8.00 | RACC.RAP. DIR.M | FAST INSERT FITTING (STRA | RACCORD RAP. DROIT M | SCHNELLANSCHLUSS (GERADE | EMP.ATAQ.RAPIDO DER.M |
| | 6 | | 0322775030E | 1.00 | TARGA | RATING PLATE | PLAQUE | SCHILD | TARJETA |

227-0108

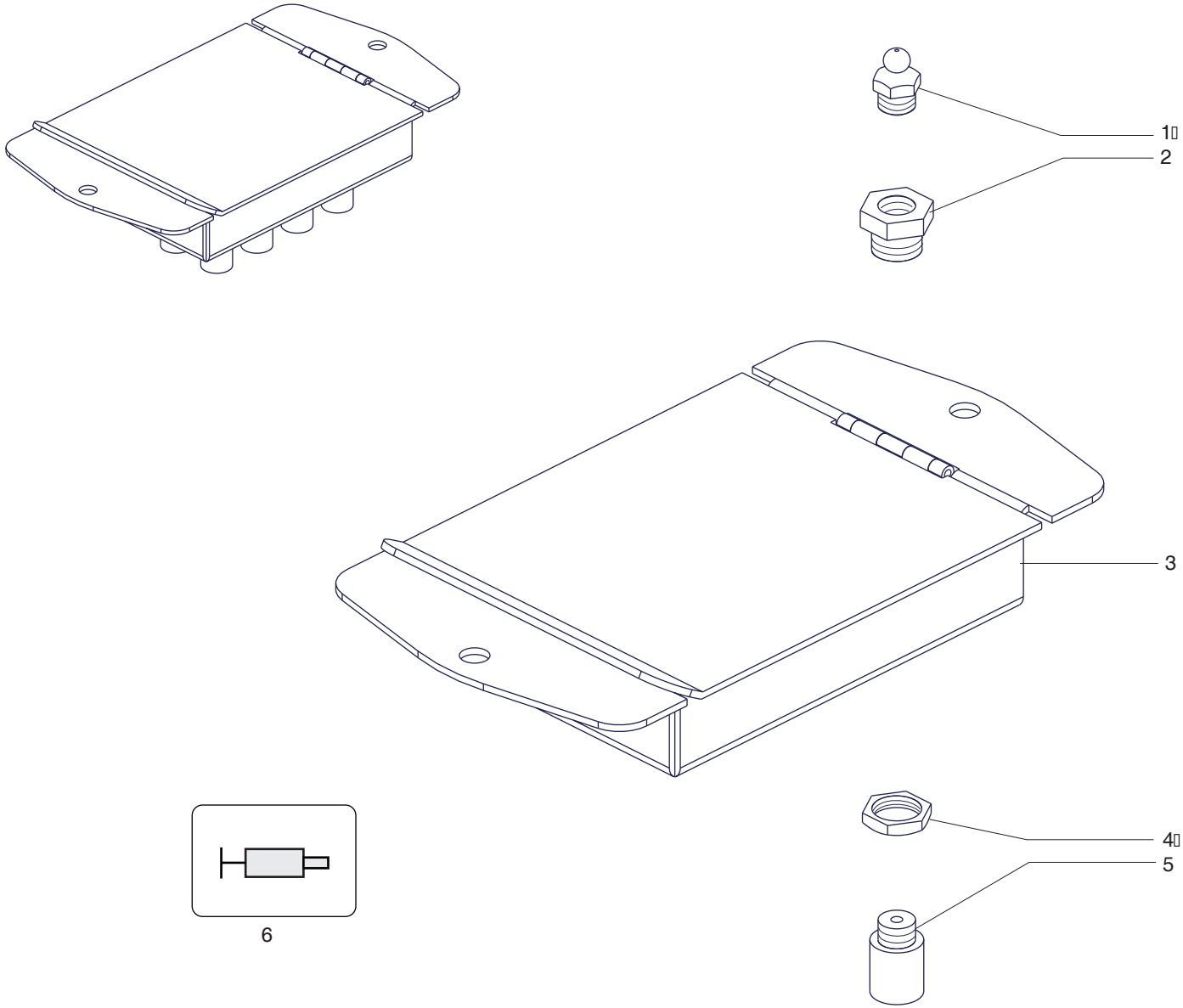


| | | | |
|---|---|---|---|
| scm | SUPERSET XL | SCATOLA LUBRIFICAZIONE CENTRALIZZATA - (01.01.1901 -> - p.20,06,2007)<br>CENTRALIZED LUBRICATION BOX - BOITE LUBRIFICATION CENTRALISEE<br>KASTEN ZUR ZENTRALSCHMIERUNG - CAJA LUBRIFICACION | 227-0108-0 |

| scm | SUPERSET XL | RULLO MOTORIZZATO SUL BASAMENTO - (p.20,06,2007)<br>MOTORIZED ROLLER - ROULEAU MOTORISE<br>MOTORBETRIEBENE ROLLE - RODILLO MOTORIZADO | 227-0109-0 |
|---|---|---|---|

| N | P | C | CODICE | Q.TY | DENOMINAZIONE | DESCRIPTION | DESIGNATION | BEZEICHNUNG | DENOMINACION |
|---|---|---|---|---|---|---|---|---|---|
| | 01.01.1901 -> 01.01.3000 | | | | Note: ----- | | | | |
| | 1 | | 0000644278L | 2.00 | ANELLO SEEGER | CIRCLIP | CIRCLIP | SEEGERRING | SEEGER |
| | 2 | | 0000644056H | 4.00 | ANELLO SEEGER | CIRCLIP | CIRCLIP | SEEGERRING | SEEGER |
| | 3 | | 0000606102L | 2.00 | CUSCINETTO | BEARING | ROULEMENT | LAGER | COJINETE |
| | 4 | | 0000301537D | 1.00 | DADO | NUT | ECROU | MUTTER | TUERCA |
| | 5 | | 0321940621G | 1.00 | PIASTRA | PLATE | PLAQUE | PLATTE | PLANCHA |
| | 6 | | 0321940618B | 1.00 | ALBERO | SHAFT | ARBRE | WELLE | EJE |
| | 7 | | 0321940622L | 1.00 | RULLO | ROLLER | ROULEAU | WALZE | RODILLO |
| | 8 | | 0311110301B | 2.00 | SUPPORTO | SUPPORT | SUPPORT | STUETZE | SOPORTE |
| | 8 | | 0311110305A | 2.00 | SUPPORTO | SUPPORT | SUPPORT | STUETZE | SOPORTE |
| | 9 | | 0739045501F | 1.00 | GIUNTO CARDAN.ALL. | UNIVERSAL JOINT | JOINT CARD. | KARDANGELENK | ART.CARD.PROL. |
| | 10 | | 0336210009G | 2.00 | MOLLA | SPRING | RESSORT | FEDER | RESORTE |
| | 11 | | 0321940624D | 1.00 | LAMIERINO | PLATE | TOLE | BLECH | CHAPA |
| | 12 | | 0311110307E | 1.00 | RULLO | ROLLER | ROULEAU | WALZE | RODILLO |
| | 12 | | 0322740084G | 1.00 | RULLO ZIGRINATO | ROLLER | ROULEAU | WALZE | RODILLO |

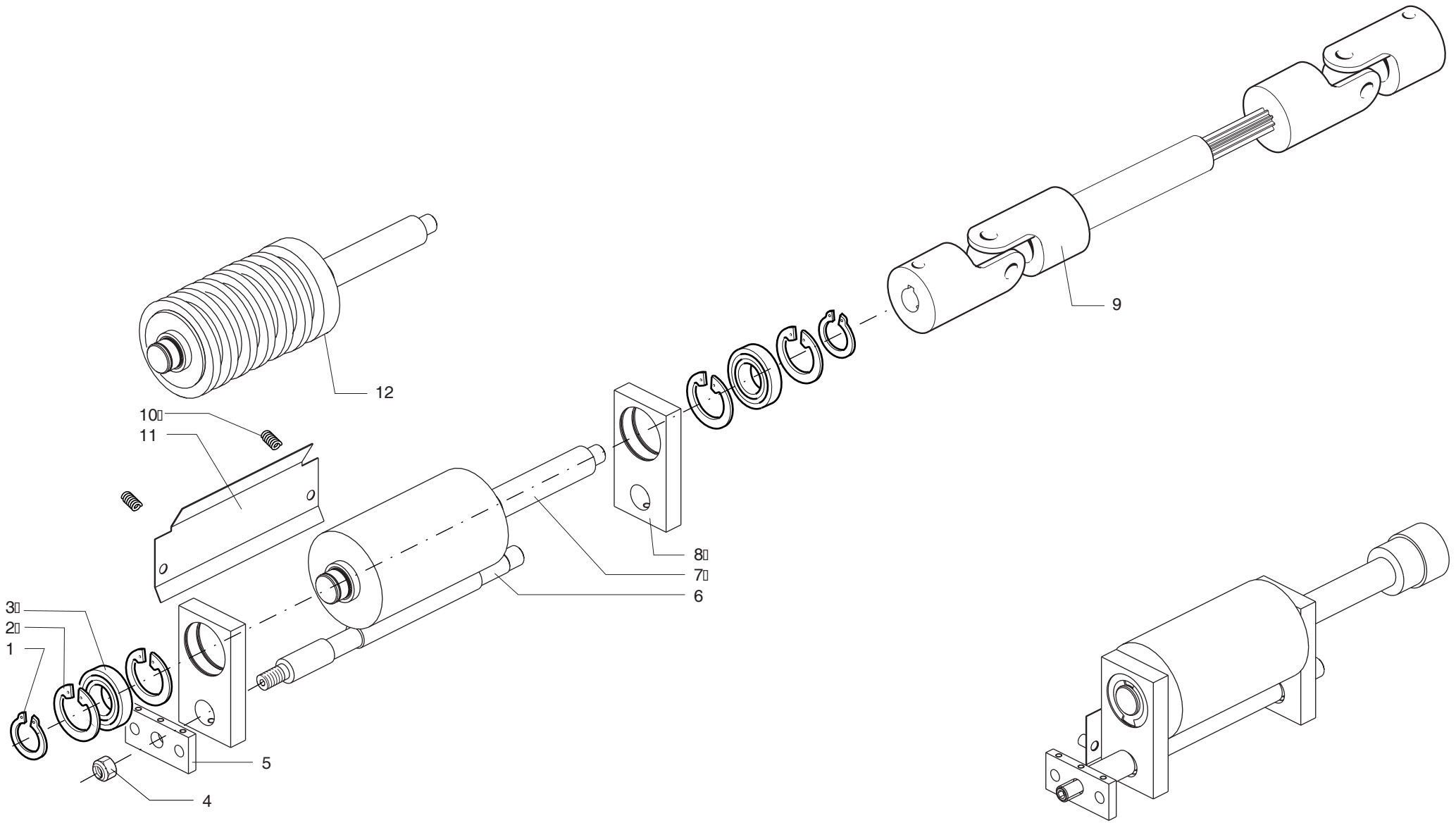


| | | | |
|---|---|---|---|
| scm | **SUPERSET XL** | **RULLO MOTORIZZATO SUL BASAMENTO - (01.01.1901 ->  - p.20,06,2007)**<br>**MOTORIZED ROLLER - ROULEAU MOTORISE**<br>**MOTORBETRIEBENE ROLLE - RODILLO MOTORIZADO** | **227-0109-0** |

| N | P | C | CODICE | Q.TY | DENOMINAZIONE | DESCRIPTION | DESIGNATION | BEZEICHNUNG | DENOMINACION |
|---|---|---|---|---|---|---|---|---|---|
| | 01.01.1901 -> 01.01.3000 | | | | Note: 2822720001A | | | | |
| | 1 | | 0322720113E | 1.00 | PIANO | TABLE | TABLE | TISCH | MESA |
| | 2 | | 0322720112C | 1.00 | PIANO | TABLE | TABLE | TISCH | MESA |
| | 2 | | 0322720192B | 1.00 | PIANO IN REXILON | TABLE | TABLE | TISCH | MESA |
| | 3 | | 0322710113C | 1.00 | SPESSORE | SHIM | CALE | BEILAGE | ESPESOR |
| | 4 | | 0322720111A | 1.00 | PIANO | TABLE | TABLE | TISCH | MESA |
| | 5 | | 0001905059C | 3.00 | RACCORDO RAPIDO "L" M | FAST INSERT FITTING (L-SH | RACCORD RAP. "L" M | SCHNELLANSCHLUSS L -STECK | EMP.ATAQ.RAPIDO A 'L' MAC |
| | 6 | | 0000616033E | 3.00 | INGRASSATORE (NIPPLO) | GREASE NIPPLE | NIPPLE | SCHMIERNIPPEL | NIPLE ENGRASADOR |
| | 7 | | 0322720125A | 1.00 | PIANO | TABLE | TABLE | TISCH | MESA |
| | 8 | | 0322720122D | 1.00 | LARDONE | GIB | CONTRE-FER | STELLEISTE | CHAVETA |
| | 9 | | 0001904155E | 1.00 | RACC.RAP. DIR.M | FAST INSERT FITTING (STRA | RACCORD RAP. DROIT M | SCHNELLANSCHLUSS (GERADE | EMP.ATAQ.RAPIDO DER.M |
| | 10 | | 0322720101L | 1.00 | PIANO | TABLE | TABLE | TISCH | MESA |

227-0201

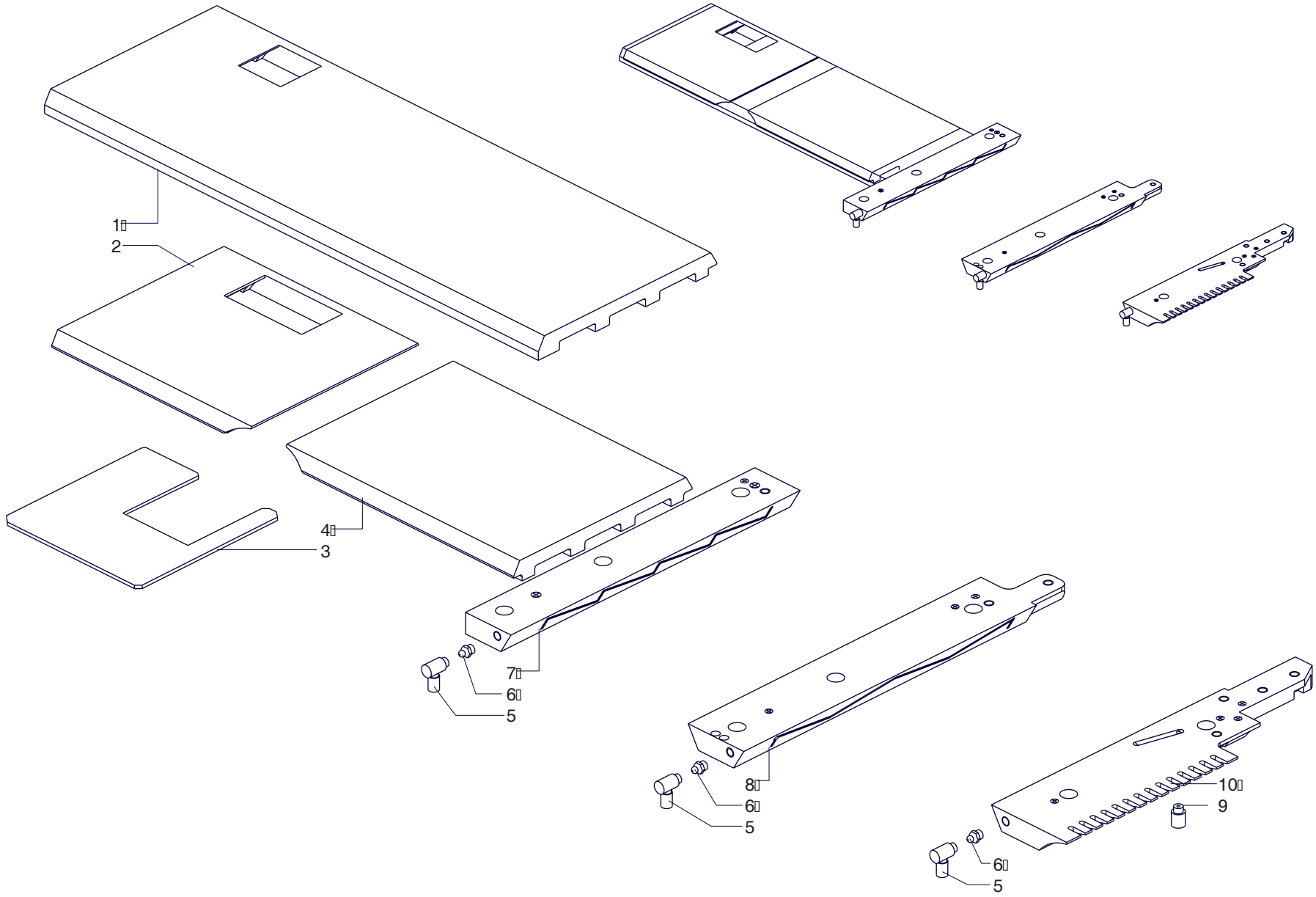


| | | | |
|---|---|---|---|
| scm | SUPERSET XL | PIANI FISSI - (01.01.1901 -> - p.20,06,2007)<br>FIXED TABLES - TABLES FIXES<br>FESTTISCHE - MESAS FIXES | 227-0201-0 |

| N | P | C | CODICE | Q.TY | DENOMINAZIONE | DESCRIPTION | DESIGNATION | BEZEICHNUNG | DENOMINACION |
|---|---|---|---|---|---|---|---|---|---|
| | 01.01.1901 -> 01.01.3000 | | | | Note: 2822720001A | | | | |
| | 1 | | 0311120116B | 1.00 | PIANO | TABLE | TABLE | TISCH | MESA |
| | 1 | | 0311120217F | 1.00 | PIANO CROMATO | TABLE | TABLE | TISCH | MESA |
| | 2 | | 0322720118F | 1.00 | PIANO | TABLE | TABLE | TISCH | MESA |
| | 2 | | 0322720423C | 1.00 | PIANO | TABLE | TABLE | TISCH | MESA |
| | 3 | | 0322710123D | 1.00 | SPESSORE | SHIM | CALE | BEILAGE | ESPESOR |
| | 4 | | 0322720111A | 1.00 | PIANO | TABLE | TABLE | TISCH | MESA |
| | 4 | | 0322720411G | 1.00 | PIANO CROMATO | TABLE | TABLE | TISCH | MESA |
| | 5 | | 0001905059C | 3.00 | RACCORDO RAPIDO "L" M | FAST INSERT FITTING (L-SH | RACCORD RAP. "L" M | SCHNELLANSCHLUSS L -STECK | EMP.ATAQ.RAPIDO A 'L' MAC |
| | 6 | | 0000616033E | 3.00 | INGRASSATORE (NIPPLO) | GREASE NIPPLE | NIPPLE | SCHMIERNIPPEL | NIPLE ENGRASADOR |
| | 7 | | 0322720125A | 1.00 | PIANO | TABLE | TABLE | TISCH | MESA |
| | 7 | | 0322720425G | 1.00 | PIANO | TABLE | TABLE | TISCH | MESA |
| | 8 | | 0322720122D | 1.00 | LARDONE | GIB | CONTRE-FER | STELLEISTE | CHAVETA |
| | 8 | | 0322720422A | 1.00 | LARDONE CROMATO | GIB | CONTRE-FER | STELLEISTE | CHAVETA |
| | 9 | | 0001904155E | 1.00 | RACC.RAP. DIR.M | FAST INSERT FITTING (STRA | RACCORD RAP. DROIT M | SCHNELLANSCHLUSS (GERADE | EMP.ATAQ.RAPIDO DER.M |
| | 10 | | 0322720101L | 1.00 | PIANO | TABLE | TABLE | TISCH | MESA |
| | 10 | | 0322720401F | 1.00 | PIANO | TABLE | TABLE | TISCH | MESA |
| | 11 | | 0322720126C | 1.00 | PIANO | TABLE | TABLE | TISCH | MESA |
| | 11 | | 0322720424E | 1.00 | PIANO | TABLE | TABLE | TISCH | MESA |

22702011

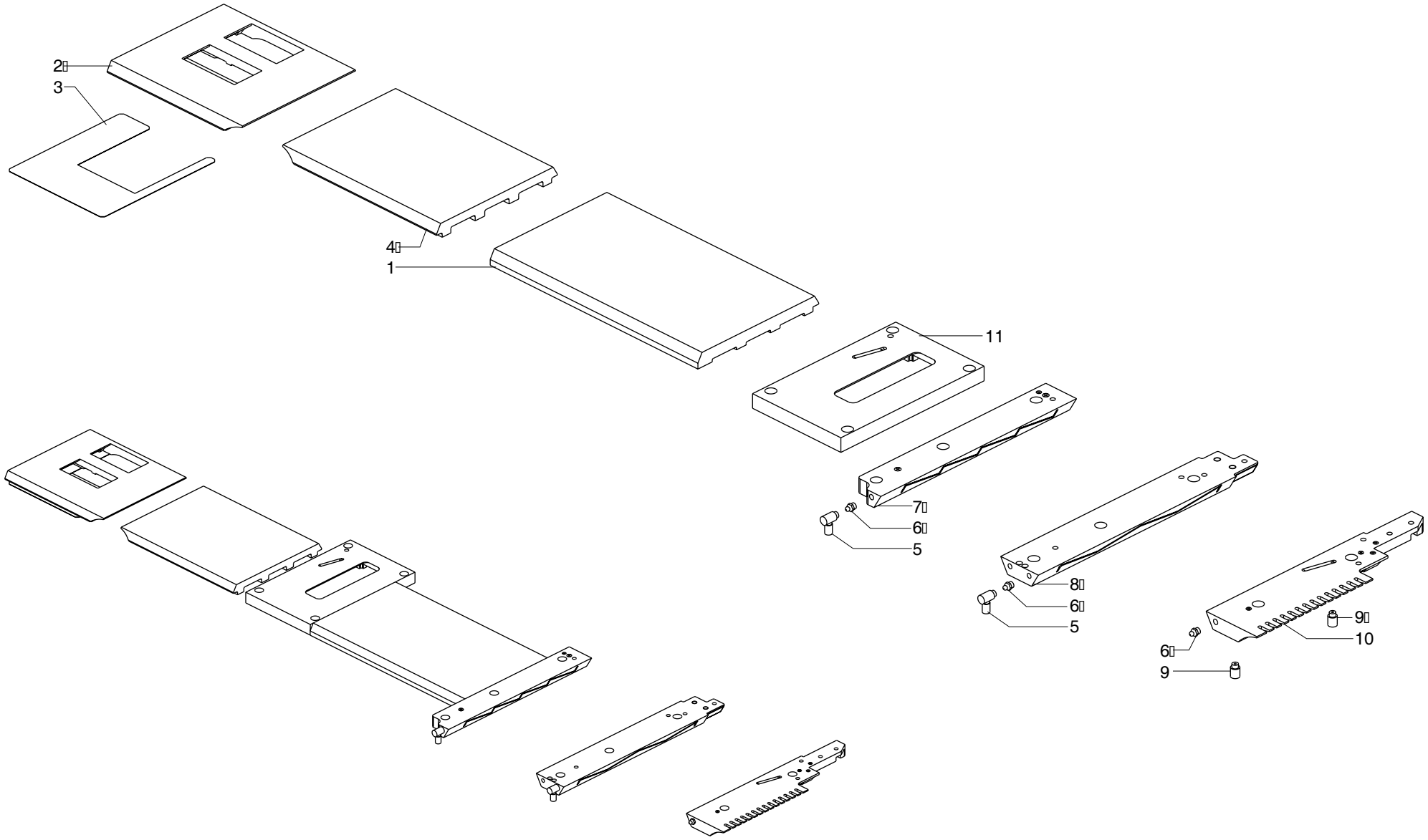


| scm | SUPERSET XL | PIANI FISSI - (01.01.1901 -> - p.20,06,2007)<br>FIXED TABLES - TABLES FIXES<br>FESTTISCHE - MESAS FIXES | 227-0201-1 |
|---|---|---|---|

| N | P | C | CODICE | Q.TY | DENOMINAZIONE | DESCRIPTION | DESIGNATION | BEZEICHNUNG | DENOMINACION |
|---|---|---|---|---|---|---|---|---|---|
| | 01.01.1901 -> 01.01.3000 | | | | Note: ----- | | | | |
| 1 | | | 0322720113E | 1.00 | PIANO | TABLE | TABLE | TISCH | MESA |
| 2 | | | 0322720112C | 1.00 | PIANO | TABLE | TABLE | TISCH | MESA |
| 2 | | | 0322720192B | 1.00 | PIANO IN REXILON | TABLE | TABLE | TISCH | MESA |
| 3 | | | 0322710113C | 1.00 | SPESSORE | SHIM | CALE | BEILAGE | ESPESOR |
| 4 | | | 0322720111A | 1.00 | PIANO | TABLE | TABLE | TISCH | MESA |
| 5 | | | 0001905059C | 3.00 | RACCORDO RAPIDO "L" M | FAST INSERT FITTING (L-SH | RACCORD RAP. "L" M | SCHNELLANSCHLUSS L -STECK | EMP.ATAQ.RAPIDO A 'L' MAC |
| 6 | | | 0000616033E | 3.00 | INGRASSATORE (NIPPLO) | GREASE NIPPLE | NIPPLE | SCHMIERNIPPEL | NIPLE ENGRASADOR |
| 7 | | | 0322720703G | 1.00 | PIANO | TABLE | TABLE | TISCH | MESA |
| 8 | | | 0322720702E | 1.00 | PIANO | TABLE | TABLE | TISCH | MESA |
| 9 | | | 0001904155E | 1.00 | RACC.RAP. DIR.M | FAST INSERT FITTING (STRA | RACCORD RAP. DROIT M | SCHNELLANSCHLUSS (GERADE | EMP.ATAQ.RAPIDO DER.M |
| 10 | | | 0322720701C | 1.00 | PIANO | TABLE | TABLE | TISCH | MESA |

22702015

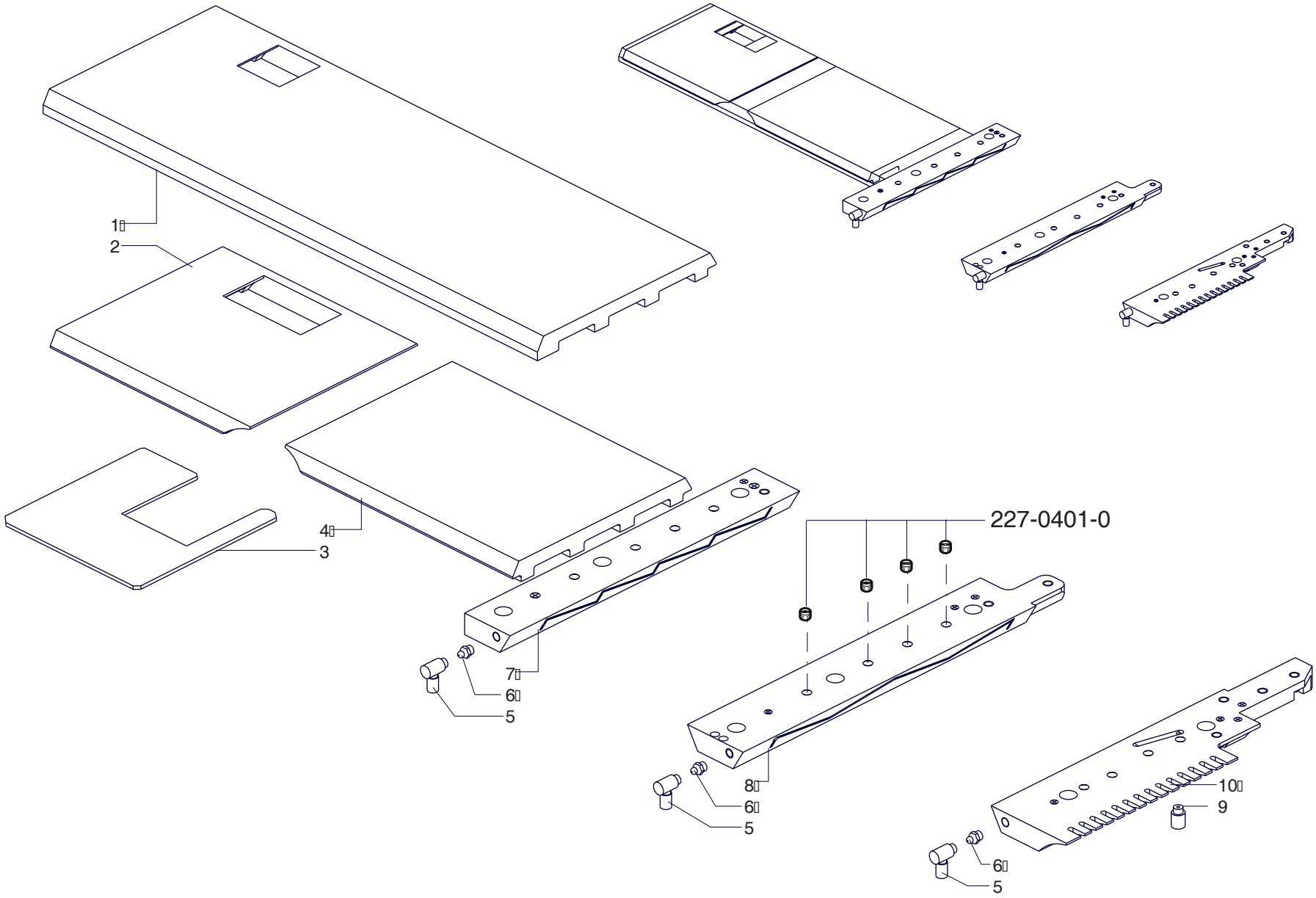


| | | | |
|---|---|---|---|
| scm | SUPERSET XL | PIANI FISSI (SOFFIO ARIA) - (01.01.1901 -> - p.20,06,2007)<br>FIXED TABLES - TABLES FIXES<br>FESTTISCHE - MESAS FIXES | 227-0201-5 |

| scm | SUPERSET XL | PIANI FISSI CROMATI - (p.20,06,2007)<br>CHROMIUM PLATED FIXED TABLES - TABLES FIXES CHROMEES<br>VERCHROMTE FESTTISCHE - MESAS FIJAS CROMADAS | 227-0202-0 |
|---|---|---|---|

| N | P | C | CODICE | Q.TY | DENOMINAZIONE | DESCRIPTION | DESIGNATION | BEZEICHNUNG | DENOMINACION |
|---|---|---|---|---|---|---|---|---|---|
| | 01.01.1901 -> 01.01.3000 | | | | Note: 2822720002C | | | | |
| 1 | | | 0322720413B | 1.00 | PIANO | TABLE | TABLE | TISCH | MESA |
| 2 | | | 0322720404C | 1.00 | PIANO CROMATO CHIUSO | TABLE | TABLE | TISCH | MESA |
| 2 | | | 0322720412L | 1.00 | PIANO | TABLE | TABLE | TISCH | MESA |
| 3 | | | 0322710113C | 1.00 | SPESSORE | SHIM | CALE | BEILAGE | ESPESOR |
| 4 | | | 0322720405E | 1.00 | PIANO CROMATO | TABLE | TABLE | TISCH | MESA |
| 4 | | | 0322720411G | 1.00 | PIANO CROMATO | TABLE | TABLE | TISCH | MESA |
| 5 | | | 0001905059C | 3.00 | RACCORDO RAPIDO "L" M | FAST INSERT FITTING (L-SH | RACCORD RAP. "L" M | SCHNELLANSCHLUSS L -STECK | EMP.ATAQ.RAPIDO A 'L' MAC |
| 6 | | | 0000616033E | 3.00 | INGRASSATORE (NIPPLO) | GREASE NIPPLE | NIPPLE | SCHMIERNIPPEL | NIPLE ENGRASADOR |
| 7 | | | 0322720425G | 1.00 | PIANO | TABLE | TABLE | TISCH | MESA |
| 8 | | | 0322720422A | 1.00 | LARDONE CROMATO | GIB | CONTRE-FER | STELLEISTE | CHAVETA |
| 9 | | | 0001904155E | 1.00 | RACC.RAP. DIR.M | FAST INSERT FITTING (STRA | RACCORD RAP. DROIT M | SCHNELLANSCHLUSS (GERADE | EMP.ATAQ.RAPIDO DER.M |
| 10 | | | 0322720401F | 1.00 | PIANO | TABLE | TABLE | TISCH | MESA |

227-0201

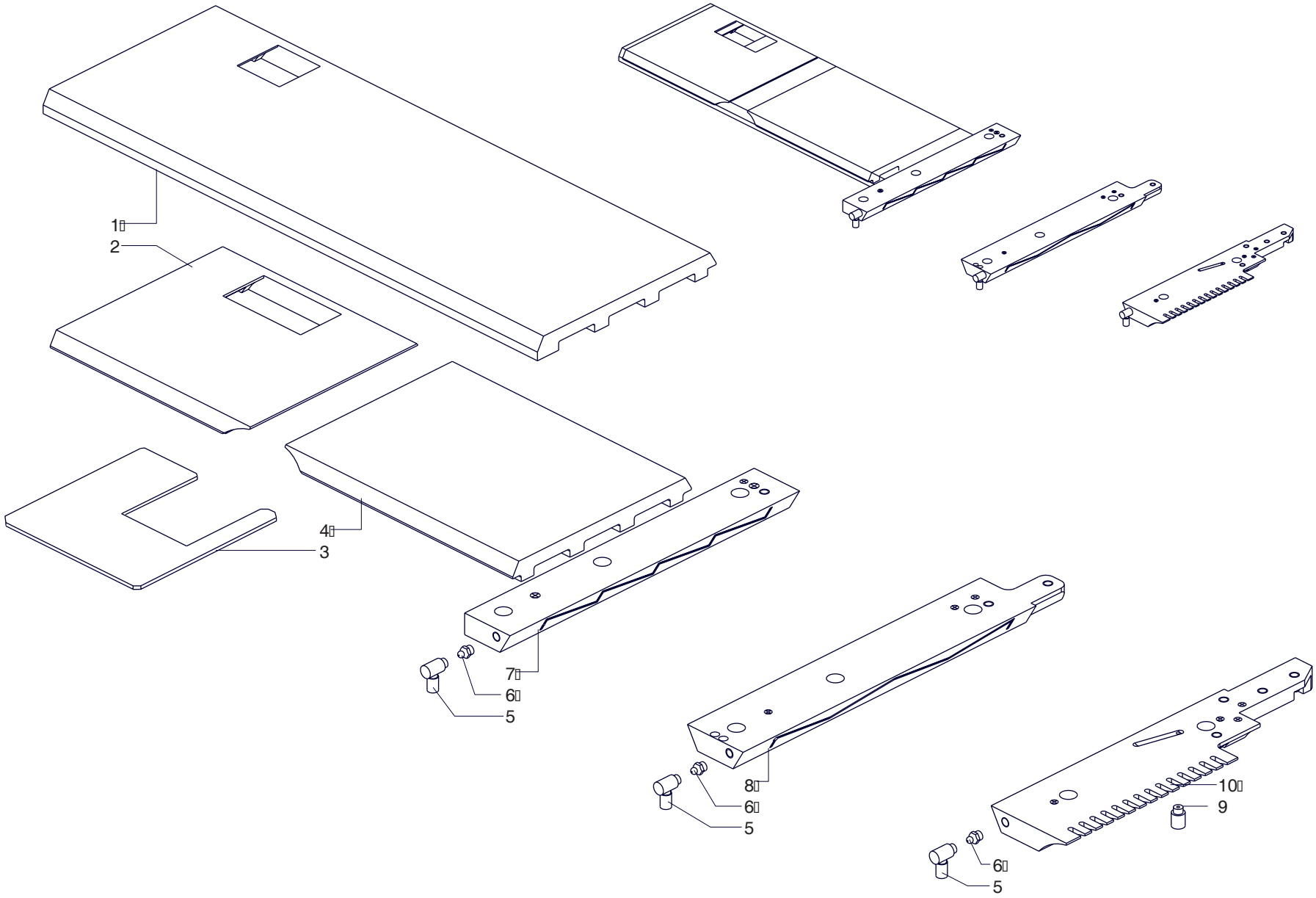


| | | | |
|---|---|---|---|
| scm | **SUPERSET XL** | **PIANI FISSI CROMATI - (01.01.1901 -> - p.20,06,2007)**<br>**CHROMIUM PLATED FIXED TABLES - TABLES FIXES CHROMEES**<br>**VERCHROMTE FESTTISCHE - MESAS FIJAS CROMADAS** | **227-0202-0** |

| scm | SUPERSET XL | PIANI FISSI CROMATI (SOFFIO ARIA) - (p.20,06,2007)<br>CHROMIUM PLATED FIXED TABLES - TABLES FIXES CHROMEES<br>VERCHROMTE FESTTISCHE - MESAS FIJAS CROMADAS | 227-0202-5 |
|---|---|---|---|

| N | P | C | CODICE | Q.TY | DENOMINAZIONE | DESCRIPTION | DESIGNATION | BEZEICHNUNG | DENOMINACION |
|---|---|---|---|---|---|---|---|---|---|
| | 01.01.1901 -> 01.01.3000 | | | | Note: ----- | | | | |
| 1 | | | 0322720413B | 1.00 | PIANO | TABLE | TABLE | TISCH | MESA |
| 2 | | | 0322720412L | 1.00 | PIANO | TABLE | TABLE | TISCH | MESA |
| 3 | | | 0322710113C | 1.00 | SPESSORE | SHIM | CALE | BEILAGE | ESPESOR |
| 4 | | | 0322720411G | 1.00 | PIANO CROMATO | TABLE | TABLE | TISCH | MESA |
| 5 | | | 0001905059C | 3.00 | RACCORDO RAPIDO "L" M | FAST INSERT FITTING (L-SH | RACCORD RAP. "L" M | SCHNELLANSCHLUSS L -STECK | EMP.ATAQ.RAPIDO A 'L' MAC |
| 6 | | | 0000616033E | 3.00 | INGRASSATORE (NIPPLO) | GREASE NIPPLE | NIPPLE | SCHMIERNIPPEL | NIPLE ENGRASADOR |
| 7 | | | 0322720713H | 1.00 | PIANO | TABLE | TABLE | TISCH | MESA |
| 8 | | | 0322720712F | 1.00 | PIANO | TABLE | TABLE | TISCH | MESA |
| 9 | | | 0001904155E | 1.00 | RACC.RAP. DIR.M | FAST INSERT FITTING (STRA | RACCORD RAP. DROIT M | SCHNELLANSCHLUSS (GERADE | EMP.ATAQ.RAPIDO DER.M |
| 10 | | | 0322720711D | 1.00 | PIANO | TABLE | TABLE | TISCH | MESA |

22702015

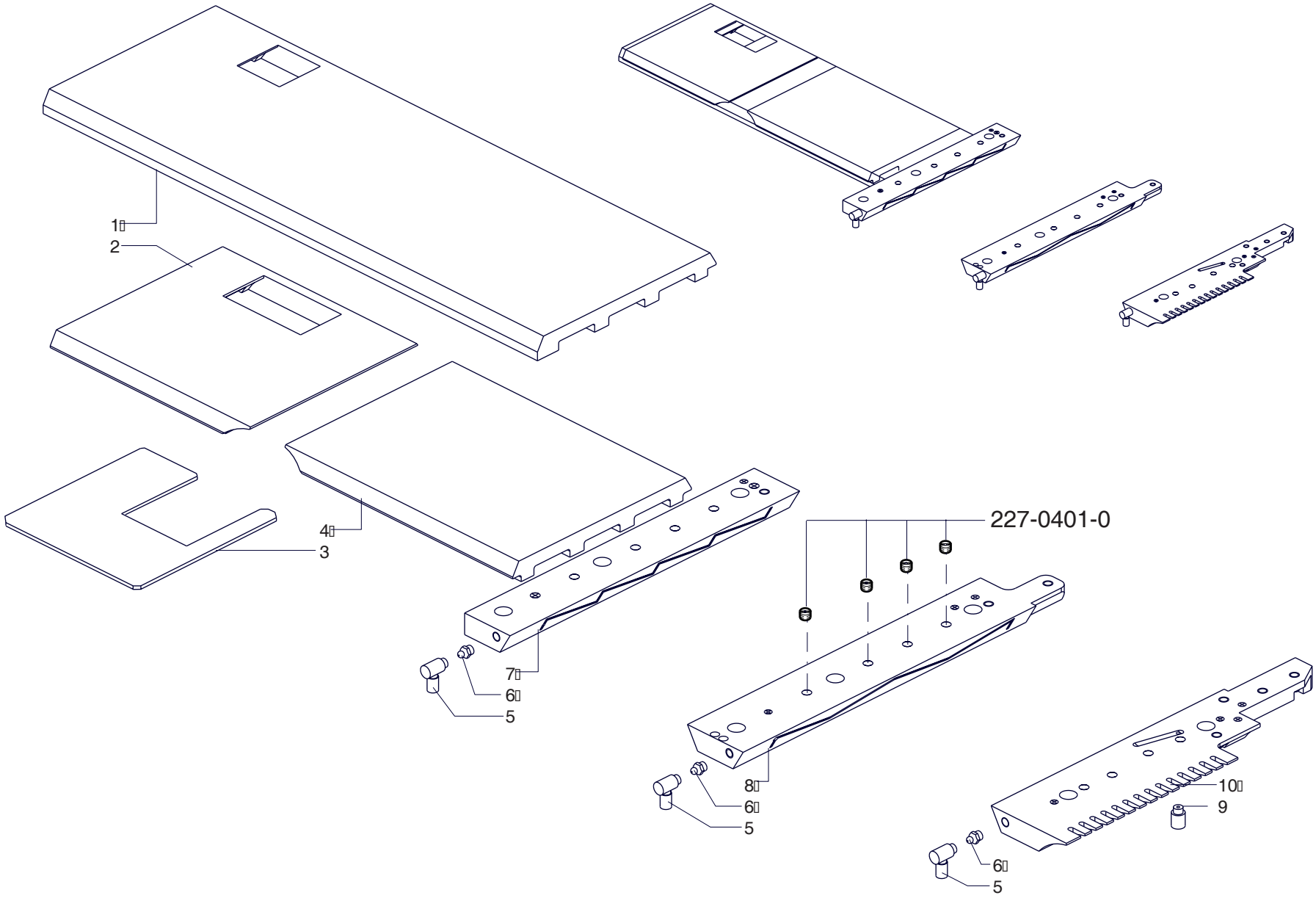


| | | | |
|---|---|---|---|
| scm | **SUPERSET XL** | **PIANI FISSI CROMATI (SOFFIO ARIA) - (01.01.1901 ->  - p.20,06,2007)**<br>**CHROMIUM PLATED FIXED TABLES - TABLES FIXES CHROMEES**<br>**VERCHROMTE FESTTISCHE - MESAS FIJAS CROMADAS** | **227-0202-5** |

| N | P | C | CODICE | Q.TY | DENOMINAZIONE | DESCRIPTION | DESIGNATION | BEZEICHNUNG | DENOMINACION |
|---|---|---|---|---|---|---|---|---|---|
| | 01.01.1901 -> 01.01.3000 | | | | Note: 2822720003E | | | | |
| | 1 | | 0322720609H | 1.00 | PIANO | TABLE | TABLE | TISCH | MESA |
| | 2 | | 0322720608F | 1.00 | PIANO | TABLE | TABLE | TISCH | MESA |
| | 2 | | 0322720618G | 1.00 | PIANO | TABLE | TABLE | TISCH | MESA |
| | 3 | | 0000616033E | 3.00 | INGRASSATORE (NIPPLO) | GREASE NIPPLE | NIPPLE | SCHMIERNIPPEL | NIPLE ENGRASADOR |
| | 4 | | 0001905059C | 3.00 | RACCORDO RAPIDO "L" M | FAST INSERT FITTING (L-SH | RACCORD RAP. "L" M | SCHNELLANSCHLUSS L -STECK | EMP.ATAQ.RAPIDO A 'L' MAC |
| | 5 | | 0322720603E | 4.00 | SETTORE | SECTOR | SECTEUR | SEGMENT | SECTOR |
| | 6 | | 0322720601A | 1.00 | PIANO | TABLE | TABLE | TISCH | MESA |
| | 7 | | 0001904155E | 2.00 | RACC.RAP. DIR.M | FAST INSERT FITTING (STRA | RACCORD RAP. DROIT M | SCHNELLANSCHLUSS (GERADE | EMP.ATAQ.RAPIDO DER.M |
| | 8 | | 0322720617E | 1.00 | PIANO | TABLE | TABLE | TISCH | MESA |
| | 9 | | 0322720602C | 1.00 | LUNETTA | REST | LUNETTE | LUENETTE | LUNETO |
| | 10 | | 0322720622E | 1.00 | PIANO | TABLE | TABLE | TISCH | MESA |
| | 11 | | 0322720604G | 1.00 | PIANO | TABLE | TABLE | TISCH | MESA |
| | 12 | | 0322720605L | 1.00 | PIANO | TABLE | TABLE | TISCH | MESA |
| | 13 | | 0322720616C | 1.00 | SETTORE | SECTOR | SECTEUR | SEGMENT | SECTOR |
| | 14 | | 0322720606B | 1.00 | SETTORE | SECTOR | SECTEUR | SEGMENT | SECTOR |
| | 15 | | 0322720607D | 1.00 | SETTORE | SECTOR | SECTEUR | SEGMENT | SECTOR |
| | 16 | | 0322720625B | 1.00 | PIANO | TABLE | TABLE | TISCH | MESA |
| | 17 | | 0322720610L | 1.00 | PIANO | TABLE | TABLE | TISCH | MESA |
| | 18 | | 0322710113C | 1.00 | SPESSORE | SHIM | CALE | BEILAGE | ESPESOR |

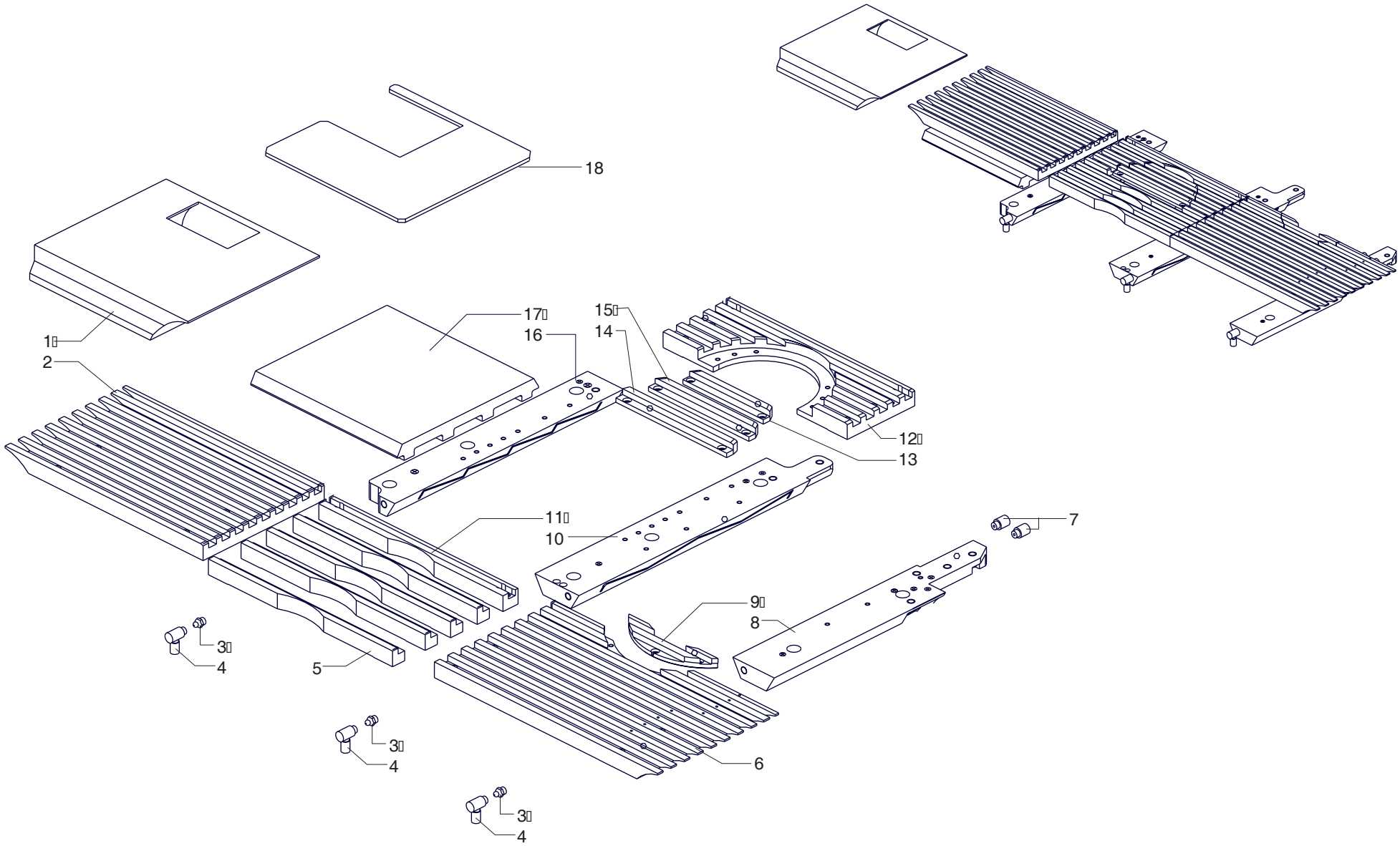
18
1
2
17
16
15
14
12
13
11
10
7
9
8
3
4
5
6

| N | P | C | CODICE | Q.TY | DENOMINAZIONE | DESCRIPTION | DESIGNATION | BEZEICHNUNG | DENOMINACION |
|---|---|---|---|---|---|---|---|---|---|
| | 01.01.1901 -> 01.01.3000 | | | | Note: 2822720011B | | | | |
| | 1 | | 0322720144A | 1.00 | PIANO | TABLE | TABLE | TISCH | MESA |
| | 2 | | 0322720141D | 1.00 | PIANO | TABLE | TABLE | TISCH | MESA |
| | 3 | | 0322710117B | 2.00 | SPESSORE | SHIM | CALE | BEILAGE | ESPESOR |
| | 4 | | 0322720140B | 1.00 | PIANO | TABLE | TABLE | TISCH | MESA |
| | 5 | | 0322710116L | 1.00 | SPESSORE | SHIM | CALE | BEILAGE | ESPESOR |
| | 6 | | 0322720145C | 1.00 | PIANO | TABLE | TABLE | TISCH | MESA |
| | 7 | | 0000307341D | 1.00 | SPINA | PIN | CHEVILLE | STIFT | CLAVIJA |
| | 8 | | 0322720143H | 1.00 | PIANO | TABLE | TABLE | TISCH | MESA |
| | 9 | | 0322720142F | 1.00 | PIANO IN REXILON | REXILON TABLE | TABLE EN REXILON | TISCH AUS REXILON | MESA EN REXILON |
| | 10 | | 0000304260H | 1.00 | VITE | SCREW | VIS | SCHRAUBE | TORNILLO |
| | 11 | | 0000301303G | 2.00 | DADO | NUT | ECROU | MUTTER | TUERCA |
| | 12 | | 0322720146E | 1.00 | PIASTRINA | PLATE | PLAQUE | PLATTE | PLANCHA |
| | 13 | | 0000309307E | 1.00 | VITE | SCREW | VIS | SCHRAUBE | TORNILLO |
| | 14 | | 0311120840G | 1.00 | PIANO IN REXILON | REXILON TABLE | TABLE EN REXILON | TISCH AUS REXILON | MESA EN REXILON |

227-0204

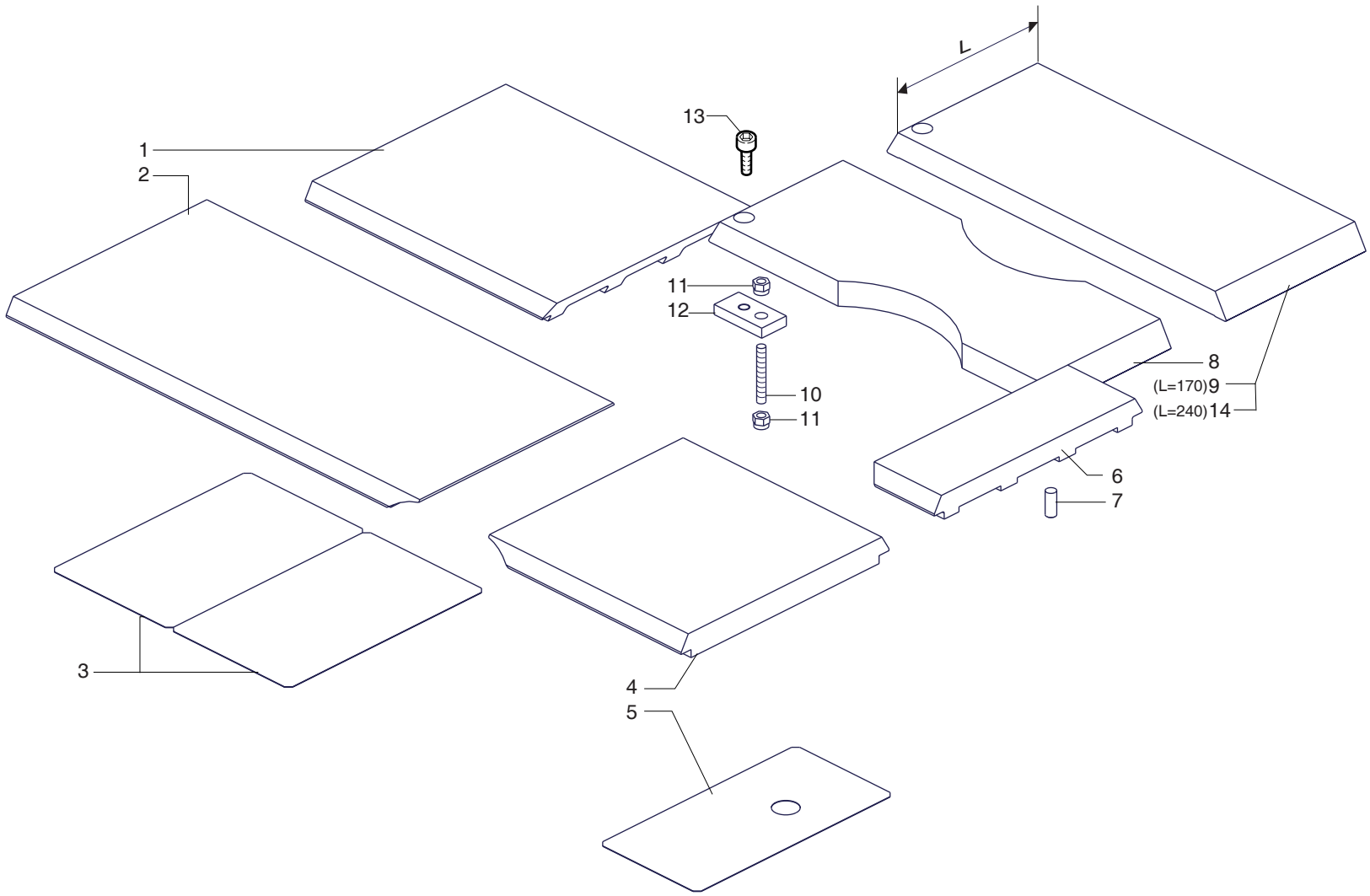


| | | | |
|---|---|---|---|
| scm | SUPERSET XL | PIANI FISSI (UNIVERSALE) - (01.01.1901 -> - p.20,06,2007)<br>FIXED TABLES (UNIVERSAL) - TABLES FIXES (UNIVERSEL)<br>FESTTISCHE (UNIVERSALAGGR.) - MESAS FIXES (UNIVERSAL) | 227-0204-0 |

| scm | SUPERSET XL | PIANI X UNIV. ELETTROM. COLOMBO - (p.20,06,2007)<br>TABLES CCOLOMBO) - TABLES (COLOMBO)<br>TISCH (COLOMBO) - MESAS (COLOMBO) | 227-0204-X |
|---|---|---|---|

| N | P | C | CODICE | Q.TY | DENOMINAZIONE | DESCRIPTION | DESIGNATION | BEZEICHNUNG | DENOMINACION |
|---|---|---|---|---|---|---|---|---|---|
| | 01.01.1901 -> 01.01.3000 | | | | Note: 5222720180L | | | | |
| | 1 | | 0322710117B | 2.00 | SPESSORE | SHIM | CALE | BEILAGE | ESPESOR |
| | 2 | | 0322720146E | 1.00 | PIASTRINA | PLATE | PLAQUE | PLATTE | PLANCHA |
| | 3 | | 0000304260H | 1.00 | VITE | SCREW | VIS | SCHRAUBE | TORNILLO |
| | 4 | | 0000301303G | 2.00 | DADO | NUT | ECROU | MUTTER | TUERCA |
| | 5 | | 0322720181H | 1.00 | PIANO | TABLE | TABLE | TISCH | MESA |
| | 6 | | 0322720145C | 1.00 | PIANO | TABLE | TABLE | TISCH | MESA |
| | 7 | | 0322720184E | 1.00 | SEPARATORE | SEPARATOR | SEPARATEUR | SEPARATOR | SEPARADOR |
| | 8 | | 0000307341D | 1.00 | SPINA | PIN | CHEVILLE | STIFT | CLAVIJA |
| | 9 | | 0322710116L | 1.00 | SPESSORE | SHIM | CALE | BEILAGE | ESPESOR |
| | 10 | | 0322720182A | 2.00 | DEFLETTORE | FLAP | DEFLECTEUR | KLAPPE | DEFLECTOR |
| | 11 | | 0000310059A | 1.00 | VITE | SCREW | VIS | SCHRAUBE | TORNILLO |
| | 12 | | 0322720183C | 1.00 | DEFLETTORE | FLAP | DEFLECTEUR | KLAPPE | DEFLECTOR |
| | 13 | | 0322760122C | 1.00 | SUPPORTO | SUPPORT | SUPPORT | STUETZE | SOPORTE |
| | 14 | | 0322720144A | 1.00 | PIANO | TABLE | TABLE | TISCH | MESA |
| | 15 | | 0000309307E | 1.00 | VITE | SCREW | VIS | SCHRAUBE | TORNILLO |
| | 16 | | 0322760121A | 1.00 | SUPPORTO | SUPPORT | SUPPORT | STUETZE | SOPORTE |
| | 17 | | 0322760181G | 1.00 | GUIDA | GUIDE | GUIDE | FUEHRUNG | GUIA |

2270204X

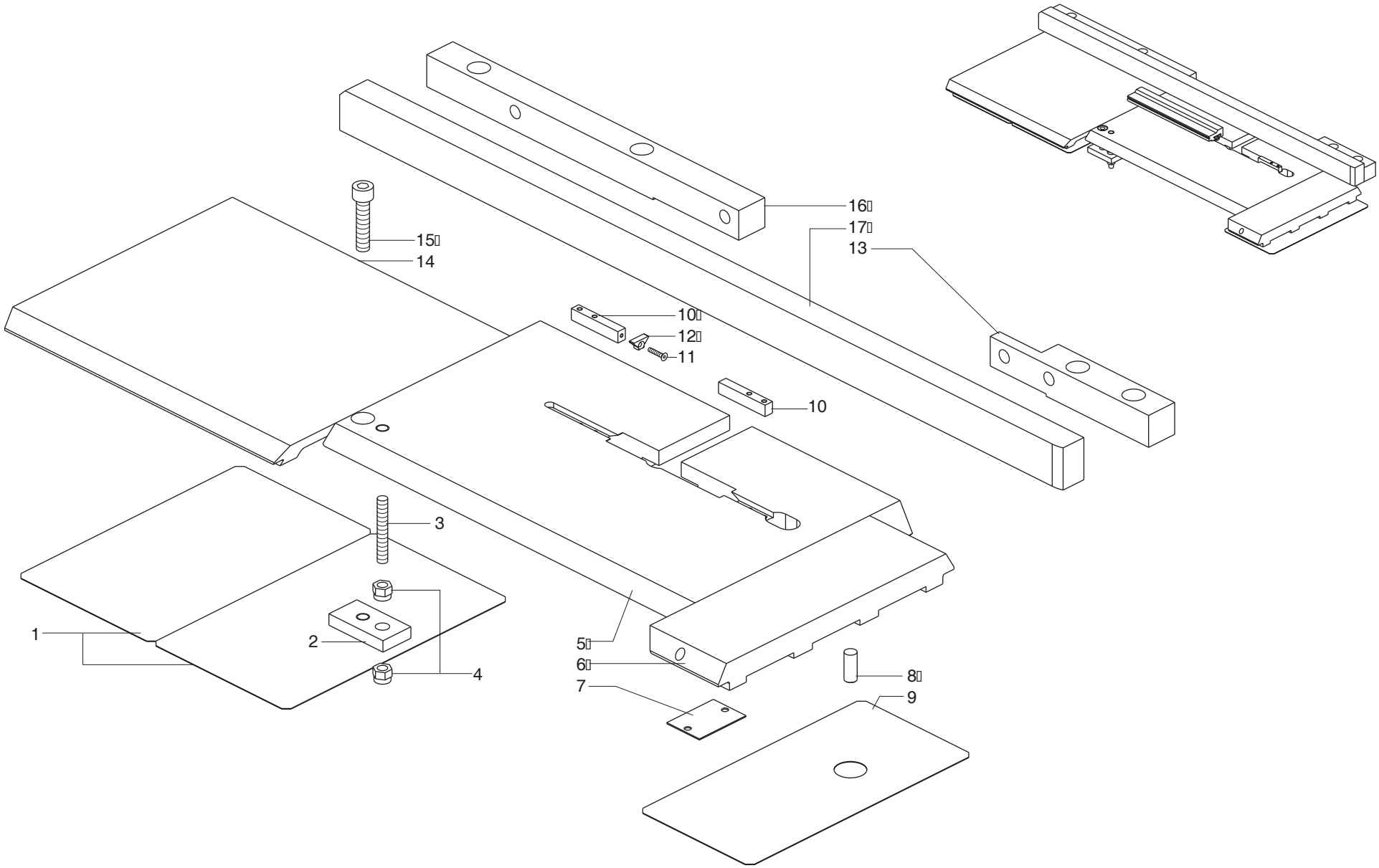


| | | | |
|---|---|---|---|
| scm | **SUPERSET XL** | **PIANI X UNIV. ELETTROM. COLOMBO - (01.01.1901 -> - p.20,06,2007)**<br>**TABLES CCOLOMBO) - TABLES (COLOMBO)**<br>**TISCH (COLOMBO) - MESAS (COLOMBO)** | **227-0204-X** |

| scm | SUPERSET XL | PIANI FISSI CROMATI (UNIVERSALE) - (p.20,06,2007)<br>CHROMIUM PLATED FIXED TABLES (UNIVER.) - TABLES FIXES CHROMEES (GROUPE UNIVERSEL)<br>VERCHROMTE FESTTISCHE (UNIVERSALAGGR.) - MESAS FIJAS CROMADAS (UNIVERSAL) | 227-0205-0 |
|---|---|---|---|

| N | P | C | CODICE | Q.TY | DENOMINAZIONE | DESCRIPTION | DESIGNATION | BEZEICHNUNG | DENOMINACION |
|---|---|---|---|---|---|---|---|---|---|
| | 01.01.1901 -> 01.01.3000 | | | | Note: 2822720012D | | | | |
| | 1 | | 0322720444G | 1.00 | PIANO | TABLE | TABLE | TISCH | MESA |
| | 2 | | 0322720441A | 1.00 | PIANO | TABLE | TABLE | TISCH | MESA |
| | 3 | | 0322710117B | 2.00 | SPESSORE | SHIM | CALE | BEILAGE | ESPESOR |
| | 4 | | 0322720440H | 1.00 | PIANO | TABLE | TABLE | TISCH | MESA |
| | 5 | | 0322710116L | 1.00 | SPESSORE | SHIM | CALE | BEILAGE | ESPESOR |
| | 6 | | 0322720445L | 1.00 | PIANO | TABLE | TABLE | TISCH | MESA |
| | 7 | | 0000307341D | 1.00 | SPINA | PIN | CHEVILLE | STIFT | CLAVIJA |
| | 8 | | 0322720443E | 1.00 | PIANO CROMATO | TABLE | TABLE | TISCH | MESA |
| | 9 | | 0322720442C | 1.00 | PIANO IN REXILON | REXILON TABLE | TABLE EN REXILON | TISCH AUS REXILON | MESA EN REXILON |
| | 10 | | 0000304260H | 1.00 | VITE | SCREW | VIS | SCHRAUBE | TORNILLO |
| | 11 | | 0000301303G | 2.00 | DADO | NUT | ECROU | MUTTER | TUERCA |
| | 12 | | 0322720146E | 1.00 | PIASTRINA | PLATE | PLAQUE | PLATTE | PLANCHA |
| | 13 | | 0000309307E | 1.00 | VITE | SCREW | VIS | SCHRAUBE | TORNILLO |

227-0204

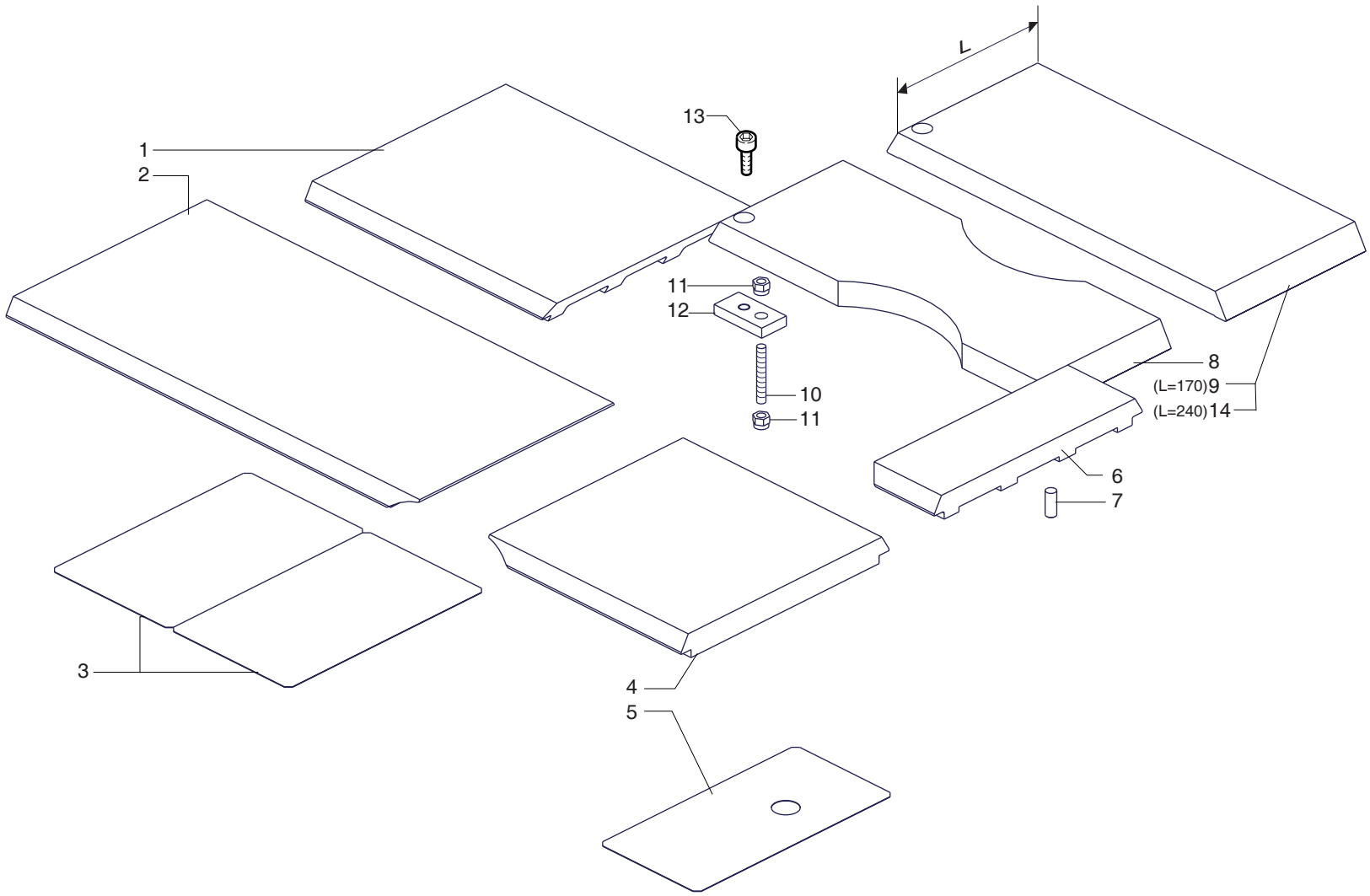


| | | | |
|---|---|---|---|
| scm | SUPERSET XL | PIANI FISSI CROMATI (UNIVERSALE) - (01.01.1901 -> - p.20,06,2007)<br>CHROMIUM PLATED FIXED TABLES (UNIVER.) - TABLES FIXES CHROMEES (GROUPE UNIVERSEL)<br>VERCHROMTE FESTTISCHE (UNIVERSALAGGR.) - MESAS FIJAS CROMADAS (UNIVERSAL) | 227-0205-0 |

| N | P | C | CODICE | Q.TY | DENOMINAZIONE | DESCRIPTION | DESIGNATION | BEZEICHNUNG | DENOMINACION |
|---|---|---|---|---|---|---|---|---|---|
| | 01.01.1901 -> 01.01.3000 | | | | Note: 2822720013F | | | | |
| | 1 | | 0322720615A | 1.00 | PIANO | TABLE | TABLE | TISCH | MESA |
| | 2 | | 0322720612D | 1.00 | PIANO | TABLE | TABLE | TISCH | MESA |
| | 3 | | 0322710117B | 2.00 | SPESSORE | SHIM | CALE | BEILAGE | ESPESOR |
| | 4 | | 0322720613F | 1.00 | PIANO | TABLE | TABLE | TISCH | MESA |
| | 5 | | 0322710116L | 1.00 | SPESSORE | SHIM | CALE | BEILAGE | ESPESOR |
| | 6 | | 0322720614H | 1.00 | PIANO | TABLE | TABLE | TISCH | MESA |
| | 7 | | 0000307341D | 1.00 | SPINA | PIN | CHEVILLE | STIFT | CLAVIJA |
| | 8 | | 0322720143H | 1.00 | PIANO | TABLE | TABLE | TISCH | MESA |
| | 9 | | 0322720142F | 1.00 | PIANO IN REXILON | REXILON TABLE | TABLE EN REXILON | TISCH AUS REXILON | MESA EN REXILON |
| | 10 | | 0000304260H | 1.00 | VITE | SCREW | VIS | SCHRAUBE | TORNILLO |
| | 11 | | 0000301303G | 2.00 | DADO | NUT | ECROU | MUTTER | TUERCA |
| | 12 | | 0322720146E | 1.00 | PIASTRINA | PLATE | PLAQUE | PLATTE | PLANCHA |
| | 13 | | 0000309307E | 1.00 | VITE | SCREW | VIS | SCHRAUBE | TORNILLO |

227-0206

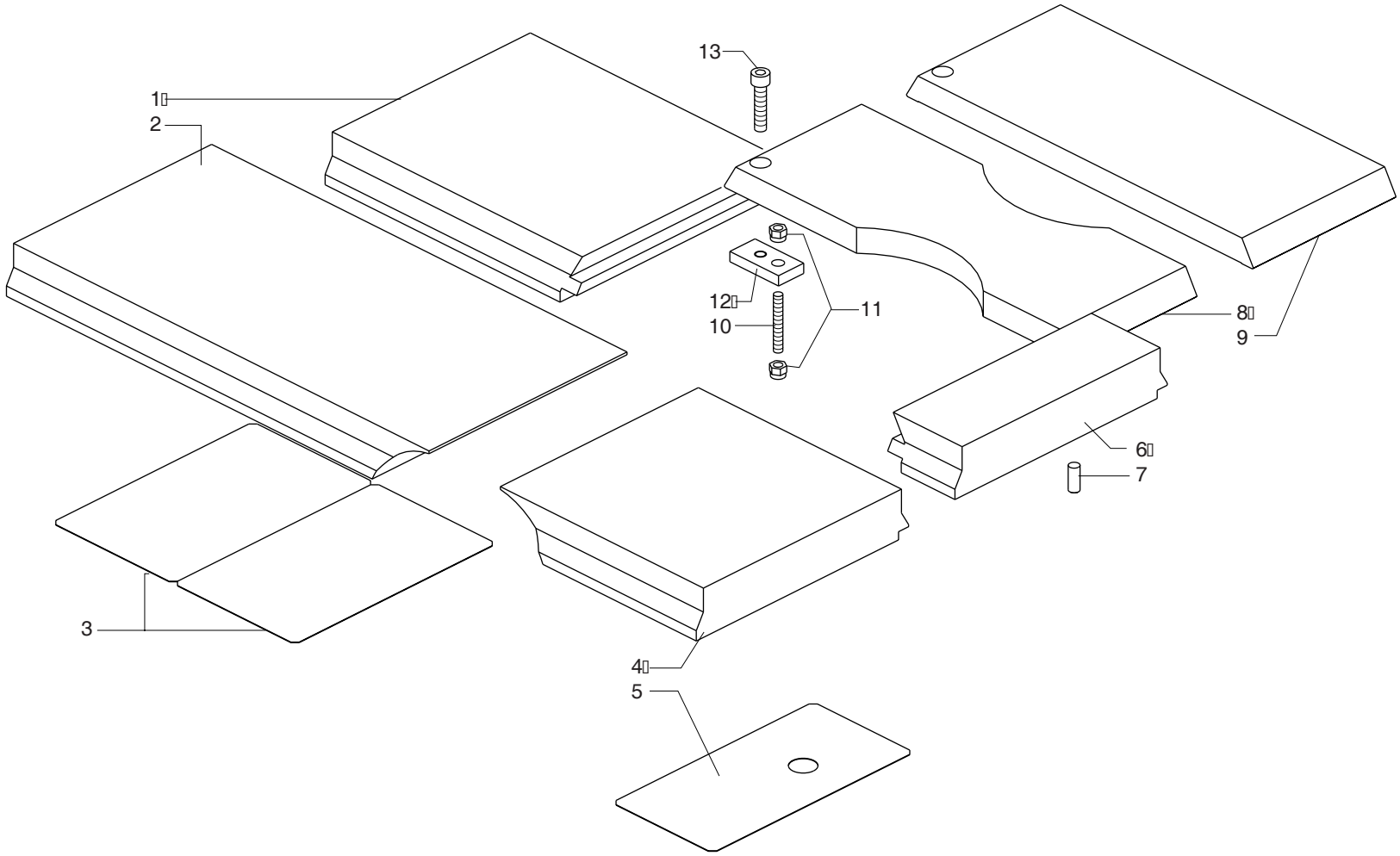


| scm | SUPERSET XL | PIANI SCANALATI (UNIVERSALE) - (01.01.1901 -> - p.20,06,2007)<br>GROOVED TABLES (UNIVERSAL) - TABLES CANNELEES (UNIVERSEL)<br>GENUTETE TISCHE (UNIVERSALAGGR.) - MESAS SCANALATI (UNIVERSAL) | 227-0206-0 |
|---|---|---|---|

| scm | SUPERSET XL | PIANO IN ENTRATA (REGOLAZIONI) - (p.20,06,2007)<br>INFEED TABLE - TABLE EN ENTREE<br>AUFGABETISCH - MESA DE ENTRADA | 227-0207-0 |
|---|---|---|---|

| N | P | C | CODICE | Q.TY | DENOMINAZIONE | DESCRIPTION | DESIGNATION | BEZEICHNUNG | DENOMINACION |
|---|---|---|---|---|---|---|---|---|---|
| | 01.01.1901 -> 01.01.3000 | | | | Note: 2822750010F | | | | |
| 1 | | | 0322750106G | 2.00 | PERNO | PIN | PIVOT | BOLZEN | PERNO |
| 2 | | | 0310150017F | 1.00 | PERNO | PIN | PIVOT | BOLZEN | PERNO |
| 3 | | | 0000301868F | 2.00 | GHIERA | RING NUT | EMBOUT | NUTMUTTER | COLLAR |
| 4 | | | 0319450149L | 2.00 | BUSSOLA | BUSH | DOUILLE | BUCHSE | BUJE |
| 5 | | | 0322750100D | 2.00 | BIELLA | CONNECTING ROD | BIELLE | PLEUELSTANGE | BIELA |
| 6 | | | 0322750112L | 1.00 | LEVA | LEVER | LEVIER | HEBEL | PALANCA |
| 7 | | | 0000601020L | 2.00 | BOCCOLA AUTOL. | SELF-LUBRICATING BUSH | DOUILLE AUTOLUBRIFIANTE | SELBSTSCHMIER. BUCHSE | ANILL.AUTOLUB. |
| 8 | | | 0316023800F | 1.00 | POMELLO | BALL GRIP | GRIFFE | KUGELGRIFF | POMO |
| 9 | | | 0316023700D | 1.00 | PIASTRA | PLATE | PLAQUE | PLATTE | PLANCHA |
| 10 | | | 0321950122A | 1.00 | MOLLA | SPRING | RESSORT | FEDER | RESORTE |
| 11 | | | 0322750107L | 1.00 | ATTACCO | CONNECTING ROD | BARRE FIXATION | STAB | CONEXION |
| 12 | | | 0322750103A | 1.00 | PERNO | PIN | PIVOT | BOLZEN | PERNO |
| 13 | | | 0319461231F | 1.00 | REGISTRO | REGULATOR | REGULATEUR | REGLER | REGULADOR |
| 14 | | | 0311150209F | 1.00 | PIATTO | PLATE | PLAT | PLATTE | PLATO |
| 15 | | | 0000606227E | 7.00 | CUSCINETTO | BEARING | ROULEMENT | LAGER | COJINETE |
| 16 | | | 0000305294B | 1.00 | ROSETTA | WASHER | RONDELLE | SCHEIBE | ARANDELA |

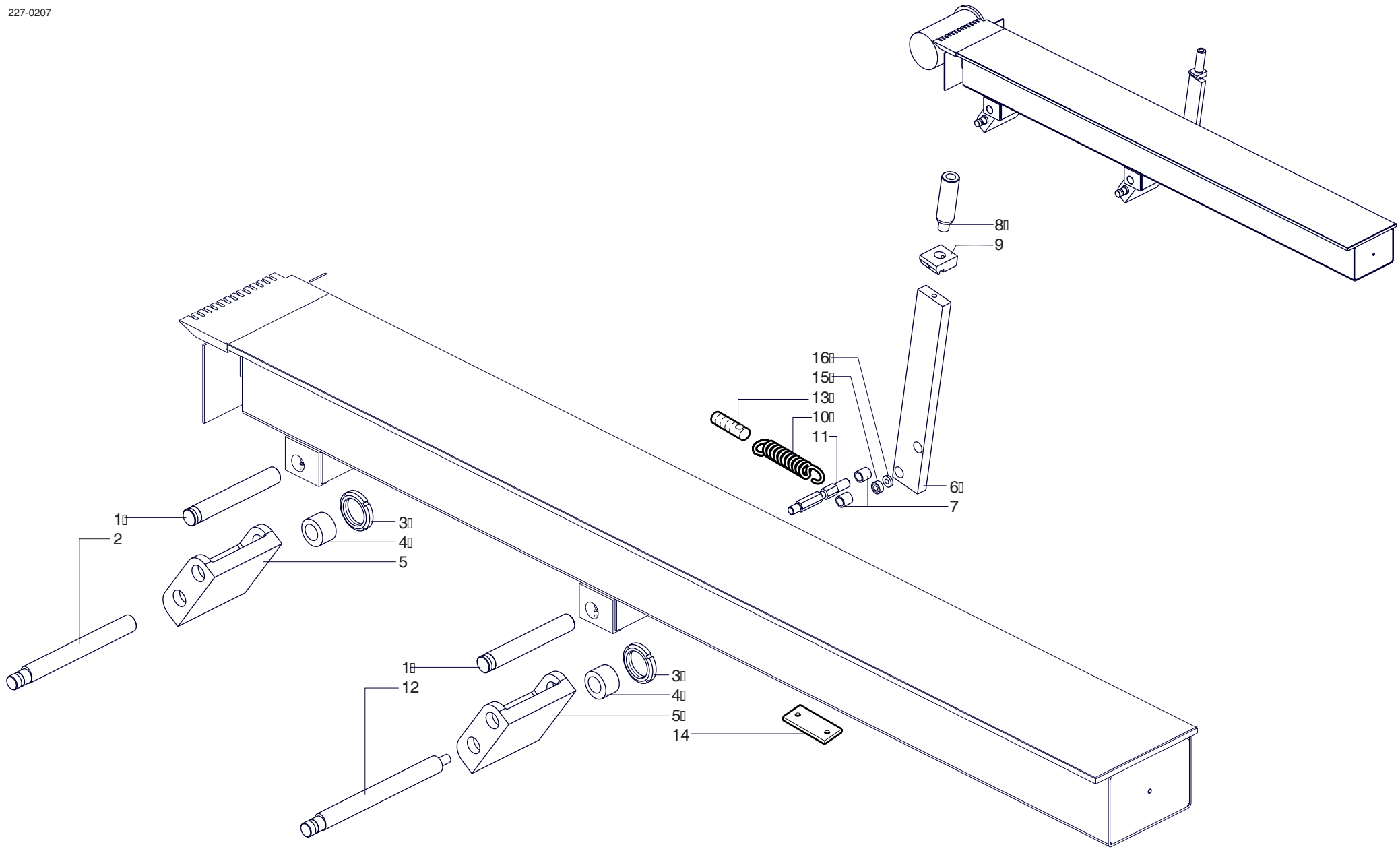


scm

**SUPERSET XL**

**PIANO IN ENTRATA (REGOLAZIONI) - (01.01.1901 -> - p.20,06,2007)**
**INFEED TABLE - TABLE EN ENTREE**
**AUFGABETISCH - MESA DE ENTRADA**

**227-0207-0**

| scm | SUPERSET XL | PIANO IN ENTRATA - (p.20,06,2007)<br>INFEED TABLE - TABLE EN ENTREE<br>AUFGABETISCH - MESA DE ENTRADA | 227-0208-0 |
|---|---|---|---|

| N | P | C | CODICE | Q.TY | DENOMINAZIONE | DESCRIPTION | DESIGNATION | BEZEICHNUNG | DENOMINACION |
|---|---|---|---|---|---|---|---|---|---|
| | 01.01.1901 -> 01.01.3000 | | | | Note: 2822750035L | | | | |
| | 1 | | 0322750109D | 1.00 | RIGHETTA | RULE | REGLETTE | SCHIENE | REGLA |
| | 2 | | 0322750108B | 1.00 | CONVOGLIATRUCIOLI | CHIPS CONVEYOR | CONVOYEUR COPEAUX | SPAENELEITBLECH | CONDUCTOR VIRUTA |
| | 3 | | 0322750102H | 1.00 | PIANO | TABLE | TABLE | TISCH | MESA |
| | 3 | | 0322750122A | 1.00 | INSERTO | INSERT | PIECE INTERCALAIRE | EINSATZ | INSERTO |
| | 3 | | 0322750163G | 1.00 | INSERTO | INSERT | PIECE INTERCALAIRE | EINSATZ | INSERTO |
| | 3 | | 0322750188A | 1.00 | INSERTO | INSERT | PIECE INTERCALAIRE | EINSATZ | INSERTO |
| | 3 | | 0322750189C | 1.00 | INSERTO | INSERT | PIECE INTERCALAIRE | EINSATZ | INSERTO |
| | 3 | | 0322750190D | 1.00 | INSERTO | INSERT | PIECE INTERCALAIRE | EINSATZ | INSERTO |
| | 4 | | 0522750101A | 1.00 | PIANO L=2000 | TABLE | TABLE | TISCH | MESA |
| | 4 | | 0522750110L | 1.00 | PIANO L=2500 | TABLE | TABLE | TISCH | MESA |
| | 4 | | 0522750116C | 1.00 | PIANO L=2500 X BASE 1 | TABLE | TABLE | TISCH | MESA |
| | 4 | | 0522750121C | 1.00 | PIANO L=2000 CROMATO | TABLE | TABLE | TISCH | MESA |
| | 4 | | 0522750123G | 1.00 | PIANO L=2000 P. SCANALATI | TABLE | TABLE | TISCH | MESA |
| | 4 | | 0522750124L | 1.00 | PIANO L=2500 P. SCANALATI | TABLE | TABLE | TISCH | MESA |
| | 4 | | 0522750125B | 1.00 | PIANO L=1180 CROMATO | TABLE | TABLE | TISCH | MESA |
| | 4 | | 0522750126D | 1.00 | PIANO L=1180 | TABLE | TABLE | TISCH | MESA |
| | 4 | | 0522750127F | 1.00 | PIANO L=2000 C/LUBR. | TABLE | TABLE | TISCH | MESA |
| | 4 | | 0522750128H | 1.00 | PIANO | TABLE | TABLE | TISCH | MESA |
| | 4 | | 0522750130B | 1.00 | PIANO L=2500 CROMATO | TABLE | TABLE | TISCH | MESA |
| | 4 | | 0522750131D | 1.00 | PIANO L=2500 CROM. X CAR. | TABLE | TABLE | TISCH | MESA |
| | 4 | | 0522750161G | 1.00 | PIANO L=2000 P. SCANALATI | TABLE | TABLE | TISCH | MESA |
| | 4 | | 0522750162L | 1.00 | PIANO L=2500 P. SCANALATI | TABLE | TABLE | TISCH | MESA |
| | 4 | | 0522750180G | 1.00 | PIANO L=2000 X 260 | TABLE | TABLE | TISCH | MESA |
| | 4 | | 0522750181L | 1.00 | PIANO L=2000 X 260 P.SCAN | TABLE | TABLE | TISCH | MESA |
| | 4 | | 0522750182B | 1.00 | PIANO L=2000 X 260 CROM. | TABLE | TABLE | TISCH | MESA |
| | 4 | | 0522750183D | 1.00 | PIANO L=2000 X 260 CR.P.S | TABLE | TABLE | TISCH | MESA |
| | 4 | | 0522750184F | 1.00 | PIANO L=2500 X 260 | TABLE | TABLE | TISCH | MESA |
| | 4 | | 0522750185H | 1.00 | PIANO L=2500 X 260 P.SCAN | TABLE | TABLE | TISCH | MESA |
| | 4 | | 0522750186A | 1.00 | PIANO L=2500 X 260 CROM. | TABLE | TABLE | TISCH | MESA |
| | 4 | | 0522750187C | 1.00 | PIANO L=2500 X 260 CROM. | TABLE | TABLE | TISCH | MESA |
| | 4 | | 0522750191A | 1.00 | PIANO L=1300 | TABLE | TABLE | TISCH | MESA |
| | 4 | | 0522750192C | 1.00 | PIANO L=260 | TABLE | TABLE | TISCH | MESA |
| | 5 | | 0522750129A | 1.00 | PIANO | TABLE | TABLE | TISCH | MESA |
| | 6 | | 0322750301A | 2.00 | BUSSOLA | BUSH | DOUILLE | BUCHSE | BUJE |
| | 7 | | 0322750303E | 2.00 | VITE | SCREW | VIS | SCHRAUBE | TORNILLO |
| | 8 | | 0322750302C | 2.00 | GHIERA | RING NUT | EMBOUT | NUTMUTTER | COLLAR |

227-0208

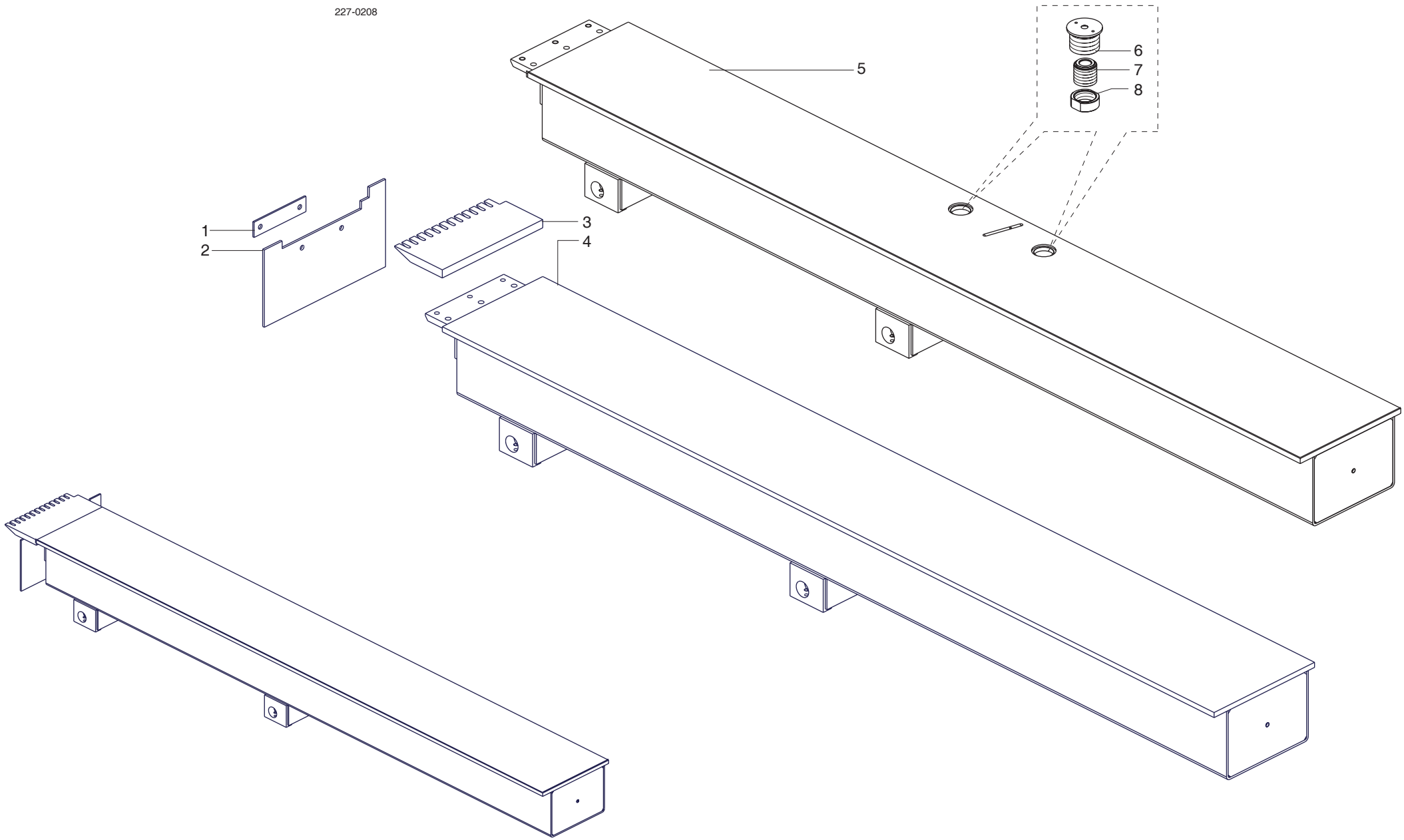


| | | | |
|---|---|---|---|
| scm | SUPERSET XL | PIANO IN ENTRATA - (01.01.1901 -> - p.20,06,2007)<br>INFEED TABLE - TABLE EN ENTREE<br>AUFGABETISCH - MESA DE ENTRADA | 227-0208-0 |

| N | P | C | CODICE | Q.TY | DENOMINAZIONE | DESCRIPTION | DESIGNATION | BEZEICHNUNG | DENOMINACION |
|---|---|---|---|---|---|---|---|---|---|
| | 01.01.1901 -> 01.01.3000 | | | | Note: 2822720093E | | | | |
| codice funzione<br>3122700100B | | | | | | | | | |
| | 1 | | 0322720202D | 1.00 | PIANO | TABLE | TABLE | TISCH | MESA |
| | 1 | | 0322720203F | 1.00 | PIANO X DOPPIO RULLO | TABLE | TABLE | TISCH | MESA |
| | 1 | | 0322720403A | 1.00 | PIANO | TABLE | TABLE | TISCH | MESA |
| | 2 | | 0321420413F | 1.00 | INSERTO | INSERT | PLAQUETTE | EINSATZ | INSERTO |
| | 3 | | 0322720201B | 1.00 | PIANO | TABLE | TABLE | TISCH | MESA |
| | 3 | | 0322720402H | 1.00 | PIANO CROMATO | TABLE | TABLE | TISCH | MESA |
| | 4 | | 0322720406G | 1.00 | PIANO | TABLE | TABLE | TISCH | MESA |

101-0210

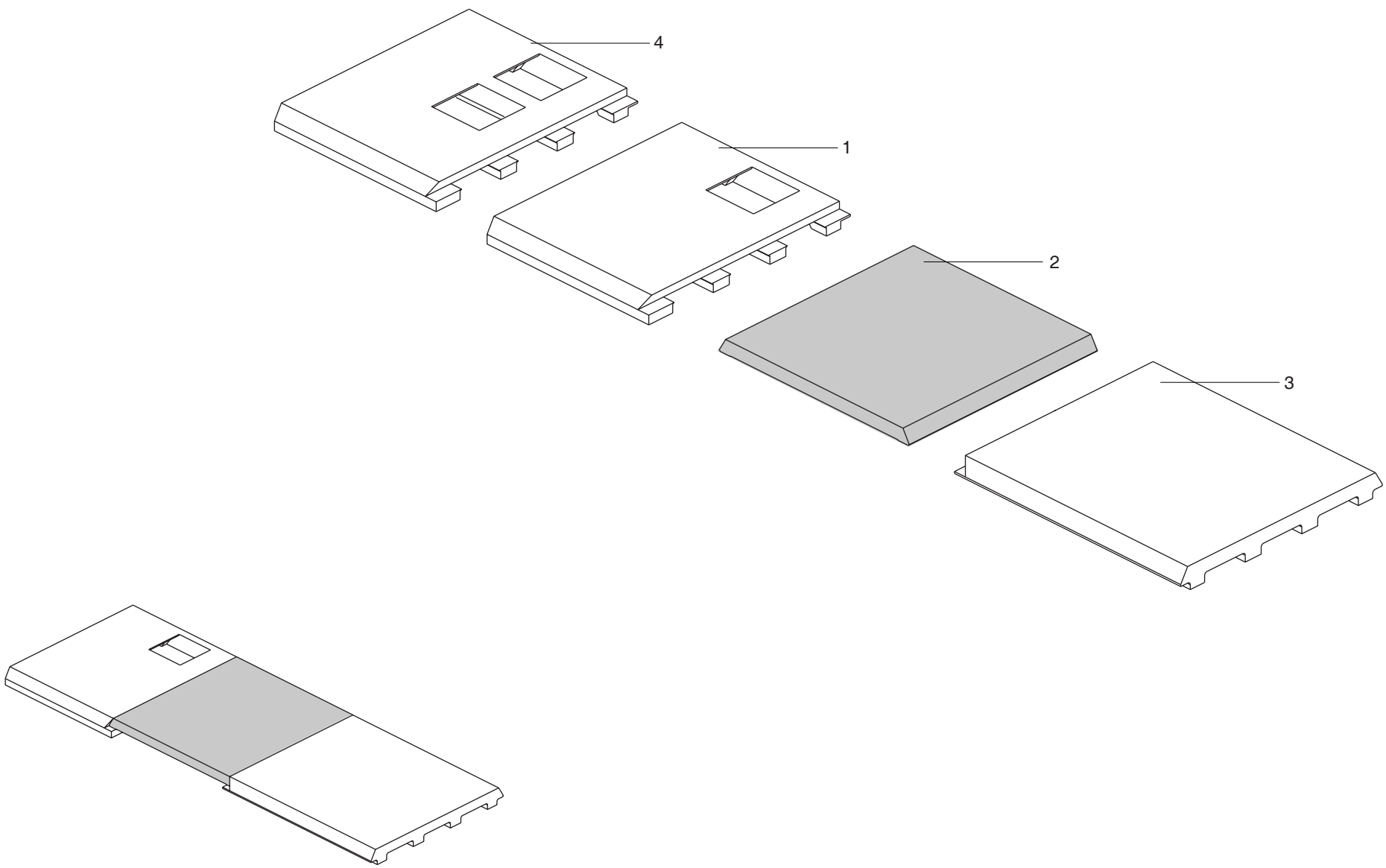


| | | | |
|---|---|---|---|
| scm | SUPERSET XL | PIANI - (01.01.1901 -> - p.20,06,2007)<br>TABLES - TABLES<br>TISCH - MESAS | 227-0210-0 |

| N | P | C | CODICE | Q.TY | DENOMINAZIONE | DESCRIPTION | DESIGNATION | BEZEICHNUNG | DENOMINACION |
|---|---|---|---|---|---|---|---|---|---|
| | 01.01.1901 -> 01.01.3000 | | | | Note: 2822720091A | | | | |
| | 1 | | 0522720116F | 1.00 | PIANO | TABLE | TABLE | TISCH | MESA |
| | 1 | | 0522720416C | 1.00 | PIANO | TABLE | TABLE | TISCH | MESA |
| | 2 | | 0522720114B | 1.00 | PIANO | TABLE | TABLE | TISCH | MESA |
| | 2 | | 0522720414H | 1.00 | PIANO CROMATO | TABLE | TABLE | TISCH | MESA |
| | 3 | | 0321420522G | 1.00 | INSERTO | INSERT | PLAQUETTE | EINSATZ | INSERTO |
| | 4 | | 0522720120D | 1.00 | PIANO | TABLE | TABLE | TISCH | MESA |

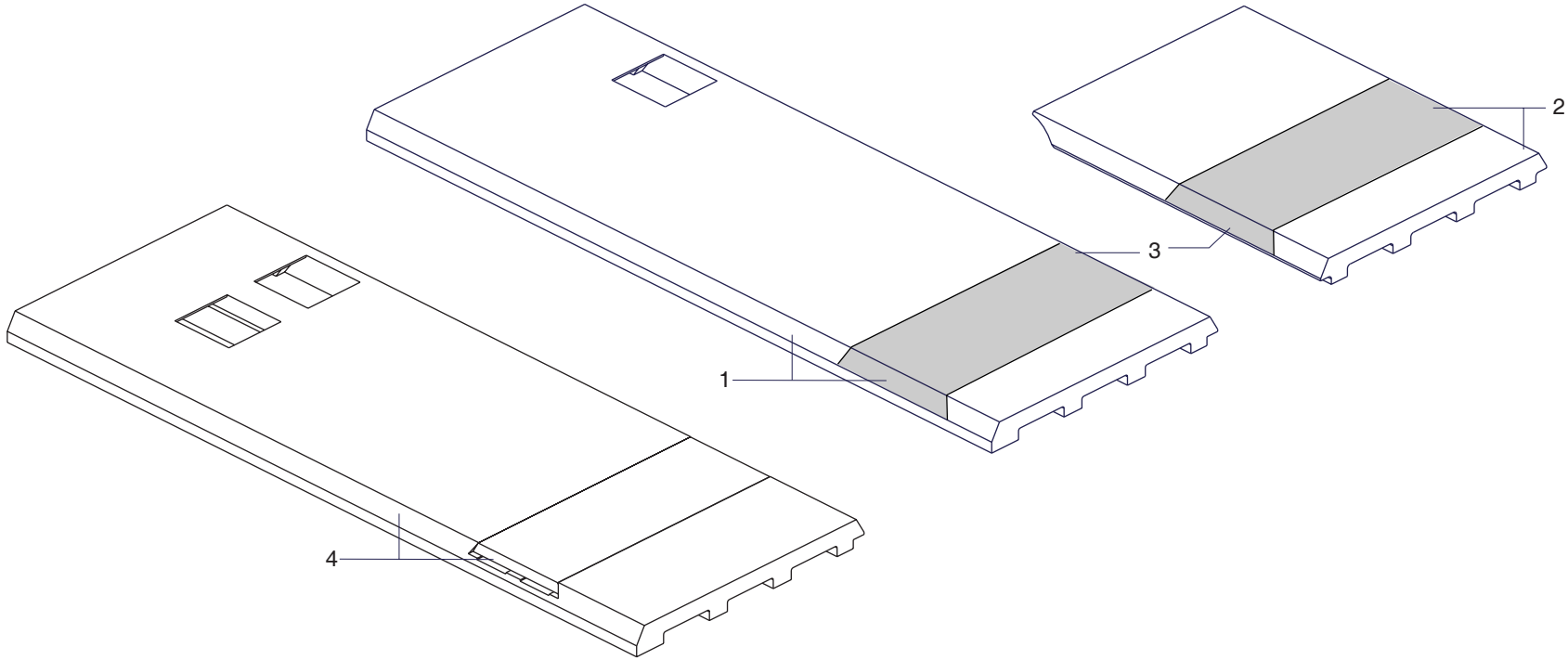
1
2
3
4

| scm | SUPERSET XL | LUBRIFICAZIONE PIANO - (p.20,06,2007)<br>WORKTABLE LUBRICATION - GRAISSAGE DU PLAN DE TRAVAIL<br>TISCHSCHMIERUNG - LUBRIFICACION MESA | 227-0301-0 |
|---|---|---|---|

| N | P | C | CODICE | Q.TY | DENOMINAZIONE | DESCRIPTION | DESIGNATION | BEZEICHNUNG | DENOMINACION |
|---|---|---|---|---|---|---|---|---|---|
| | 01.01.1901 -> 01.01.3000 | | | | Note: 3022788000D | | | | |
| | 1 | | 0001508428E | 1.00 | POMPA | PUMP | POMPE | PUMPE | BOMBA |
| | 2 | | 0710120600E | 1.00 | POMPA TRIF. | PUMP TRIF. 220/380 50-60 | POMPE TRIF. 220/380 50-60 | PUMPE TRIF. 220/380 50-60 | BOMBA TRIF. 220/380 50-60 |
| | 3 | | 0321910801C | 1.00 | TARGA | PLATE | PLAQUE | SCHILD | TARJETA |
| | 3 | | 0321910802E | 1.00 | TARGA | PLATE | PLAQUE | SCHILD | TARJETA |
| | 3 | | 0321910803G | 1.00 | TARGA | PLATE | PLAQUE | SCHILD | TARJETA |
| | 4 | | 0001916014A | 1.00 | VALVOLA | VALVE | SOUPAPE | VENTIL | VALVULA |
| | 5 | | 0002402040E | 1.00 | OLIO | OIL | HUILE | OEL | ACEITE |
| | 6 | | 0000640402H | 3.00 | TUBO | HOSE | TUYAU | SCHLAUCH | TUBO |
| | 7 | | 2739090101E | 1.00 | VALV.DOSAGGIO M10X1 | VALV.DOSAGGIO M10X1 | VALV.DOSAGGIO M10X1 | VALV.DOSAGGIO M10X1 | VALV.DOSAGGIO M10X1 |
| | 8 | | 0001502051G | 1.00 | RIPARTITORE 4V.F | 4-WAY DISTRIBUTOR | DISTRIB.4 VOIES | 4-WEGEVERTEILER | REPART.4 V ROSC.H |
| | 9 | | 0001904116C | 1.00 | RACCORDO | FITTING | RACCORD | ANSCHLUSS | CONEXION |
| | 10 | | 0000628003F | 1.00 | MOTOPOMPA | MOTOR PUMP | MOTOPOMPE | MOTORPUMPE | MOTOBOMBA |
| | 10 | | 0000628011C | 1.00 | MOTOPOMPA | MOTOR PUMP | MOTOPOMPE | MOTORPUMPE | MOTOBOMBA |
| | 11 | | 0339024300E | 2.00 | RIDUZIONE | REDUCTION | REDUCTION | REDUZIER STUECK | REDUCCION |
| | 12 | | 0001508832B | 1.00 | VALVOLA REGOLATRICE | VALVE | SOUPAPE DE REGLAGE | EINSTELLVENTIL | VALVULA REGULADORA |
| | 13 | | 0001509516C | 11.00 | DOSATORE | DOSATOR | DOSEUR | DOSIERER | DOSIFICADOR |
| | 14 | | 0001908155L | 2.00 | TAPPO M12 | PLUG | BOUCHON | STOPSEL | TAPA |
| | 15 | | 0001906089G | 2.00 | RACCORDO | FITTING | RACCORD | ANSCHLUSS | CONEXION |
| | 16 | | 0001502050E | 1.00 | RIPARTITORE 8 VIE | DISTRIBUTOR | DISTRIBUTEUR | VERTEILER | REPARTIDOR |
| | 17 | | 0324330313B | 1.00 | RIPARTITORE 4 VIE | DISTRIBUTOR | DISTRIBUTEUR | VERTEILER | REPARTIDOR |
| | 18 | | 0001904064B | 2.00 | RACCORDO | FITTING | RACCORD | ANSCHLUSS | CONEXION |

227-0301

-- (I) USARE "SCORRILEGNO WÜRTH" ▯
-- (GB) USE "WÜRTH RESIN NEUTRALIZER"▯
-- (X) YYYYYYYYYYYYYYYYYYYYYYYY▯
-- (X) YYYYYYYYYYYYYYYYYYYYYYYY▯
-- (X) YYYYYYYYYYYYYYYYYYYYYYYY▯
-- (X) YYYYYYYYYYYYYYYYYYYYYYYY

3

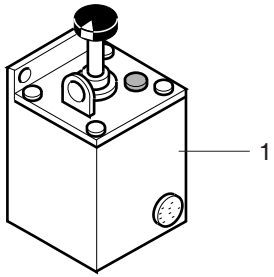


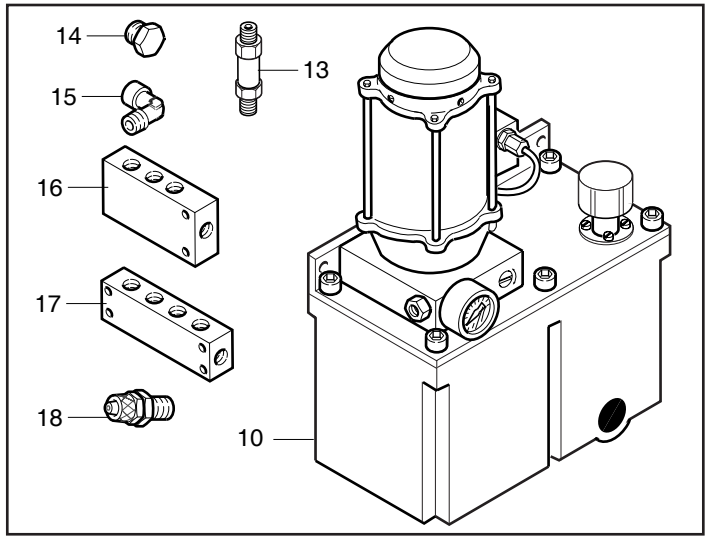


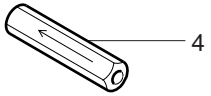


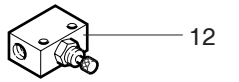


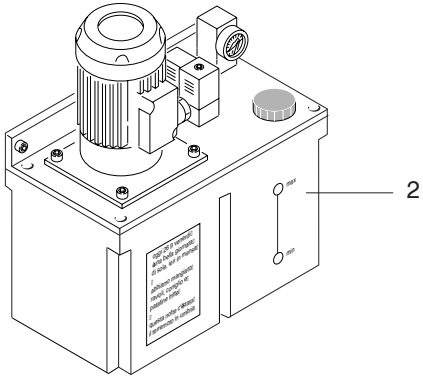


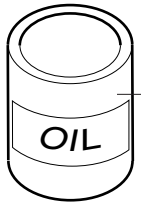


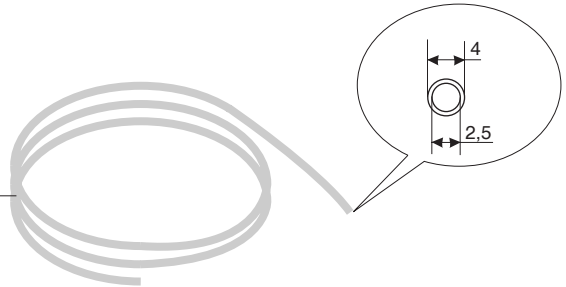


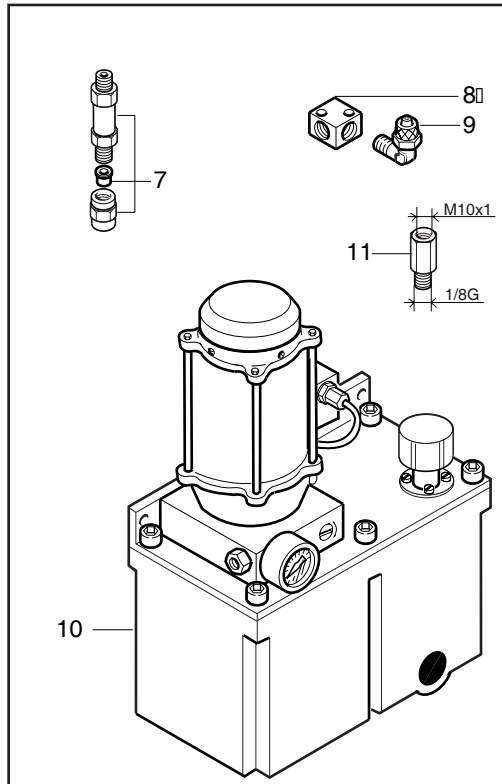


VERSIONE "TTL"▯
"TTL" VERSION▯
VERSION "TTL"▯
"TTL" VERSION▯
"TTL" VERSION

| N | P | C | CODICE | Q.TY | DENOMINAZIONE | DESCRIPTION | DESIGNATION | BEZEICHNUNG | DENOMINACION |
|---|---|---|---|---|---|---|---|---|---|
| | 01.01.1901 -> 01.01.3000 | | | | Note: 3022785050F | | | | |
| | 1 | | 2722785101L | 1.00 | ASSIEME FILTRO | FILTER UNIT | ENSEMBLE FILTRE | FILTEREINHEIT | CONJ. FILTRO |
| | 1 | | 2722785201B | 0.00 | ASSIEME FILTRO | FILTER UNIT | ENSEMBLE FILTRE | FILTEREINHEIT | CONJ. FILTRO |
| | 1 | | 2722785202D | 1.00 | ASS. FILTRO+PRESS.+MANOM. | FILTER UNIT | ENSEMBLE FILTRE | FILTEREINHEIT | CONJ. FILTRO |
| | 1 | | 2937220503E | 1.00 | ASSIEME FILTRO | FILTER UNIT | ENSEMBLE FILTRE | FILTEREINHEIT | CONJ. FILTRO |
| | 1 | | 2937220504G | 1.00 | ASS. GR.TRATT.ARIA G.1/4 | | | | |
| | 2 | | 0000640054L | 1.00 | TUBO | HOSE | TUYAU | SCHLAUCH | TUBO |
| | 3 | | 0302110057E | 1.00 | TARGA | PLATE | PLAQUE | SCHILD | TARJETA |
| | 3 | | 0302110058G | 1.00 | TARGA | PLATE | PLAQUE | SCHILD | TARJETA |
| | 3 | | 0302110059L | 1.00 | TARGA | PLATE | PLAQUE | SCHILD | TARJETA |
| | 4 | | 0522770112H | 1.00 | PANNELLO | PANEL | PANNEAU | TAFEL | PANEL |
| | 5 | | 0322775004A | 1.00 | TARGA | PLATE | PLAQUE | SCHILD | TARJETA |
| | 6 | | 0000640019F | 1.00 | TAPPO A SCATTO | PLUG (WITH RELEASE) | BOUCHON A JEU | STOEPSEL M.FEDER | TAPA A DISP. |
| | 7 | | 0001502104A | 1.00 | VALVOLA | VALVE | VALVE | VENTIL | VALVULA |
| | 8 | | 0001505066C | 2.00 | MANOMETRO | PRESSURE GAUGE | MANOMETRE | MANOMETER | MANOMETRO |
| | 9 | | 0001508845L | 2.00 | REGOLATORE | REGULATOR | REGULATEUR | REGLER | REGULADOR |
| | 10 | | 0000640034G | 3.00 | TAPPO A SCATTO | PLUG (WITH RELEASE) | BOUCHON A JEU | STOEPSEL M.FEDER | TAPA A DISP. |
| | 11 | | 0000640004D | 3.00 | TAPPO A SCATTO | PLUG (WITH RELEASE) | BOUCHON A JEU | STOEPSEL M.FEDER | TAPA A DISP. |
| | 12 | | 0000640036B | 1.00 | TAPPO A SCATTO | PLUG | BOUCHON | STOEPSEL | TAPA E DISPARO |
| | 13 | | 0001508832B | 1.00 | VALVOLA REGOLATRICE | VALVE | SOUPAPE DE REGLAGE | EINSTELLVENTIL | VALVULA REGULADORA |
| | 14 | | 0001902055A | 1.00 | VALVOLA | VALVE | VALVE | VENTIL | VALV. |
| | 15 | | 0319013515F | 1.00 | POMOLO | KNOB | POIGNEE | KUGELGRIFF | POMEL |
| | 16 | | 0001904001H | 2.00 | RACCORDO | FITTING | RACCORD | ANSCHLUSS | CONEXION |
| | 17 | | 2921920201G | 1.00 | ASS.IMP. PNEUM. VELO ARIA | PNEUMATIC SYSTEM | ND | ND | ND |
| | 18 | | 0324150403E | 12.00 | SOFFIATORE | BLOWER | SOUFFLEUR | BLAESER | SOPLADOR |
| | 19 | | 0331140023A | 1.00 | DISTRIBUTORE | DISTRIBUTOR | DISTRIBUTEUR | VERTEILER | DISTRIBUIDOR |
| | 20 | | 0001344082B | 1.00 | ELETTROVALVOLA V.110 | SOLENOID VALVE | ELECTROVALVE | MAGNETVENTIL | ELECTROVALVULA |
| | 21 | | 0001344087C | 2.00 | ELETTROVALVOLA | SOLENOID VALVE | ELECTROVALVE | MAGNETVENTIL | ELECTROVALV. |
| | 22 | | 0001508862E | 1.00 | VALVOLA | VALVE | VALVE | VENTIL | VALV. |
| | 23 | | 0001505004B | 1.00 | MANOMETRO | PRESSURE GAUGE | MANOMETRE | MANOMETER | MANOMETRO |

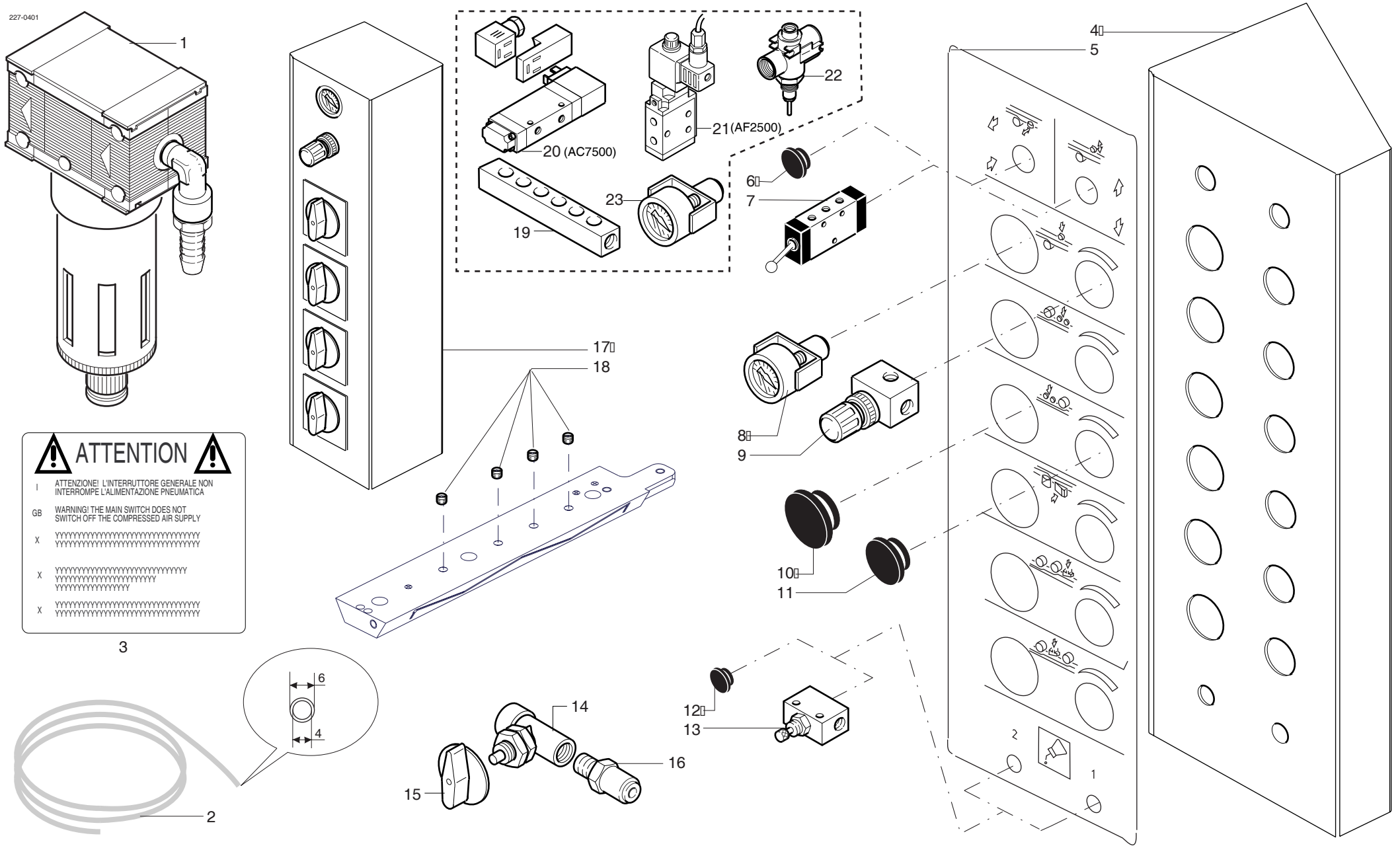


| | | | |
|---|---|---|---|
| scm | SUPERSET XL | COMPONENTI PNEUMATICI - (01.01.1901 -> - p.20,06,2007)<br>PNEUMATIC COMPONENTS - COMPOSANTS PNEUMATIQUES<br>PNEUMATISCHE BESTANDTEILE - COMPONENTES NEUMATICOS | 227-0401-0 |

| scm | SUPERSET XL | CONTA ORE - (p.20,06,2007)<br>HOUR-METER - COMPTEUR DE HEURES<br>STUNDENZAEHLER - CUENTAHORAS | 227-0402-0 |
|---|---|---|---|

| N | P | C | CODICE | Q.TY | DENOMINAZIONE | DESCRIPTION | DESIGNATION | BEZEICHNUNG | DENOMINACION |
|---|---|---|---|---|---|---|---|---|---|
| | 01.01.1901 -> 01.01.3000 | | | | Note: 2822780020D | | | | |
| | 1 | | 0001347084L | 1.00 | CONTAORE | HOUR-METER | COMPTEUR DE HEURES | STUNDENZAEHLER | CUENTAHORAS |
| | 1 | | 0001347085B | 1.00 | CONTAORE | HOUR-METER | COMPTEUR DE HEURES | STUNDENZAEHLER | CUENTAHORAS |

227-0402

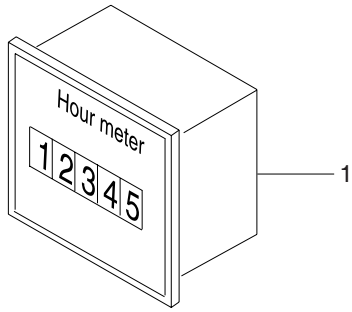

| scm | SUPERSET XL | MOLTIPLICATORE DI PRESSIONE - (p.20,06,2007)<br>RELISHING UNIT - MULTIPLICATEUR<br>AUFSATZGETRIEBE - MULTIPLICADOR | 227-0403-0 |
|---|---|---|---|

| N | P | C | CODICE | Q.TY | DENOMINAZIONE | DESCRIPTION | DESIGNATION | BEZEICHNUNG | DENOMINACION |
|---|---|---|---|---|---|---|---|---|---|
| | 01.01.1901 -> 01.01.3000 | | | | Note: ----- | | | | |
| | 1 | | 2987772011E | 1.00 | ASSIEME MOLTIPLICATORE | SET | ENSEMBLE | SATZ SCHAUFEL | CONJ. |
| | 2 | | 0001508113F | 1.00 | MOLTIPLICATORE | MULTIPLEXER | MULTIPLICATEUR | MULTIPLIKATOR | MULTIPLICADOR |
| | 3 | | 0001509130C | 1.00 | VALVOLA | VALVE | SOUPAPE | VENTIL | VALVULA |
| | 4 | | 0001906029A | 1.00 | RACCORDO | FITTING | RACCORD | ANSCHLUSS | CONEXION |
| | 5 | | 0336223853C | 1.00 | ANGOLARE | SQUARE SUPPORT | CORNIERE | WINKELSUPPORT | ESQUINERO |
| | 6 | | 0002033488L | 1.00 | SERBATOIO | TANK | RESERVOIR | TANK | DEPOSITO |
| | 7 | | 0001902158L | 1.00 | RUBINETTO A SFERA | (BALL COCK) | A BILLE | KUGELHAHN | CAN.ESFERA |
| | 8 | | 0331140023A | 1.00 | DISTRIBUTORE | DISTRIBUTOR | DISTRIBUTEUR | VERTEILER | DISTRIBUIDOR |

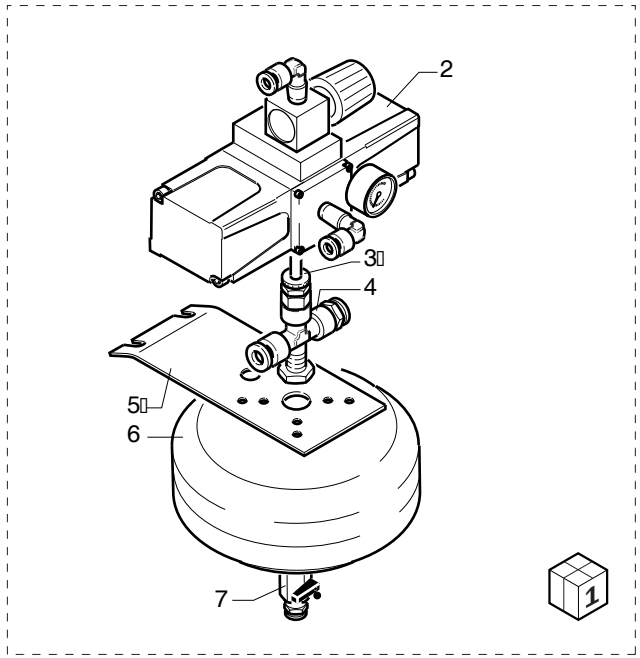
2
3
4
5
6
7
1

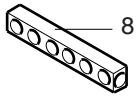
8

| scm | SUPERSET XL | CABINA ANTIRUMORE - (p.20,06,2007)<br>SOUNDPROOF BOOTH - CABINE INSONORISANTE<br>SCHALLSCHUTZKABINE - CABINA ANTI-RUIDOS | 227-0501-0 |
|---|---|---|---|

| N | P | C | CODICE | Q.TY | DENOMINAZIONE | DESCRIPTION | DESIGNATION | BEZEICHNUNG | DENOMINACION |
|---|---|---|---|---|---|---|---|---|---|
| | 01.01.1901 -> 01.01.3000 | | | | Note: 2822770010A | | | | |
| | 0 | | 1111111111F | 0.00 | INDICE | POINTER | INDICATEUR | ZEIGER | INDICE |
| | 1 | | 0522770501D | 1.00 | CHIUSURA | COVER | PIECE DE FERMETURE | DECKEL | CIERRE |
| | 2 | | 0522770553D | 1.00 | SCATOLA | BOX | BOITE | KASTEN | CAJA |
| | 3 | | 0522770502F | 1.00 | CHIUSURA | COVER | PIECE DE FERMETURE | DECKEL | CIERRE |

227-0501

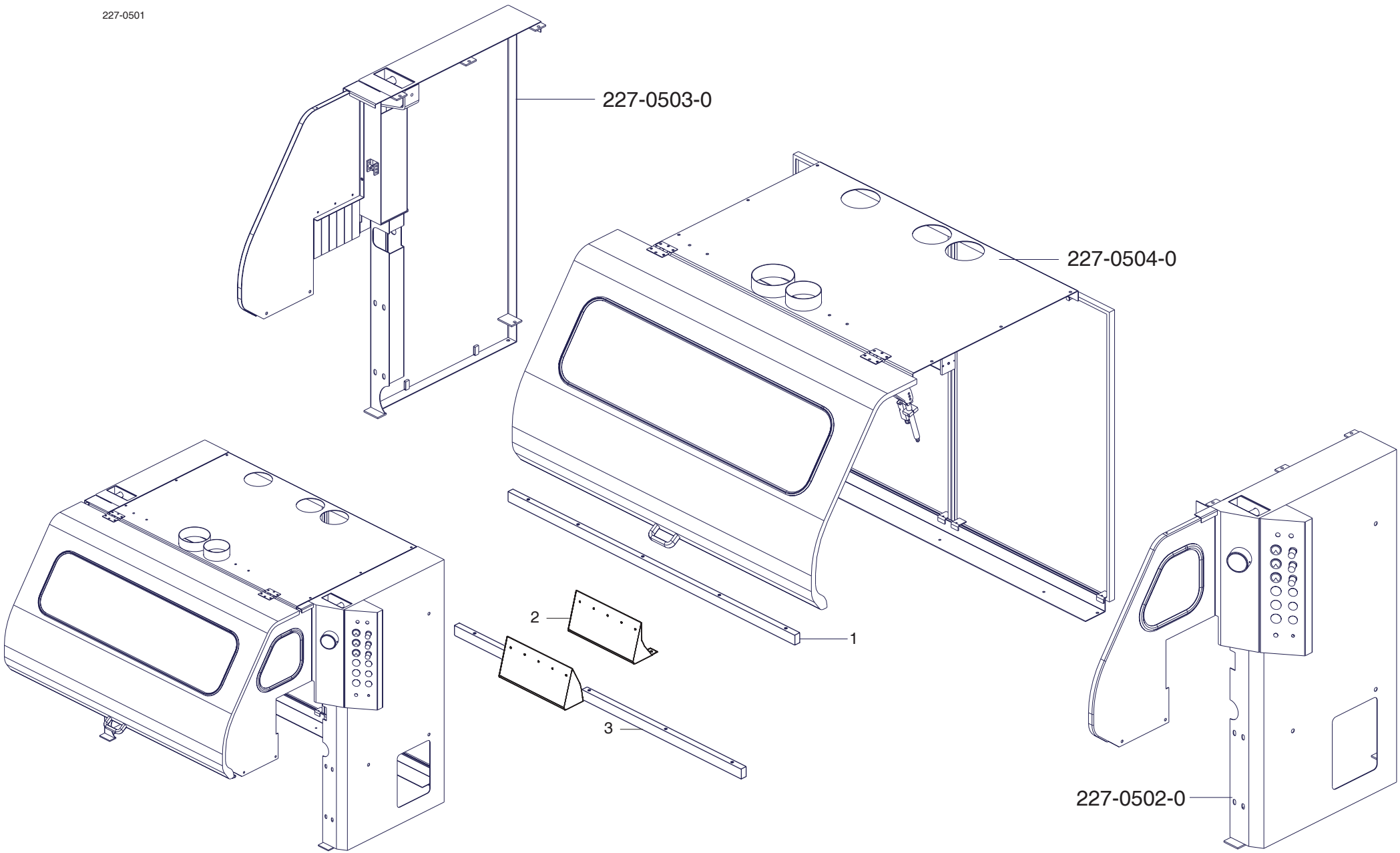


| | | | |
|---|---|---|---|
| scm | SUPERSET XL | CABINA ANTIRUMORE - (01.01.1901 -> - p.20,06,2007)<br>SOUNDPROOF BOOTH - CABINE INSONORISANTE<br>SCHALLSCHUTZKABINE - CABINA ANTI-RUIDOS | 227-0501-0 |

| N | P | C | CODICE | Q.TY | DENOMINAZIONE | DESCRIPTION | DESIGNATION | BEZEICHNUNG | DENOMINACION |
|---|---|---|---|---|---|---|---|---|---|
| | 01.01.1901 -> 01.01.3000 | | | | Note: 2822770020B | | | | |
| | 0 | | 1111111111F | 0.00 | INDICE | POINTER | INDICATEUR | ZEIGER | INDICE |
| | 1 | | 0522770552B | 1.00 | CHIUSURA | COVER | PIECE DE FERMETURE | DECKEL | CIERRE |
| | 2 | | 0322770551E | 1.00 | CHIUSURA | COVER | PIECE DE FERMETURE | DECKEL | CIERRE |
| | 3 | | 0522770553D | 1.00 | SCATOLA | BOX | BOITE | KASTEN | CAJA |

22705015

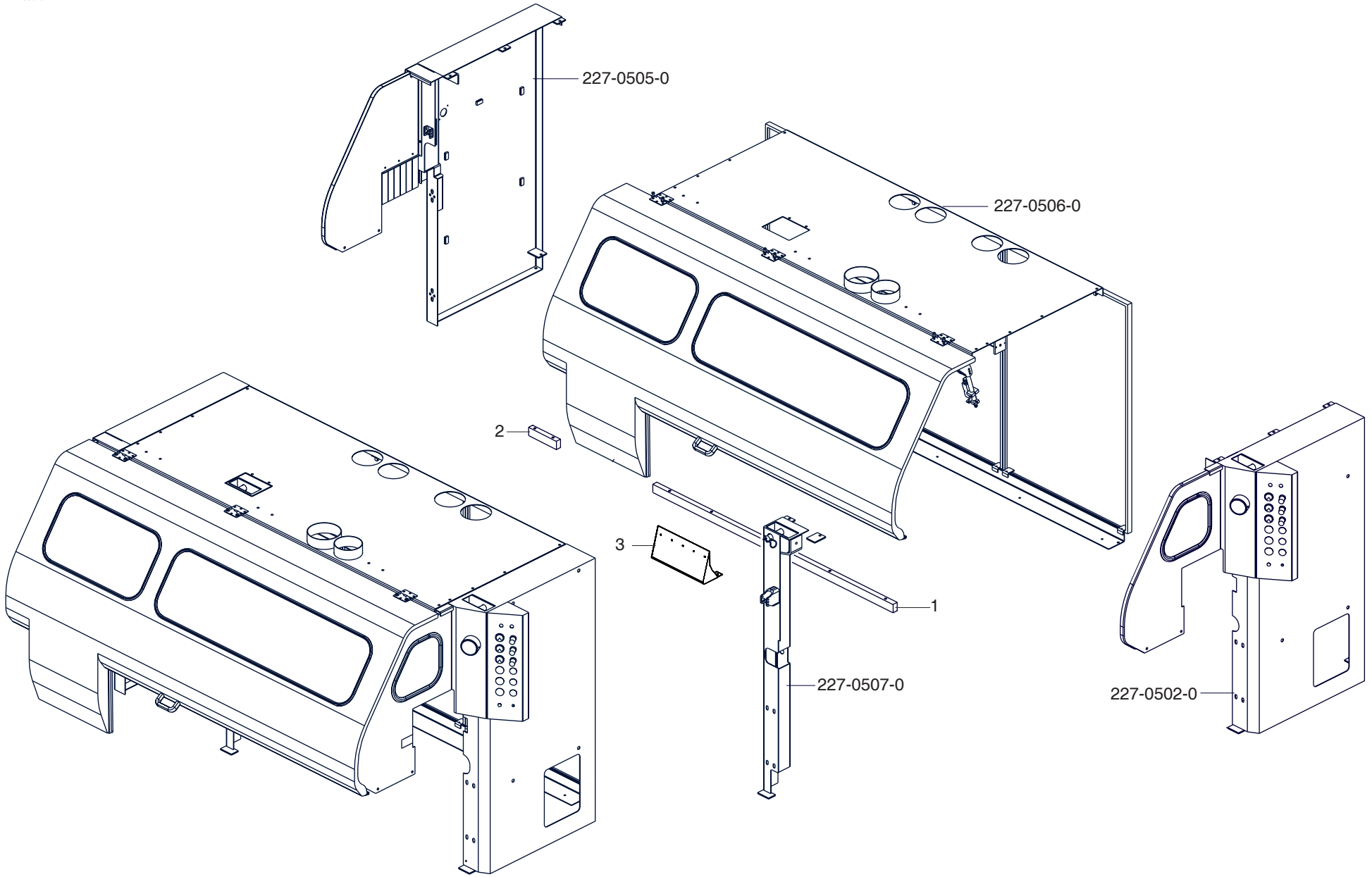


| | | | |
|---|---|---|---|
| scm | SUPERSET XL | CABINA ANTIRUMORE - (01.01.1901 -> - p.20,06,2007)<br>SOUNDPROOF BOOTH - CABINE INSONORISANTE<br>SCHALLSCHUTZKABINE - CABINA ANTI-RUIDOS | 227-0501-5 |

| scm | SUPERSET XL | CABINA ANTIRUMORE - (p.20,06,2007)<br>SOUNDPROOF BOOTH - CABINE INSONORISANTE<br>SCHALLSCHUTZKABINE - CABINA ANTI-RUIDOS | 227-0502-0 |
|---|---|---|---|

| N | P | C | CODICE | Q.TY | DENOMINAZIONE | DESCRIPTION | DESIGNATION | BEZEICHNUNG | DENOMINACION |
|---|---|---|---|---|---|---|---|---|---|
| | 01.01.1901 -> 01.01.3000 | | | | Note: 2822770011C | | | | |
| | 1 | | 0522770118B | 1.00 | SPALLA LATO ENTRATA | SIDE | FLANC | SEITE | ESPALDAR LADO ENTRADA |
| | 1 | | 0522770511E | 1.00 | SPALLA DX PER H=180 | SIDE | FLANC | SEITE | ESPALDAR |
| | 2 | | 2722770105A | 1.00 | SPONDA | SIDE | BORDE | WAND | COMPUERTA |
| | 2 | | 2722770130C | 1.00 | SPONDA X CARIC. BASE 1 | SIDE | BORDE | WAND | COMPUERTA |
| | 3 | | 0321940456G | 2.00 | DISTANZIALE | SPACER | ENTRETOISE | DISTANZSTUECK | DISTANCIADOR |
| | 4 | | 0000646025E | 2.00 | COPIGLIA | SPLIT PIN | GOUPILLE | SPLINT | BLOQUEO |
| | 5 | | 0322770113F | 1.00 | PERNO | PIN | PIVOT | BOLZEN | PERNO |
| | 6 | | 2722770124A | 1.00 | SPONDA | SIDE | BORDE | WAND | COMPUERTA |
| | 6 | | 2722770512D | 1.00 | SPONDA | SIDE | BORDE | WAND | COMPUERTA |
| | 7 | | 0302110080C | 1.00 | TARGHETTA | RATING PLATE | PLAQUETTE | SCHILD | TARJETA |
| | 8 | | 0302110070B | 1.00 | TARGA | PLATE | PLAQUE | SCHILD | TARJETA |
| | 9 | | 0302110071D | 1.00 | TARGA | PLATE | PLAQUE | SCHILD | TARJETA |
| | 10 | | 0302110195G | 1.00 | TARGHETTA | RATING PLATE | PLAQUETTE | SCHILD | TARJETA |
| | 11 | | 0539012163D | 1.00 | CARTER | COVER | CARTER | DECKEL | CARTER |
| | 12 | | 0522770514B | 1.00 | CARTER | COVER | CARTER | DECKEL | CARTER |
| | 13 | | 0322770109H | 1.00 | PIATTO | PLATE | PLAT | PLATTE | PLATO |
| | 14 | | 0322770129A | 1.00 | ANGOLARE | SQUARE SUPPORT | CORNIERE | WINKELSUPPORT | ESQUINERO |
| | 15 | | 0322770516B | 1.00 | CHIUSURA | COVER | PIECE DE FERMETURE | DECKEL | CIERRE |

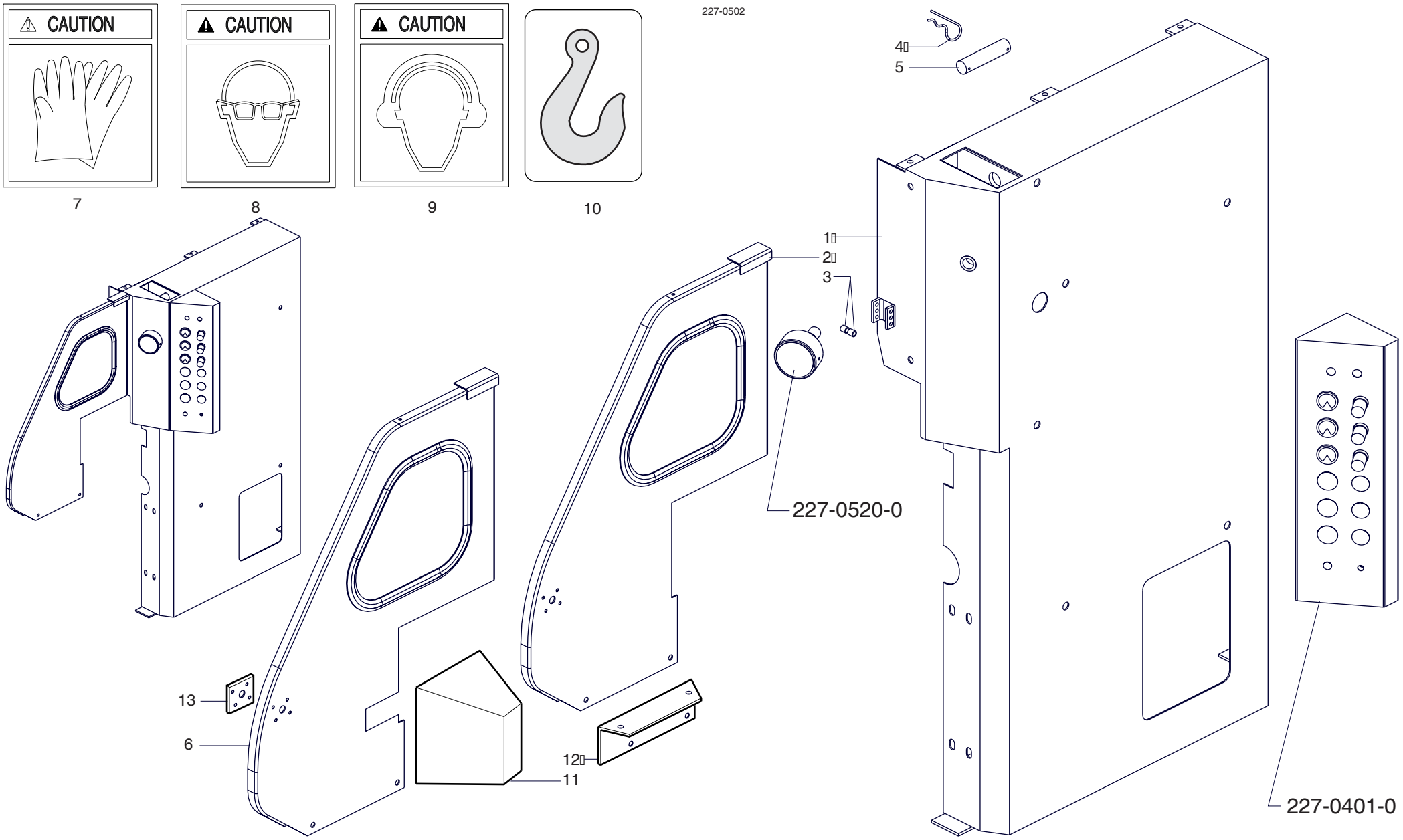


| | | | |
|---|---|---|---|
| scm | SUPERSET XL | CABINA ANTIRUMORE - (01.01.1901 -> 23.01.2002 - p.20,06,2007)<br>SOUNDPROOF BOOTH - CABINE INSONORISANTE<br>SCHALLSCHUTZKABINE - CABINA ANTI-RUIDOS | 227-0502-0 |

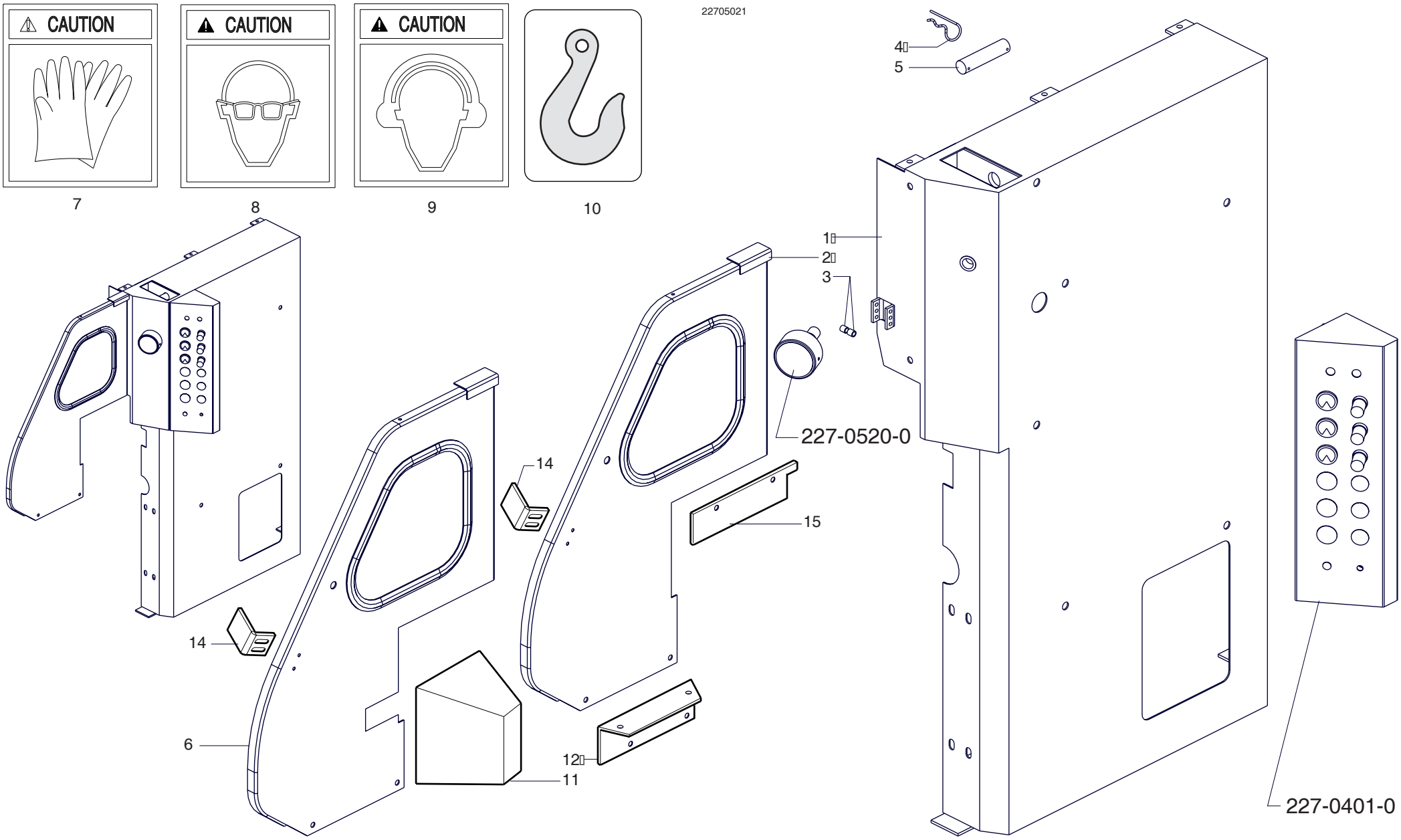


| | | | |
|---|---|---|---|
| scm | SUPERSET XL | CABINA ANTIRUMORE - (24.01.2002 -> - p.20,06,2007)<br>SOUNDPROOF BOOTH - CABINE INSONORISANTE<br>SCHALLSCHUTZKABINE - CABINA ANTI-RUIDOS | 227-0502-0 |

| scm | SUPERSET XL | CABINA ANTIRUMORE - (p.20,06,2007)<br>SOUNDPROOF BOOTH - CABINE INSONORISANTE<br>SCHALLSCHUTZKABINE - CABINA ANTI-RUIDOS | 227-0503-0 |
|---|---|---|---|

| N | P | C | CODICE | Q.TY | DENOMINAZIONE | DESCRIPTION | DESIGNATION | BEZEICHNUNG | DENOMINACION |
|---|---|---|---|---|---|---|---|---|---|
| | 01.01.1901 -> 01.01.3000 | | | | Note: 2822770012E | | | | |
| | 1 | | 0322770204L | 1.00 | RIGHETTA | RULE | REGLETTE | SCHIENE | REGLA |
| | 2 | | 0322770208H | 2.00 | PROTEZIONE TRASPARENTE | GUARD | PROTECTION | ABDECKUNG | PROTECCION TRANSPARENTE |
| | 2 | | 0322770209A | 1.00 | PROTEZIONE TRASPARENTE | GUARD | PROTECTION | ABDECKUNG | PROTECCION TRANSPARENTE |
| | 3 | | 2722770206E | 1.00 | SPONDA | SIDE | BORDE | WAND | COMPUERTA |
| | 4 | | 0321940456G | 2.00 | DISTANZIALE | SPACER | ENTRETOISE | DISTANZSTUECK | DISTANCIADOR |
| | 5 | | 0522770212A | 1.00 | SPALLA SX | SIDE | FLANC | SEITE | ESPALDAR |
| | 5 | | 0522770521F | 1.00 | SPALLA SX PER H=180 | SIDE | FLANC | SEITE | ESPALDAR |
| | 6 | | 0000646025E | 2.00 | COPIGLIA | SPLIT PIN | GOUPILLE | SPLINT | BLOQUEO |
| | 7 | | 0322770113F | 1.00 | PERNO | PIN | PIVOT | BOLZEN | PERNO |
| | 8 | | 0302110195G | 1.00 | TARGHETTA | RATING PLATE | PLAQUETTE | SCHILD | TARJETA |
| | 9 | | 0522770522H | 1.00 | CHIUSURA | COVER | PIECE DE FERMETURE | DECKEL | CIERRE |
| | 10 | | 0322770216E | 1.00 | TUNNEL | TUNNEL | TUNNEL | TUNNEL | TUNEL |

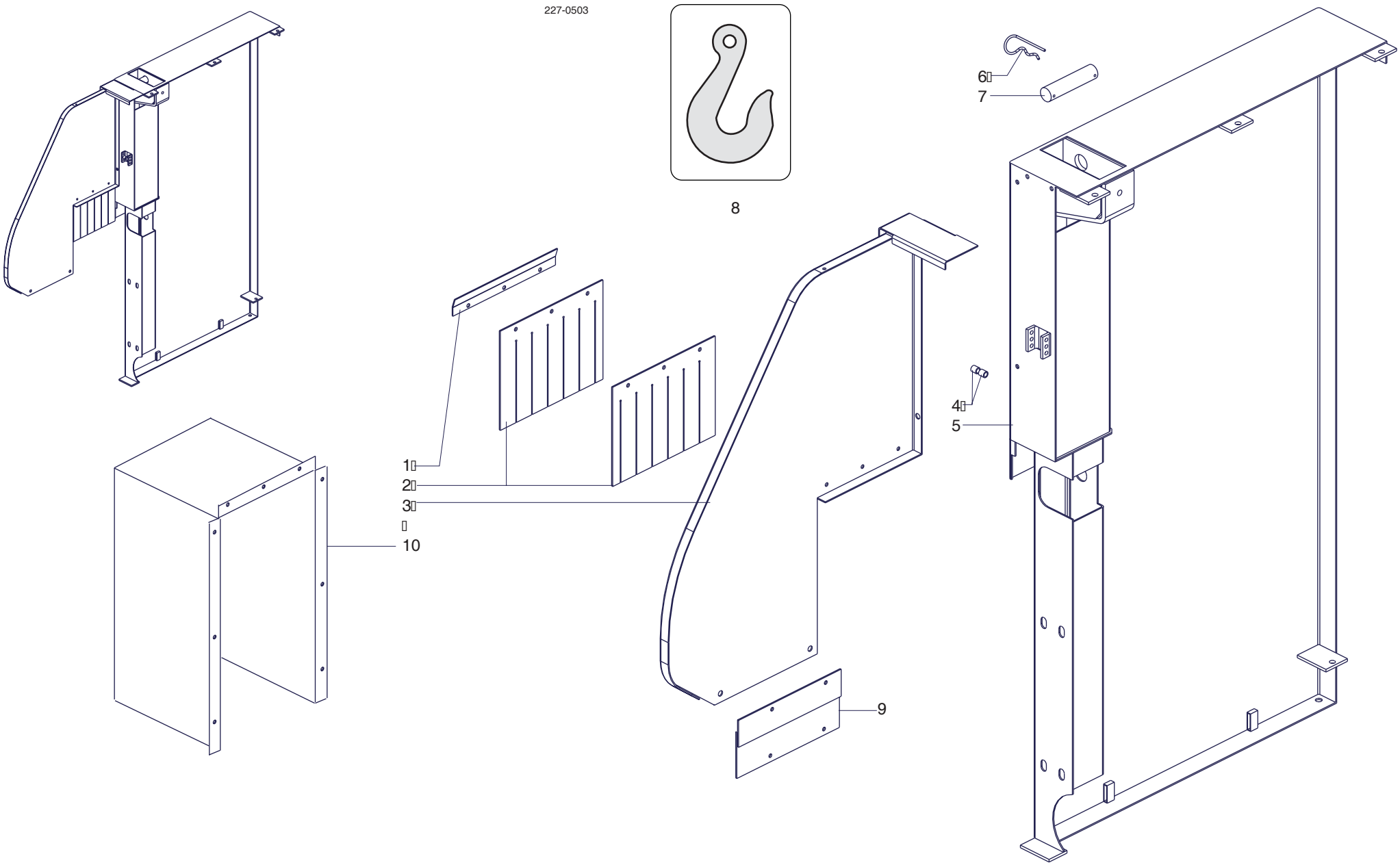


| | | | |
|---|---|---|---|
| scm | SUPERSET XL | CABINA ANTIRUMORE - (01.01.1901 -> - p.20,06,2007)<br>SOUNDPROOF BOOTH - CABINE INSONORISANTE<br>SCHALLSCHUTZKABINE - CABINA ANTI-RUIDOS | 227-0503-0 |

| scm | SUPERSET XL | CABINA ANTIRUMORE - (p.20,06,2007)<br>SOUNDPROOF BOOTH - CABINE INSONORISANTE<br>SCHALLSCHUTZKABINE - CABINA ANTI-RUIDOS | 227-0504-0 |
|---|---|---|---|

| N | P | C | CODICE | Q.TY | DENOMINAZIONE | DESCRIPTION | DESIGNATION | BEZEICHNUNG | DENOMINACION |
|---|---|---|---|---|---|---|---|---|---|
| | 01.01.1901 -> 01.01.3000 | | | | Note: 2822770013G | | | | |
| | 1 | | 0001306100D | 2.00 | PLAFONIERA | ROOF LAMP | PLAFONNIER | DECKENLAMPE | PORTA LAMPARA |
| | 2 | | 0522770311A | 1.00 | TRAVERSA | CROSS MEMBER | TRAVERSE | QUERBALKEN | PUENTE |
| | 3 | | 0522770402D | 2.00 | SPORTELLO | DOOR | VOLET | TUER | VENTANILLA |
| | 3 | | 0522770405A | 1.00 | SPORTELLO HP30 | DOOR | VOLET | TUER | VENTANILLA |
| | 3 | | 2922770402E | 2.00 | GR. SPORTELLO | DOOR | VOLET | TUER | VENTANILLA |
| | 4 | | 0321940456G | 4.00 | DISTANZIALE | SPACER | ENTRETOISE | DISTANZSTUECK | DISTANCIADOR |
| | 5 | | 0000610062L | 2.00 | MOLLA PNE. | PNEUMATIC SPRING | RESSORT | PNEUM.FEDER | RES.NEUM. |
| | 6 | | 0539014209E | 1.00 | SUPPORTO | SUPPORT | SUPPORT | STUETZE | SOPORTE |
| | 7 | | 0001308766L | 1.00 | FINECORSA | LIMIT SWITCH | FIN DE COURSE | ENDSCHALTER | FIN CARRERA |
| | 8 | | 0339014208H | 1.00 | PIASTRA | PLATE | PLAQUE | PLATTE | PLANCHA |
| | 9 | | 0322770412A | 1.00 | CARTER | COVER | CARTER | DECKEL | CARTER |
| | 10 | | 2722770301F | 1.00 | COPERTURA | COVER | COUVERCLE | DECKEL | CUBIERTA |
| | 11 | | 0302110050L | 1.00 | TARGA | PLATE | PLAQUE | SCHILD | TARJETA |
| | 12 | | 0302110075C | 1.00 | TARGA | PLATE | PLAQUE | SCHILD | TARJETA |
| | 13 | | 0725414714E | 1.00 | ELETTROMAGNETE | ELECTROMAGNET | ELECTROAIMANT | ELEKTROMAGNET | ELECTROM. |
| | 14 | | 0321940493E | 1.00 | DISCO | DISC | DISQUE | SCHEIBE | DISCO |
| | 15 | | 0322770304B | 1.00 | SUPPORTO | SUPPORT | SUPPORT | STUETZE | SOPORTE |
| | 16 | | 0000626058A | 1.00 | CHIAVE | WRENCH | CLEF | SCHLUESSEL | LLAVE |
| | 17 | | 0722770415F | 2.00 | CHIUSURA | COVER | PIECE DE FERMETURE | DECKEL | CIERRE |

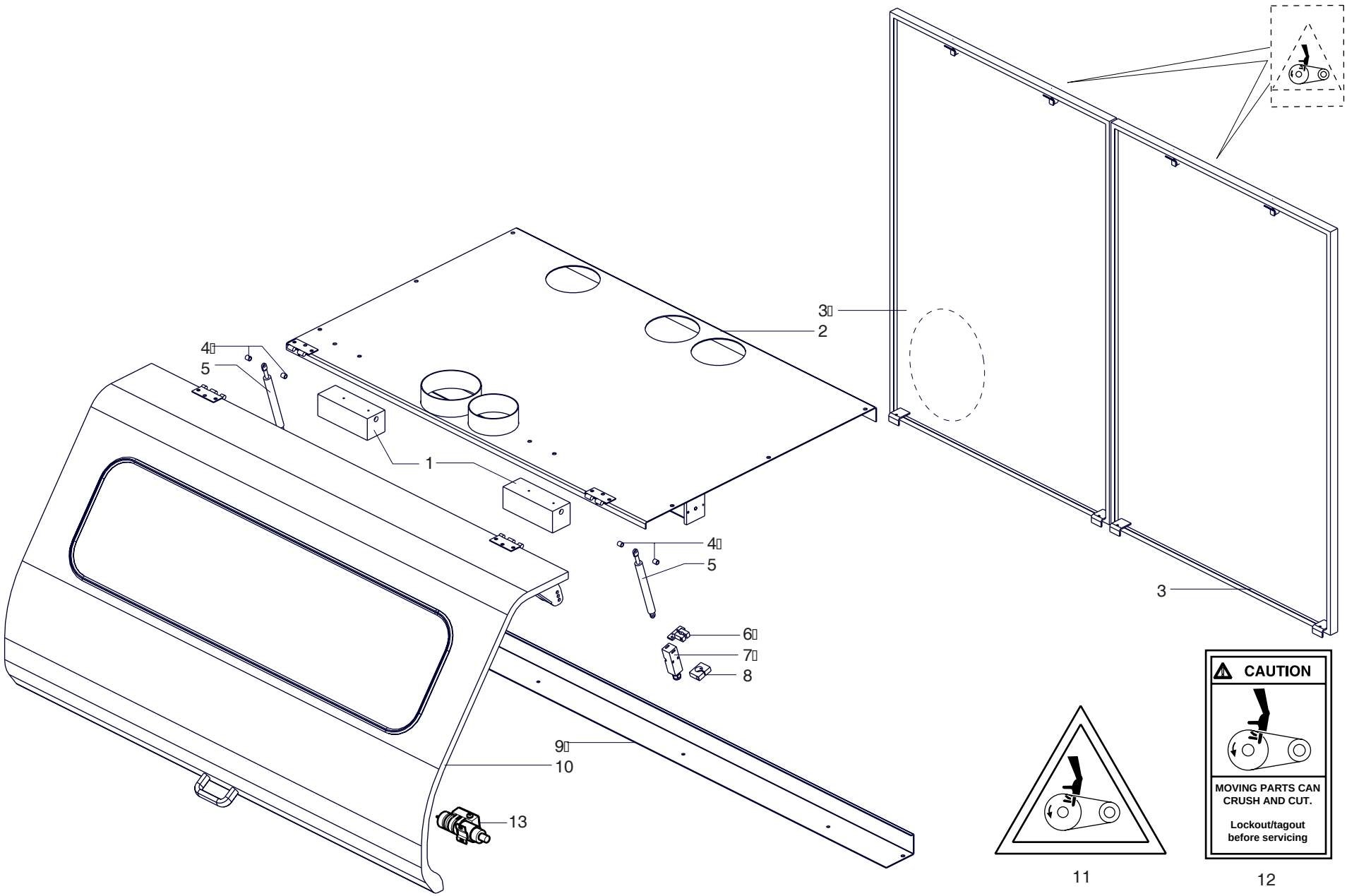




11




12

| | | | |
|---|---|---|---|
| scm | **SUPERSET XL** | **CABINA ANTIRUMORE - (01.01.1901 -> 23.01.2002 - p.20,06,2007)**<br>**SOUNDPROOF BOOTH - CABINE INSONORISANTE**<br>**SCHALLSCHUTZKABINE - CABINA ANTI-RUIDOS** | **227-0504-0** |

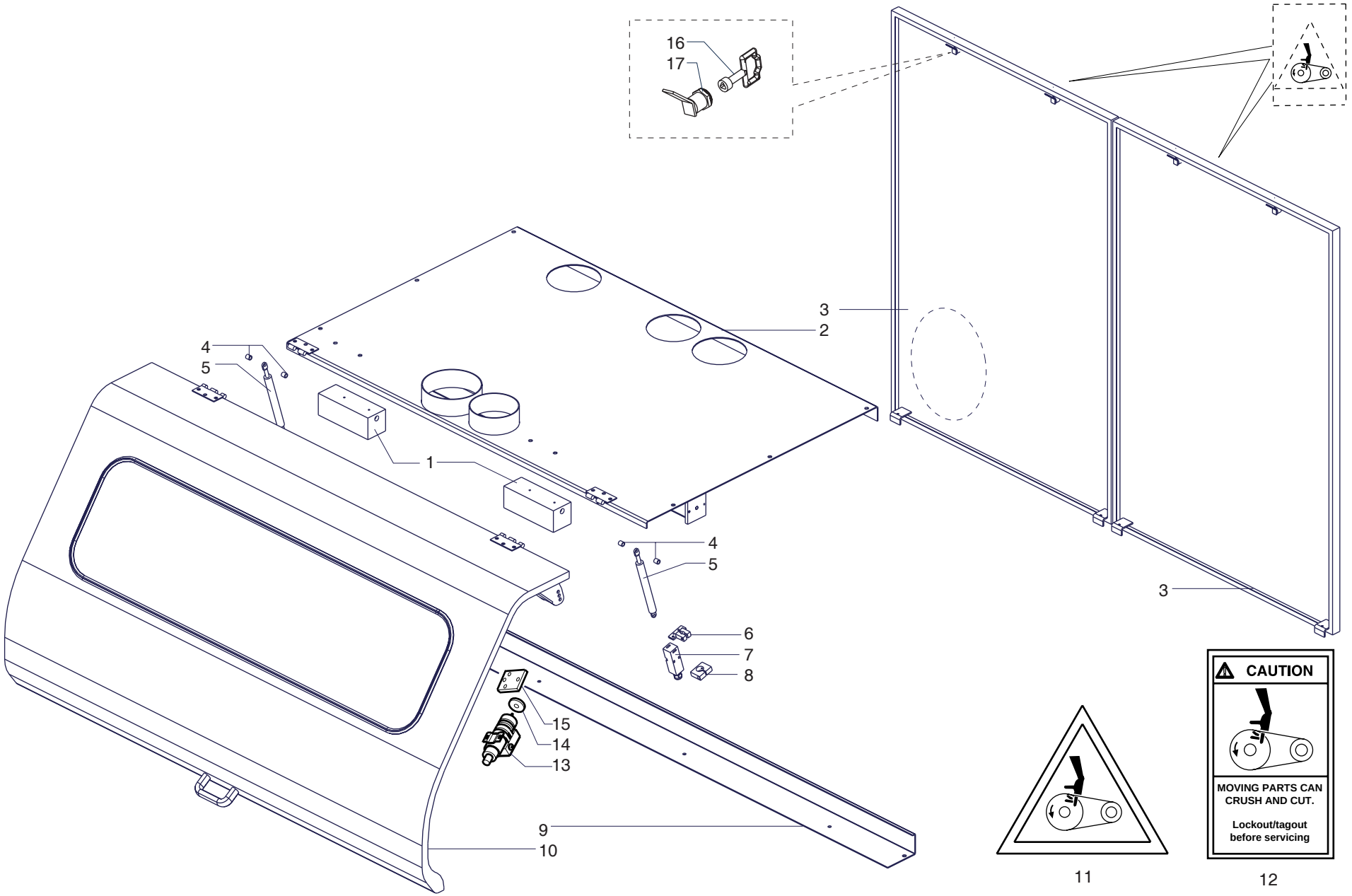


11

12

| | | | |
|---|---|---|---|
| scm | SUPERSET XL | CABINA ANTIRUMORE - (24.01.2002 ->  - p.20,06,2007)<br>SOUNDPROOF BOOTH - CABINE INSONORISANTE<br>SCHALLSCHUTZKABINE - CABINA ANTI-RUIDOS | 227-0504-0 |

| scm | SUPERSET XL | CABINA ANTIRUMORE - (p.20,06,2007)<br>SOUNDPROOF BOOTH - CABINE INSONORISANTE<br>SCHALLSCHUTZKABINE - CABINA ANTI-RUIDOS | 227-0504-5 |
|---|---|---|---|

| N | P | C | CODICE | Q.TY | DENOMINAZIONE | DESCRIPTION | DESIGNATION | BEZEICHNUNG | DENOMINACION |
|---|---|---|---|---|---|---|---|---|---|
| | 01.01.1901 -> 01.01.3000 | | | | Note: 2822770013G | | | | |
| | 1 | | 0001306100D | 2.00 | PLAFONIERA | ROOF LAMP | PLAFONNIER | DECKENLAMPE | PORTA LAMPARA |
| | 2 | | 0522770312C | 1.00 | TRAVERSA | CROSS MEMBER | TRAVERSE | QUERBALKEN | PUENTE |
| | 3 | | 0522770406C | 2.00 | SPORTELLO | DOOR | VOLET | TUER | VENTANILLA |
| | 3 | | 2922770406D | 1.00 | GR. SPORTELLO | DOOR | VOLET | TUER | VENTANILLA |
| | 4 | | 0321940456G | 4.00 | DISTANZIALE | SPACER | ENTRETOISE | DISTANZSTUECK | DISTANCIADOR |
| | 5 | | 0000610062L | 2.00 | MOLLA PNE. | PNEUMATIC SPRING | RESSORT | PNEUM.FEDER | RES.NEUM. |
| | 5 | | 0000610081L | 2.00 | MOLLA PNE. | PNEUMATIC SPRING | RESSORT | PNEUM.FEDER | RESORTE NEUM. |
| | 6 | | 0539014209E | 1.00 | SUPPORTO | SUPPORT | SUPPORT | STUETZE | SOPORTE |
| | 7 | | 0001308766L | 1.00 | FINECORSA | LIMIT SWITCH | FIN DE COURSE | ENDSCHALTER | FIN CARRERA |
| | 8 | | 0322770221E | 1.00 | PIASTR | PLATE | PLAQUE | PLATTE | PLANCHA |
| | 8 | | 0339014208H | 1.00 | PIASTRA | PLATE | PLAQUE | PLATTE | PLANCHA |
| | 9 | | 0322770414E | 1.00 | ANGOLARE | SQUARE SUPPORT | CORNIERE | WINKELSUPPORT | ESQUINERO |
| | 10 | | 2722770330G | 1.00 | COPERTURA | COVER | COUVERCLE | DECKEL | CUBIERTA |
| | 11 | | 0302110050L | 1.00 | TARGA | PLATE | PLAQUE | SCHILD | TARJETA |
| | 13 | | 0725414714E | 1.00 | ELETTROMAGNETE | ELECTROMAGNET | ELECTROAIMANT | ELEKTROMAGNET | ELECTROM. |
| | 14 | | 0321940493E | 1.00 | DISCO | DISC | DISQUE | SCHEIBE | DISCO |
| | 15 | | 0322770304B | 1.00 | SUPPORTO | SUPPORT | SUPPORT | STUETZE | SOPORTE |
| | 16 | | 0000626058A | 1.00 | CHIAVE | WRENCH | CLEF | SCHLUESSEL | LLAVE |
| | 17 | | 0722770415F | 2.00 | CHIUSURA | COVER | PIECE DE FERMETURE | DECKEL | CIERRE |

22705045

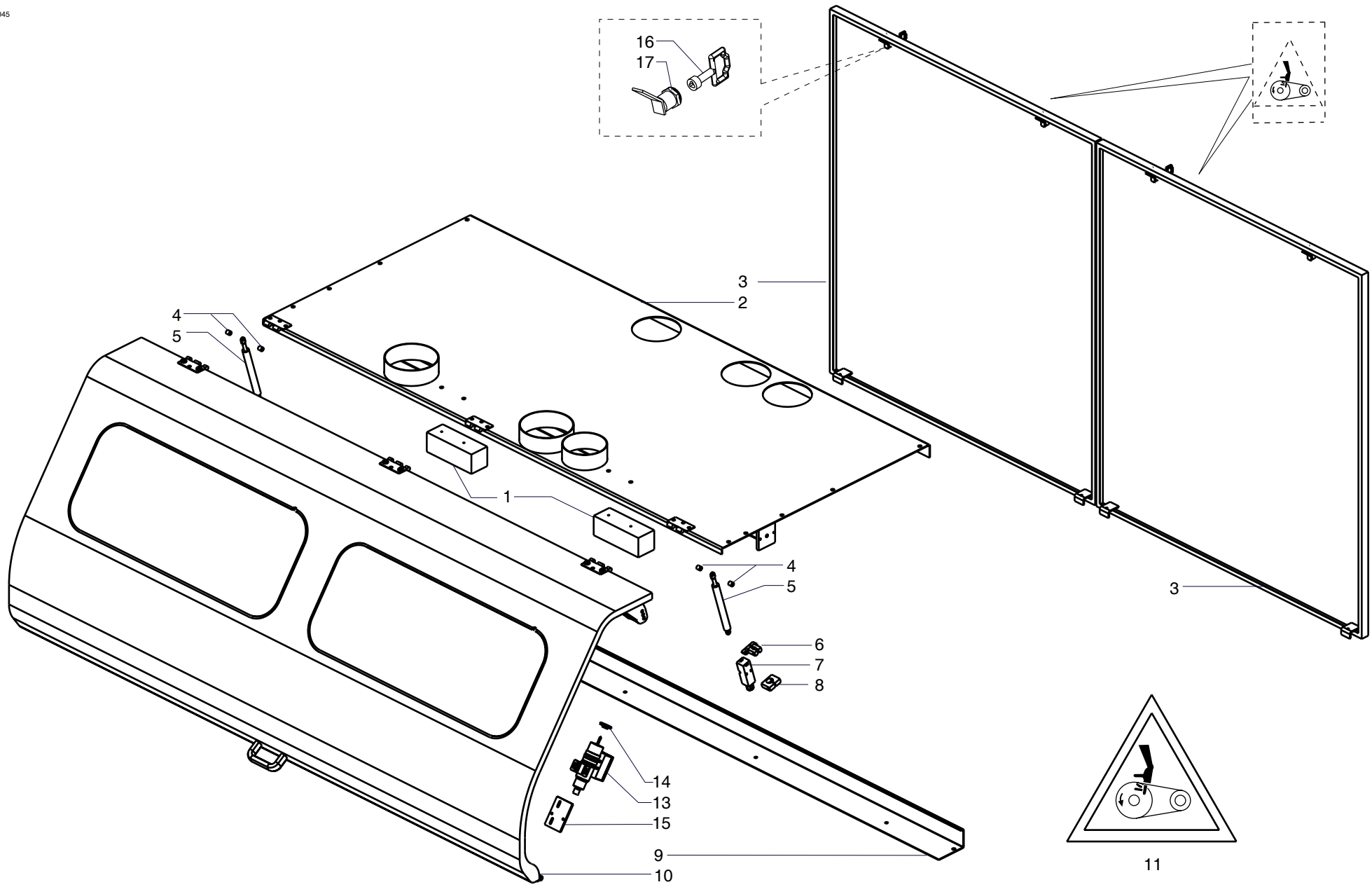


| | | | |
|---|---|---|---|
| scm | SUPERSET XL | CABINA ANTIRUMORE - (01.01.1901 -> - p.20,06,2007)<br>SOUNDPROOF BOOTH - CABINE INSONORISANTE<br>SCHALLSCHUTZKABINE - CABINA ANTI-RUIDOS | 227-0504-5 |

| scm | SUPERSET XL | CABINA ANTIRUMORE - (p.20,06,2007)<br>SOUNDPROOF BOOTH - CABINE INSONORISANTE<br>SCHALLSCHUTZKABINE - CABINA ANTI-RUIDOS | 227-0505-0 |
|---|---|---|---|

| N | P | C | CODICE | Q.TY | DENOMINAZIONE | DESCRIPTION | DESIGNATION | BEZEICHNUNG | DENOMINACION |
|---|---|---|---|---|---|---|---|---|---|
| | 01.01.1901 -> 01.01.3000 | | | | Note: 2822770220F | | | | |
| | 1 | | 0322770204L | 1.00 | RIGHETTA | RULE | REGLETTE | SCHIENE | REGLA |
| | 2 | | 0322770208H | 2.00 | PROTEZIONE TRASPARENTE | GUARD | PROTECTION | ABDECKUNG | PROTECCION TRANSPARENTE |
| | 2 | | 0322770209A | 2.00 | PROTEZIONE TRASPARENTE | GUARD | PROTECTION | ABDECKUNG | PROTECCION TRANSPARENTE |
| | 3 | | 0321940456G | 2.00 | DISTANZIALE | SPACER | ENTRETOISE | DISTANZSTUECK | DISTANCIADOR |
| | 4 | | 2722770206E | 1.00 | SPONDA | SIDE | BORDE | WAND | COMPUERTA |
| | 5 | | 0522770215G | 1.00 | SPALLA | SIDE | FLANC | SEITE | ESPALDAR |
| | 5 | | 0522770219F | 1.00 | SPALLA | SIDE | FLANC | SEITE | ESPALDAR |
| | 5 | | 0522770561A | 1.00 | SPALLA | SIDE | FLANC | SEITE | ESPALDAR |
| | 6 | | 0522770522H | 1.00 | CHIUSURA | COVER | PIECE DE FERMETURE | DECKEL | CIERRE |

227-0505

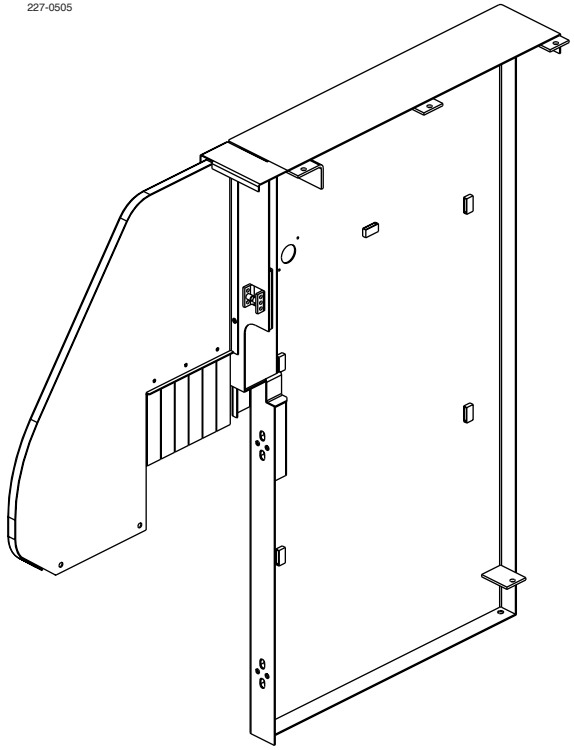

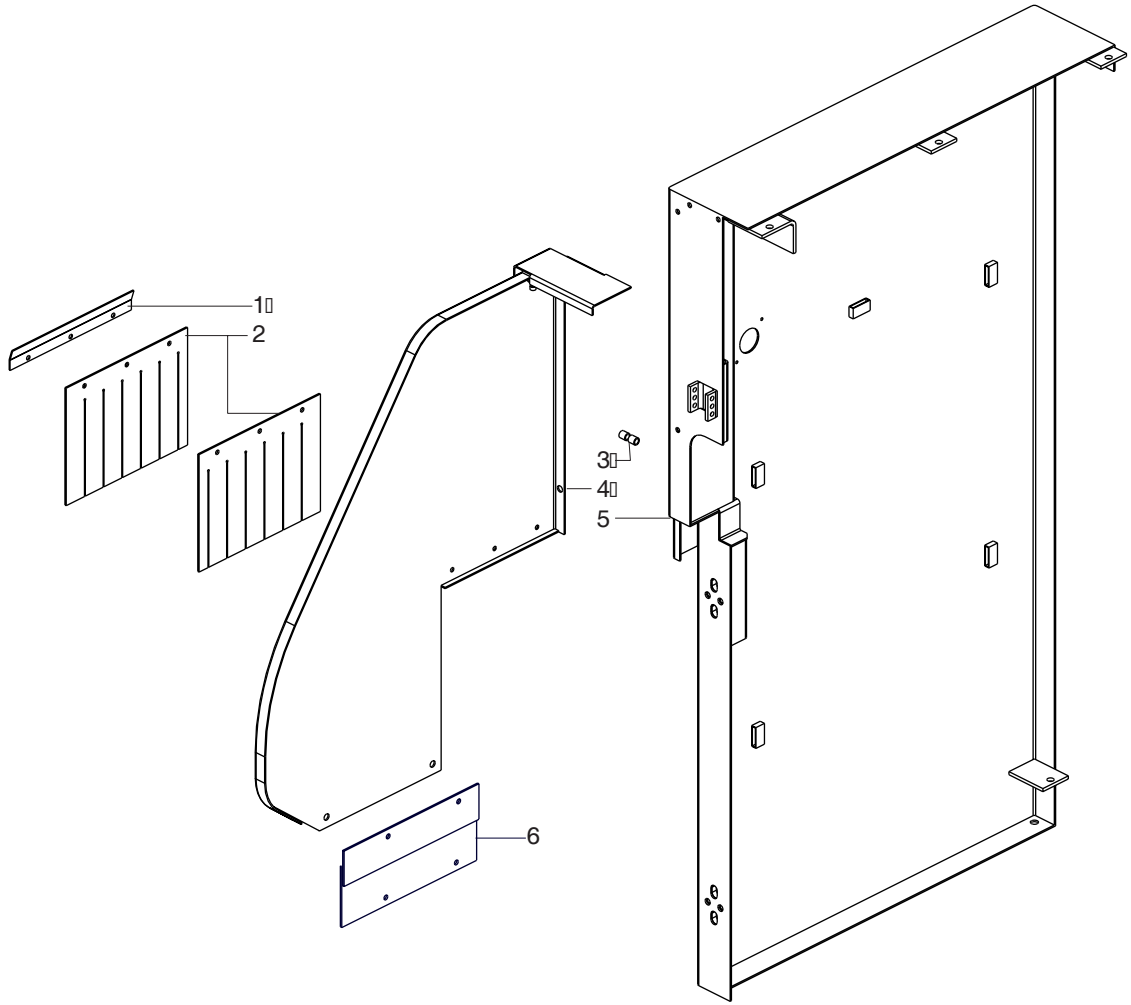


| | | | |
|---|---|---|---|
| scm | SUPERSET XL | CABINA ANTIRUMORE - (01.01.1901 ->  - p.20,06,2007)<br>SOUNDPROOF BOOTH - CABINE INSONORISANTE<br>SCHALLSCHUTZKABINE - CABINA ANTI-RUIDOS | 227-0505-0 |

| scm | SUPERSET XL | CABINA ANTIRUMORE - (p.20,06,2007)<br>SOUNDPROOF BOOTH - CABINE INSONORISANTE<br>SCHALLSCHUTZKABINE - CABINA ANTI-RUIDOS | 227-0506-0 |
|---|---|---|---|

| N | P | C | CODICE | Q.TY | DENOMINAZIONE | DESCRIPTION | DESIGNATION | BEZEICHNUNG | DENOMINACION |
|---|---|---|---|---|---|---|---|---|---|
| | 01.01.1901 -> 01.01.3000 | | | | Note: 2822770320H | | | | |
| | 1 | | 2722770321H | 1.00 | PORTELLONE | DOOR | PORTE | TUER | PORTILLO |
| | 2 | | 0522770214E | 1.00 | TRAVERSA | CROSS MEMBER | TRAVERSE | QUERBALKEN | PUENTE |
| | 3 | | 0001306100D | 3.00 | PLAFONIERA | ROOF LAMP | PLAFONNIER | DECKENLAMPE | PORTA LAMPARA |
| | 4 | | 0522770404H | 1.00 | SPORTELLO | DOOR | VOLET | TUER | VENTANILLA |
| | 4 | | 2922770404L | 1.00 | GR. SPORTELLO UNIV. | DOOR | VOLET | TUER | VENTANILLA |
| | 5 | | 0522770402D | 1.00 | SPORTELLO | DOOR | VOLET | TUER | VENTANILLA |
| | 5 | | 0522770405A | 1.00 | SPORTELLO HP30 | DOOR | VOLET | TUER | VENTANILLA |
| | 5 | | 2922770402E | 1.00 | GR. SPORTELLO | DOOR | VOLET | TUER | VENTANILLA |
| | 5 | | 2922770405B | 1.00 | SPORTELLO HP30 | DOOR | VOLET | TUER | VENTANILLA |
| | 6 | | 0522770402D | 1.00 | SPORTELLO | DOOR | VOLET | TUER | VENTANILLA |
| | 7 | | 0321940456G | 6.00 | DISTANZIALE | SPACER | ENTRETOISE | DISTANZSTUECK | DISTANCIADOR |
| | 8 | | 0000610062L | 3.00 | MOLLA PNE. | PNEUMATIC SPRING | RESSORT | PNEUM.FEDER | RES.NEUM. |
| | 10 | | 0339014208H | 1.00 | PIASTRA | PLATE | PLAQUE | PLATTE | PLANCHA |
| | 11 | | 0539014209E | 1.00 | SUPPORTO | SUPPORT | SUPPORT | STUETZE | SOPORTE |
| | 12 | | 0322770413C | 1.00 | TRAVERSA | CROSS MEMBER | TRAVERSE | QUERBALKEN | PUENTE |
| | 13 | | 0302110050L | 3.00 | TARGA | PLATE | PLAQUE | SCHILD | TARJETA |
| | 14 | | 0302110075C | 3.00 | TARGA | PLATE | PLAQUE | SCHILD | TARJETA |
| | 15 | | 0725414714E | 1.00 | ELETTROMAGNETE | ELECTROMAGNET | ELECTROAIMANT | ELEKTROMAGNET | ELECTROM. |
| | 16 | | 0321940493E | 1.00 | DISCO | DISC | DISQUE | SCHEIBE | DISCO |
| | 17 | | 0322770304B | 1.00 | SUPPORTO | SUPPORT | SUPPORT | STUETZE | SOPORTE |

227-0506

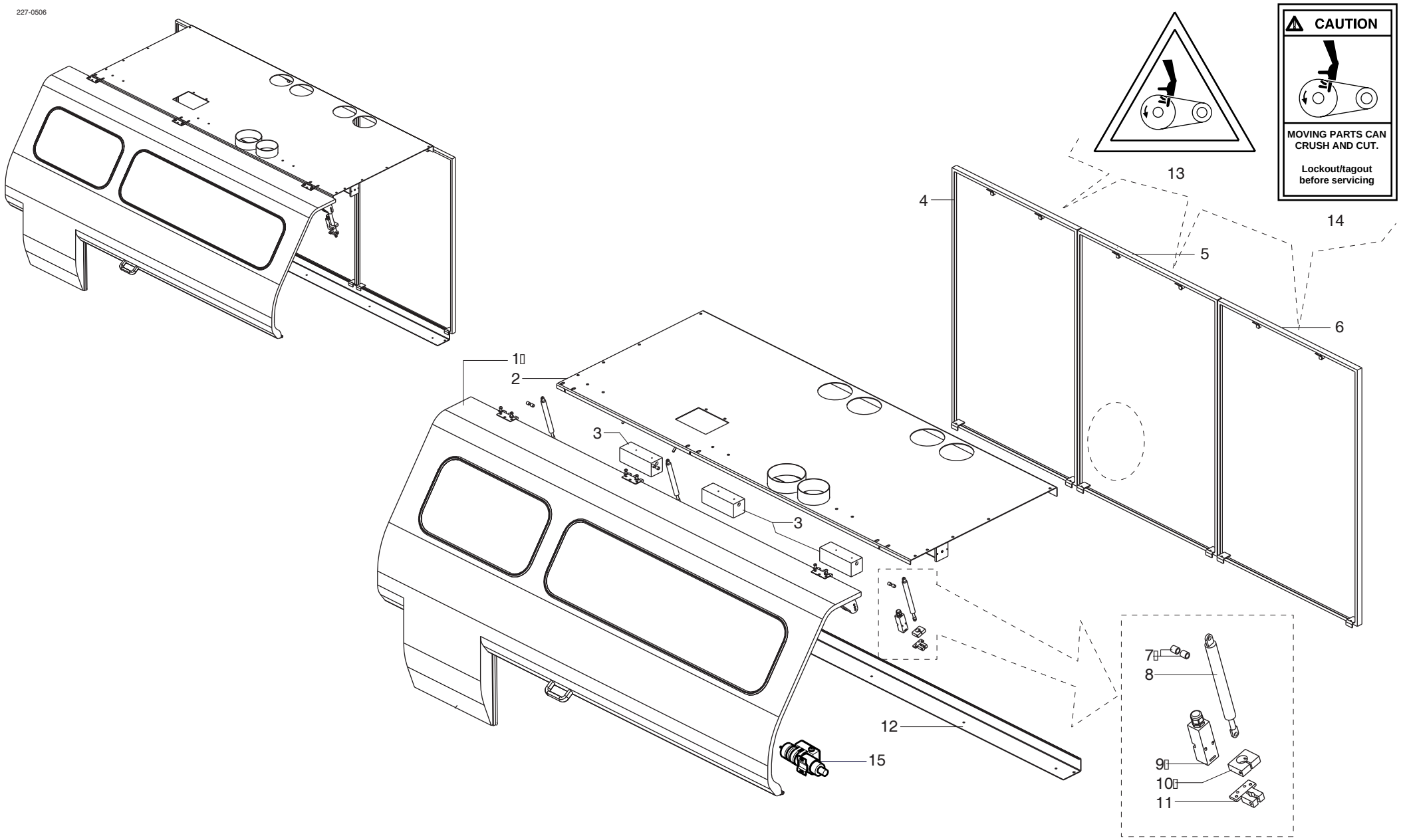


| | | | |
|---|---|---|---|
| scm | SUPERSET XL | CABINA ANTIRUMORE - (01.01.1901 -> 23.01.2002 - p.20,06,2007)<br>SOUNDPROOF BOOTH - CABINE INSONORISANTE<br>SCHALLSCHUTZKABINE - CABINA ANTI-RUIDOS | 227-0506-0 |

227-0506

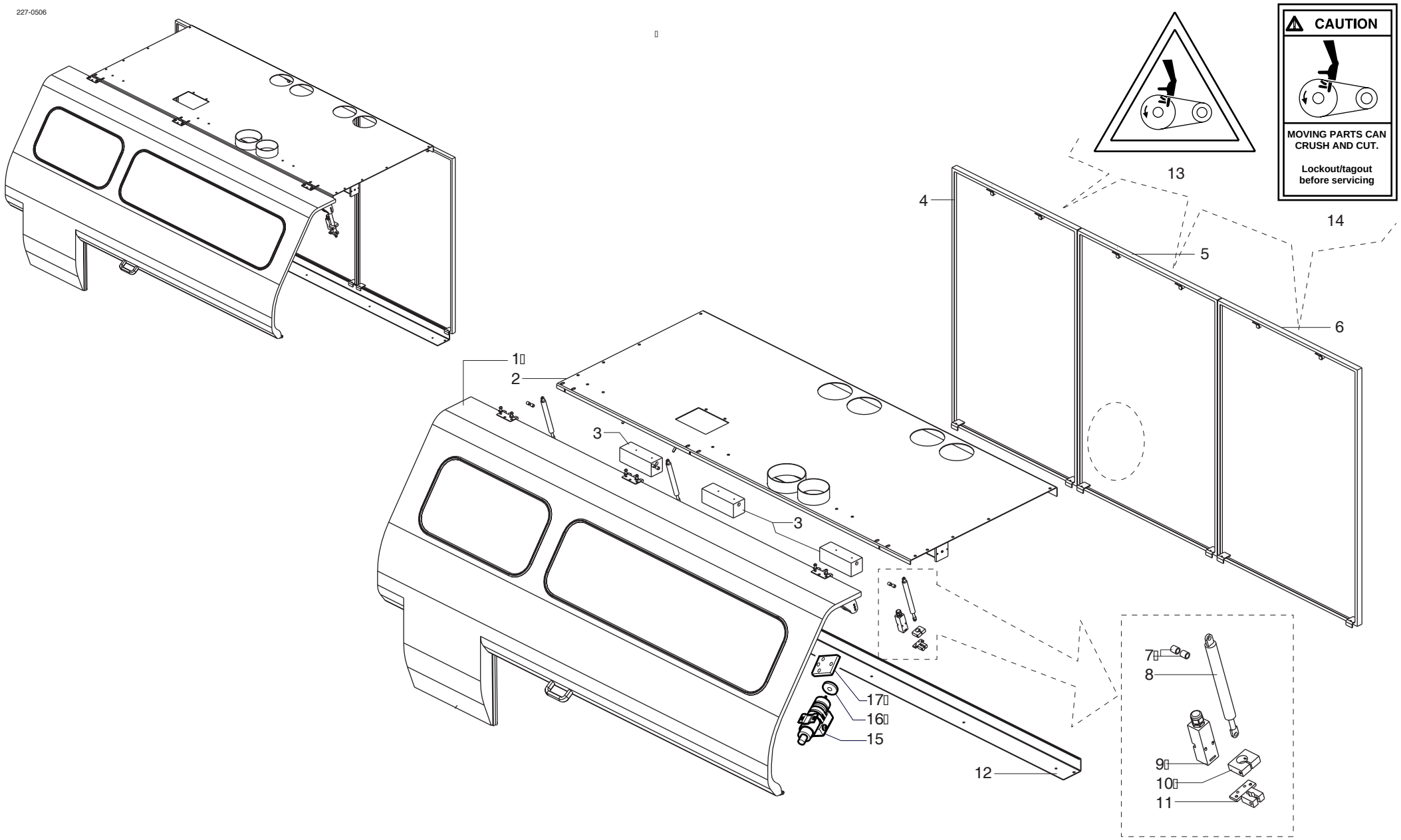


| | | | |
|---|---|---|---|
| scm | SUPERSET XL | CABINA ANTIRUMORE - (24.01.2002 ->  - p.20,06,2007)<br>SOUNDPROOF BOOTH - CABINE INSONORISANTE<br>SCHALLSCHUTZKABINE - CABINA ANTI-RUIDOS | 227-0506-0 |

| scm | SUPERSET XL | COLONNA - (p.20,06,2007)<br>COLUMN - MONTANT<br>SAEULE - COLUMNA | 227-0507-0 |
|---|---|---|---|

| N | P | C | CODICE | Q.TY | DENOMINAZIONE | DESCRIPTION | DESIGNATION | BEZEICHNUNG | DENOMINACION |
|---|---|---|---|---|---|---|---|---|---|
| | 01.01.1901 -> 01.01.3000 | | | | Note: 2822770340A | | | | |
| 1 | | | 0000646025E | 2.00 | COPIGLIA | SPLIT PIN | GOUPILLE | SPLINT | BLOQUEO |
| 2 | | | 0322770113F | 1.00 | PERNO | PIN | PIVOT | BOLZEN | PERNO |
| 3 | | | 0522770213C | 1.00 | COLONNA | COLUMN | COLONNE | STAENDER | COLUMNA |
| 3 | | | 0522770571B | 1.00 | COLONNA | COLUMN | COLONNE | STAENDER | COLUMNA |
| 4 | | | 0321940456G | 2.00 | DISTANZIALE | SPACER | ENTRETOISE | DISTANZSTUECK | DISTANCIADOR |
| 5 | | | 0302110195G | 1.00 | TARGHETTA | RATING PLATE | PLAQUETTE | SCHILD | TARJETA |

227-0507

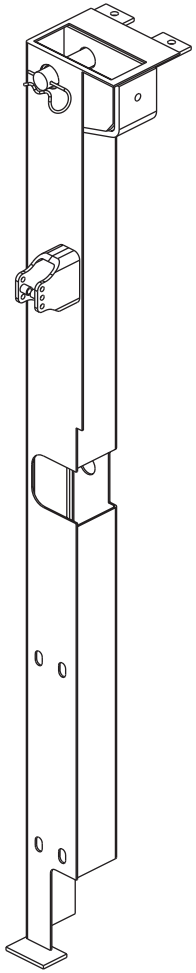

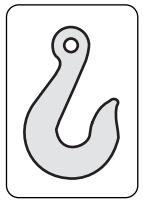

5

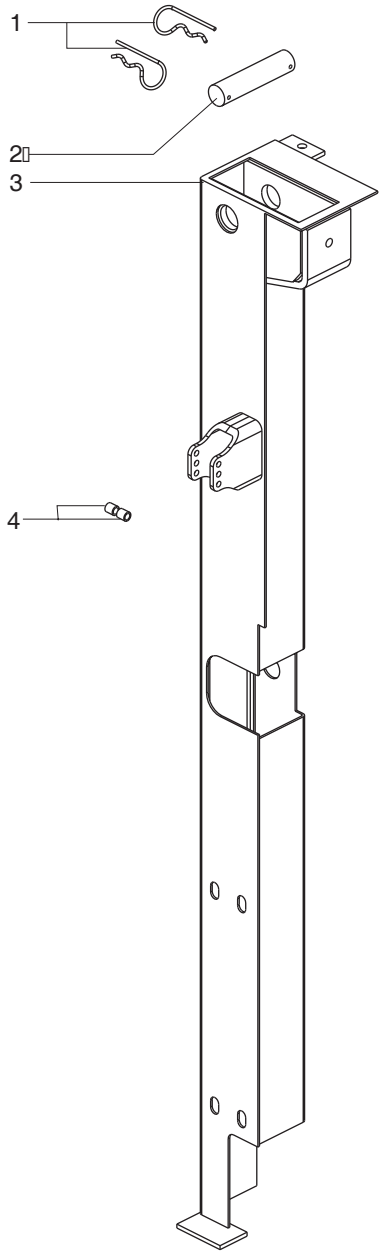


| | | | |
|---|---|---|---|
| scm | **SUPERSET XL** | **COLONNA - (01.01.1901 -> - p.20,06,2007)**<br>**COLUMN - MONTANT**<br>**SAEULE - COLUMNA** | **227-0507-0** |

| scm | SUPERSET XL | INDICATORE GRAVITAZIONALE - (p.20,06,2007)<br>GRAVITIONAL INDICATOR - INDICATEUR GRAVITATTONEL<br>SCHWEREZEIGER - INDICADOR GRAVITACIONAL | 227-0520-0 |
|---|---|---|---|

| N | P | C | CODICE | Q.TY | DENOMINAZIONE | DESCRIPTION | DESIGNATION | BEZEICHNUNG | DENOMINACION |
|---|---|---|---|---|---|---|---|---|---|
| | 01.01.1901 -> 01.01.3000 | | | | Note: 2822740145A | | | | |
| 1 | | | 0722740139D | 1.00 | INDICATORE | INDICATOR | INDICATEUR | ANZEIGER | INDICADOR |
| 1 | | | 0722740149E | 1.00 | INDICATORE | INDICATOR | INDICATEUR | ANZEIGER | INDICADOR |
| 2 | | | 0000613045G | 2.00 | RALLA | WASHER | CRAPAUDINE | SCHEIBE | RANGUA |
| 3 | | | 0000601013E | 1.00 | BOCCOLA | BUSHING | DOUILLE | BUCHSE | CASQUILLO |
| 4 | | | 0322740140F | 1.00 | PERNO | PIN | PIVOT | BOLZEN | PERNO |
| 5 | | | 0000644268H | 1.00 | ANELLO SEEGER | CIRCLIP | CIRCLIP | SEEGERRING | SEEGER |
| 6 | | | 0722740132H | 1.00 | GIUNTO | JOINT | JOINT | KUPPLUNG | JUNTA |

227-0520

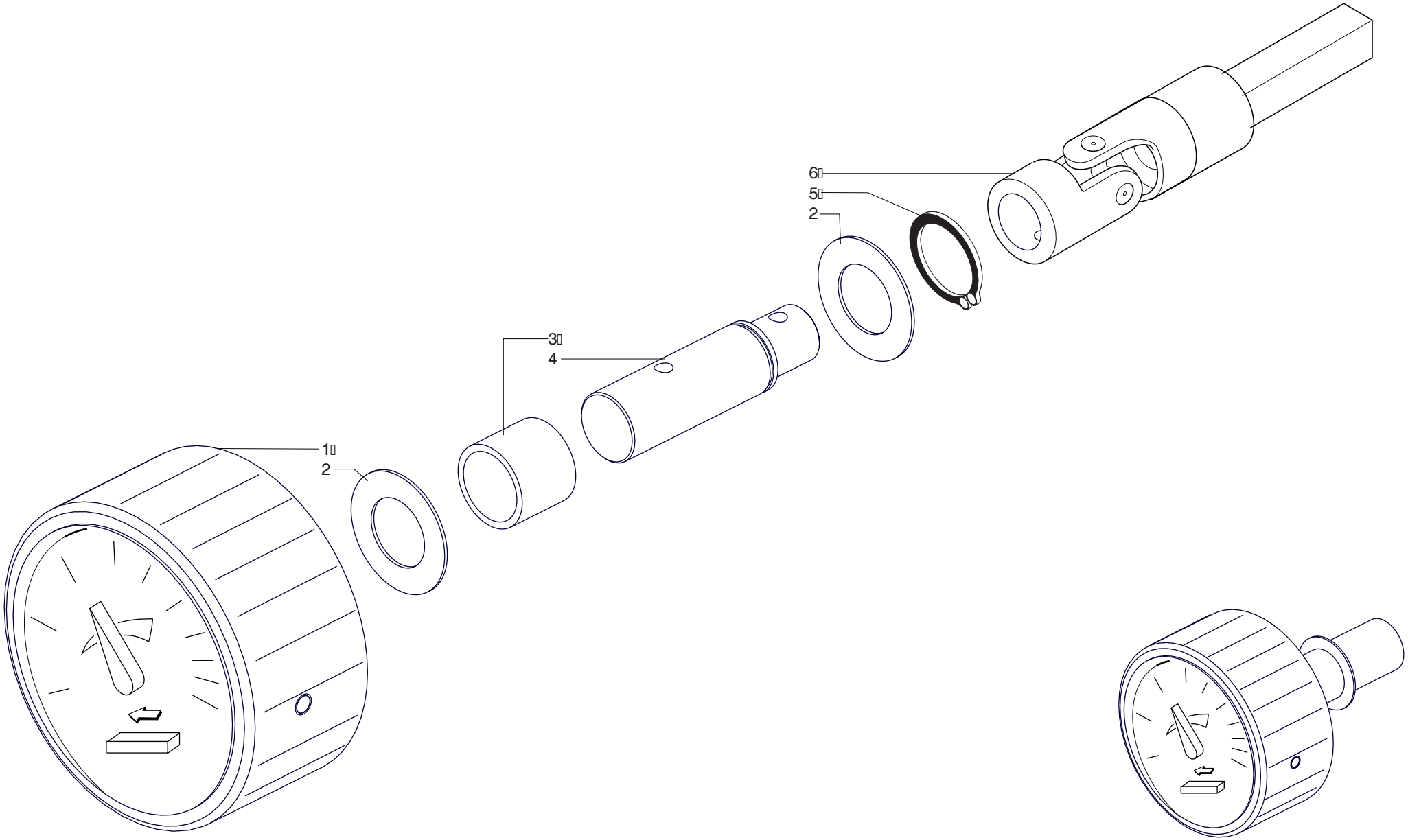


| | | | |
|---|---|---|---|
| scm | SUPERSET XL | INDICATORE GRAVITAZIONALE - (01.01.1901 -> - p.20,06,2007)<br>GRAVITIONAL INDICATOR - INDICATEUR GRAVITATTONEL<br>SCHWEREZEIGER - INDICADOR GRAVITACIONAL | 227-0520-0 |

| scm | SUPERSET XL | GUIDA IN ENTRATA A PARALLELOGRAMMA - (p.20,06,2007)<br>PARALLELOGRAM INFEED FENCE - GUIDE ENTREE A PARALLELOGRAMME<br>PARALLELOGRAMM - FUEGELINEAL - GUIA ENTRADA A PARALELOGRAMA | 227-0601-0 |
|---|---|---|---|

| N | P | C | CODICE | Q.TY | DENOMINAZIONE | DESCRIPTION | DESIGNATION | BEZEICHNUNG | DENOMINACION |
|---|---|---|---|---|---|---|---|---|---|
| | 01.01.1901 -> 01.01.3000 | | | | Note: 2822760080F | | | | |
| | 1 | | 0316023800F | 1.00 | POMELLO | BALL GRIP | GRIFFE | KUGELGRIFF | POMO |
| | 2 | | 0316023700D | 1.00 | PIASTRA | PLATE | PLAQUE | PLATTE | PLANCHA |
| | 3 | | 0310170019E | 1.00 | LEVA | LEVER | LEVIER | HEBEL | PALANCA |
| | 4 | | 0319450175D | 1.00 | MOLLA | SPRING | RESSORT | FEDER | RESORTE |
| | 5 | | 0321950218E | 1.00 | PERNO | PIN | PIVOT | STIFT | PERNO |
| | 6 | | 0322750111G | 1.00 | PIASTRA | PLATE | PLAQUE | PLATTE | PLANCHA |
| | 7 | | 0322760106L | 2.00 | PERNO | PIN | PIVOT | BOLZEN | PERNO |
| | 8 | | 0322760001F | 2.00 | BIELLA | CONNECTING ROD | BIELLE | PLEUELSTANGE | BIELA |
| | 9 | | 0000613086D | 4.00 | RALLA | BEARING | CRAPAUDINE | SCHEIBE | RANGUA |
| | 10 | | 0000644268H | 4.00 | ANELLO SEEGER | CIRCLIP | CIRCLIP | SEEGERRING | SEEGER |
| | 11 | | 0322760105G | 2.00 | PERNO | PIN | PIVOT | BOLZEN | PERNO |
| | 12 | | 0322775016F | 1.00 | TARGA | PLATE | PLAQUE | SCHILD | TARJETA |
| | 12 | | 0322775025E | 1.00 | TARGA | PLATE | PLAQUE | SCHILD | TARJETA |
| | 13 | | 0322775018A | 1.00 | TARGA | PLATE | PLAQUE | SCHILD | TARJETA |
| | 13 | | 0322775024C | 1.00 | TARGA | PLATE | PLAQUE | SCHILD | TARJETA |
| | 14 | | 0322760171F | 2.00 | PERNO | PIN | PIVOT | BOLZEN | PERNO |
| | 15 | | 0316023501B | 4.00 | VITE | SCREW | VIS | SCHRAUBE | TORNILLO |
| | 16 | | 0310050002C | 1.00 | ECCENTRICO | ECCENTRIC | EXCENTRIQUE | NOCKEN | EXCENTRICO |

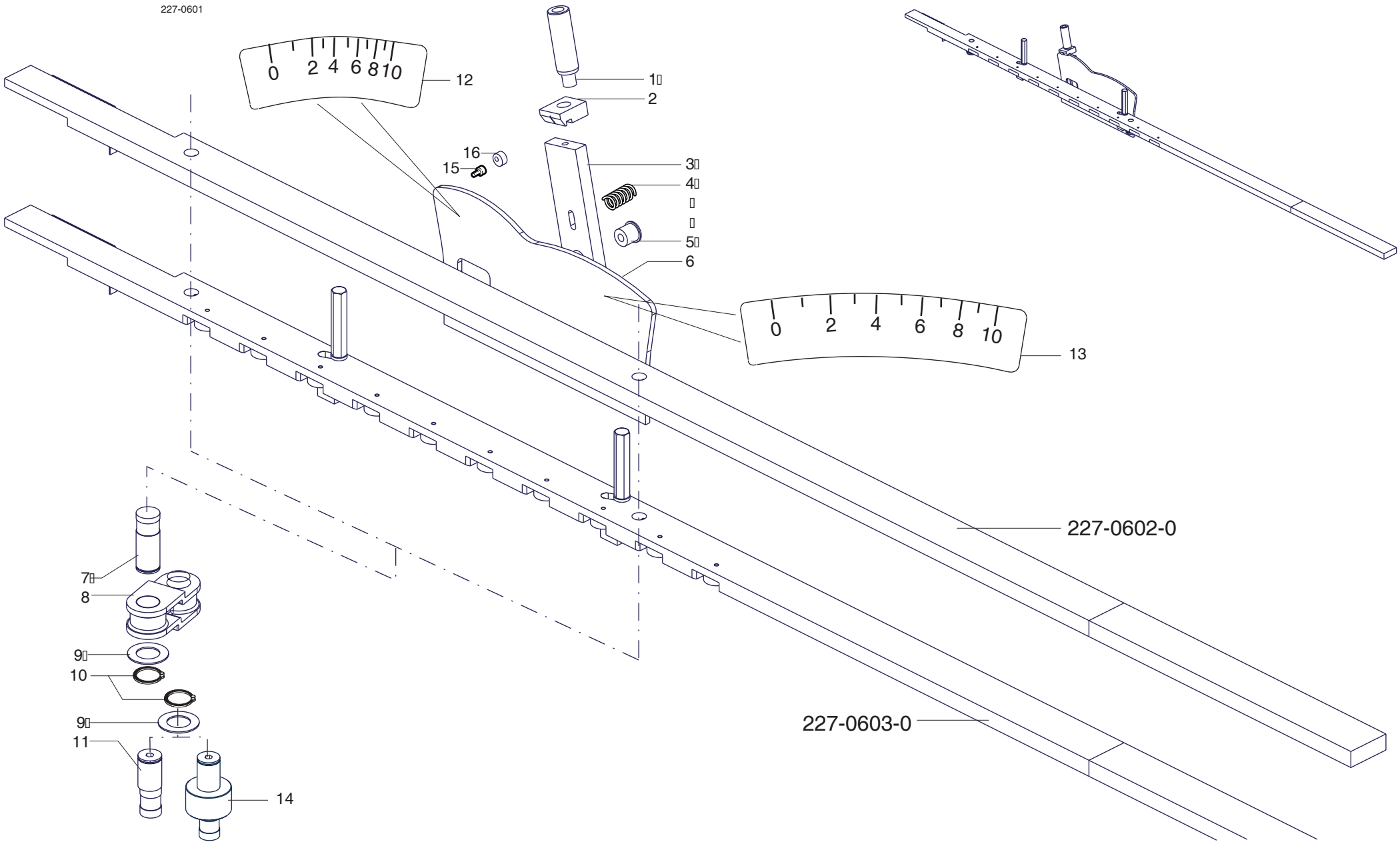


| scm | SUPERSET XL | GUIDA IN ENTRATA A PARALLELOGRAMMA - (01.01.1901 -> - p.20,06,2007)<br>PARALLELOGRAM INFEED FENCE - GUIDE ENTREE A PARALLELOGRAMME<br>PARALLELOGRAMM - FUEGELINEAL - GUIA ENTRADA A PARALELOGRAMA | 227-0601-0 |
|---|---|---|---|

| scm | SUPERSET XL | GUIDA - (p.20,06,2007)<br>FENCE - GUIDE<br>ANSCHLAG - GUIA | 227-0602-0 |
|---|---|---|---|

| N | P | C | CODICE | Q.TY | DENOMINAZIONE | DESCRIPTION | DESIGNATION | BEZEICHNUNG | DENOMINACION |
|---|---|---|---|---|---|---|---|---|---|
| | 01.01.1901 -> 01.01.3000 | | | | Note: 2822760086L | | | | |
| | 1 | | 0333150203L | 1.00 | PROTEZIONE | GUARD | PROTECTION | ABDECKUNG | PROTECCION MECANICA |
| | 2 | | 0322760107B | 1.00 | GUIDA DX L=2000 | GUIDE | GUIDE | FUEHRUNG | GUIA |
| | 2 | | 0322760108D | 1.00 | GUIDA DX L=2500 | GUIDE | GUIDE | FUEHRUNG | GUIA |
| | 2 | | 0322760116A | 1.00 | GUIDA (FILO QUADRO EL.) | GUIDE | GUIDE | FUEHRUNG | GUIA |
| | 2 | | 0322760130L | 1.00 | GUIDA L=1180 CROMATA | GUIDE | GUIDE | FUEHRUNG | GUIA |
| | 2 | | 0322760133F | 1.00 | GUIDA | GUIDE | GUIDE | FUEHRUNG | GUIA |
| | 2 | | 0322760188C | 1.00 | GUIDA FILO BAS. NO RAS. | GUIDE | GUIDE | FUEHRUNG | GUIA |
| | 3 | | 0322760165D | 1.00 | LAMIERINO | PLATE | TOLE | BLECH | CHAPA |
| | 4 | | 0519450146G | 1.00 | RISCONTRO ANTERIORE | STOP | BUTEE | ANSCHLAG | CONTROL ANT. |
| | 4 | | 0522760197F | 1.00 | RISCONTRO ANT. | STOP | BUTEE | ANSCHLAG | CONTROL ANT. |
| | 5 | | 0319450147E | 1.00 | CHIAVETTA | KEY | CLAVETTE | KEIL | CHAVETA |
| | 6 | | 0322760191H | 1.00 | GUIDA L=2000 S/RAS | GUIDE | GUIDE | FUEHRUNG | GUIA |
| | 6 | | 0322760196L | 1.00 | GUIDA S/RASANTE | GUIDE | GUIDE | FUEHRUNG | GUIA |
| | 6 | | 0322760199F | 1.00 | GUIDA S/RASANTE L=2500 | GUIDE | GUIDE | FUEHRUNG | GUIA |
| | 6 | | 0522760164F | 1.00 | GUIDA L=2500 P.SCAN | GUIDE | GUIDE | FUEHRUNG | GUIA |
| | 6 | | 0522760166A | 1.00 | GUIDA L=2000 P. SCAN | GUIDE | GUIDE | FUEHRUNG | GUIA |

227-0602

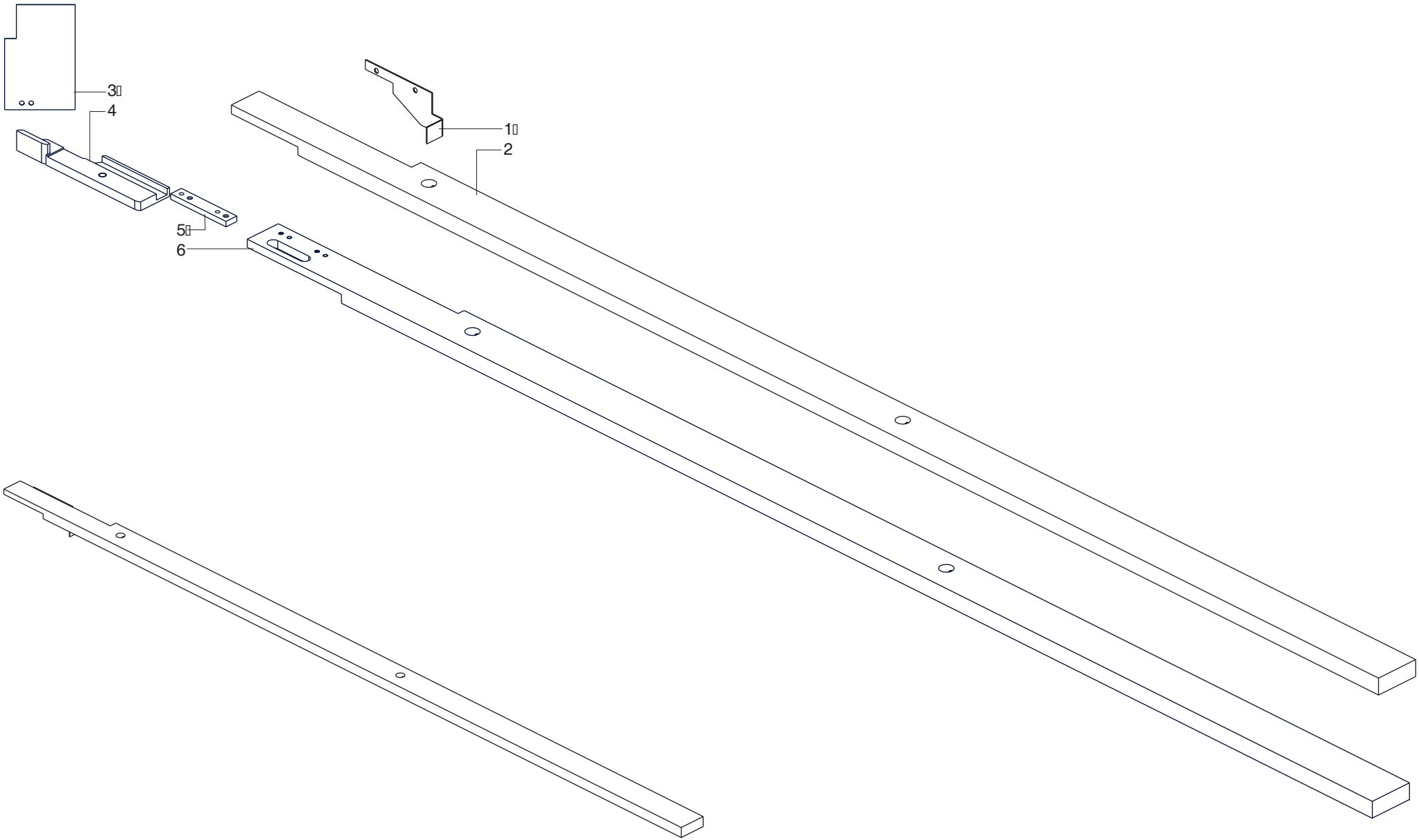


| | | | |
|---|---|---|---|
| scm | SUPERSET XL | GUIDA - (01.01.1901 -> - p.20,06,2007)<br>FENCE - GUIDE<br>ANSCHLAG - GUIA | 227-0602-0 |

| scm | SUPERSET XL | GUIDA - (p.20,06,2007)<br>FENCE - GUIDE<br>ANSCHLAG - GUIA | 227-0603-0 |
|---|---|---|---|

| N | P | C | CODICE | Q.TY | DENOMINAZIONE | DESCRIPTION | DESIGNATION | BEZEICHNUNG | DENOMINACION |
|---|---|---|---|---|---|---|---|---|---|
| | 01.01.1901 -> 01.01.3000 | | | | Note: 2822760082A | | | | |
| 1 | | | 0333150203L | 1.00 | PROTEZIONE | GUARD | PROTECTION | ABDECKUNG | PROTECCION MECANICA |
| 2 | | | 0322760111L | 1.00 | GUIDA DX L=2000 | GUIDE | GUIDE | FUEHRUNG | GUIA |
| 2 | | | 0322760112B | 1.00 | GUIDA DX L=2500 | GUIDE | GUIDE | FUEHRUNG | GUIA |
| 2 | | | 0322760115H | 1.00 | GUIDA DX L=1180 | GUIDE | GUIDE | FUEHRUNG | GUIA |
| 2 | | | 0322760132D | 1.00 | GUIDA | GUIDE | GUIDE | FUEHRUNG | GUIA |
| 2 | | | 0322760182L | 1.00 | GUIDA DX L=1300 | GUIDE | GUIDE | FUEHRUNG | GUIA |
| 3 | | | 0000606038D | 10.00 | CUSCINETTO | BEARING | ROULEMENT | LAGER | COJINETE |
| 4 | | | 0316511003F | 10.00 | PERNO | PIN | PIVOT | STIFT | PERNO |
| 5 | | | 0322760114F | 2.00 | VITE | SCREW | VIS | SCHRAUBE | TORNILLO |
| 6 | | | 0000305318D | 2.00 | ROSETTA | WASHER | RONDELLE | SCHEIBE | ARANDELA |
| 7 | | | 0322760113D | 2.00 | DISTANZIALE | SPACER | ENTRETOISE | DISTANZSTUECK | DISTANCIADOR |
| 8 | | | 0322760165D | 1.00 | LAMIERINO | PLATE | TOLE | BLECH | CHAPA |
| 9 | | | 0519450146G | 1.00 | RISCONTRO ANTERIORE | STOP | BUTEE | ANSCHLAG | CONTROL ANT. |
| 10 | | | 0319450147E | 1.00 | CHIAVETTA | KEY | CLAVETTE | KEIL | CHAVETA |
| 11 | | | 0322760177L | 1.00 | GUIDA | GUIDE | GUIDE | FUEHRUNG | GUIA |
| 11 | | | 0522760167C | 1.00 | GUIDA L=2000 P. SCAN | GUIDE | GUIDE | FUEHRUNG | GUIA |
| 11 | | | 0522760168E | 1.00 | GUIDA L=2500 P. SCAN | GUIDE | GUIDE | FUEHRUNG | GUIA |
| 12 | | | 0322760169C | 2.00 | BLOCCHETTO | BLOCK | BLOC | BLOCK | BLOQUE |

227-0603

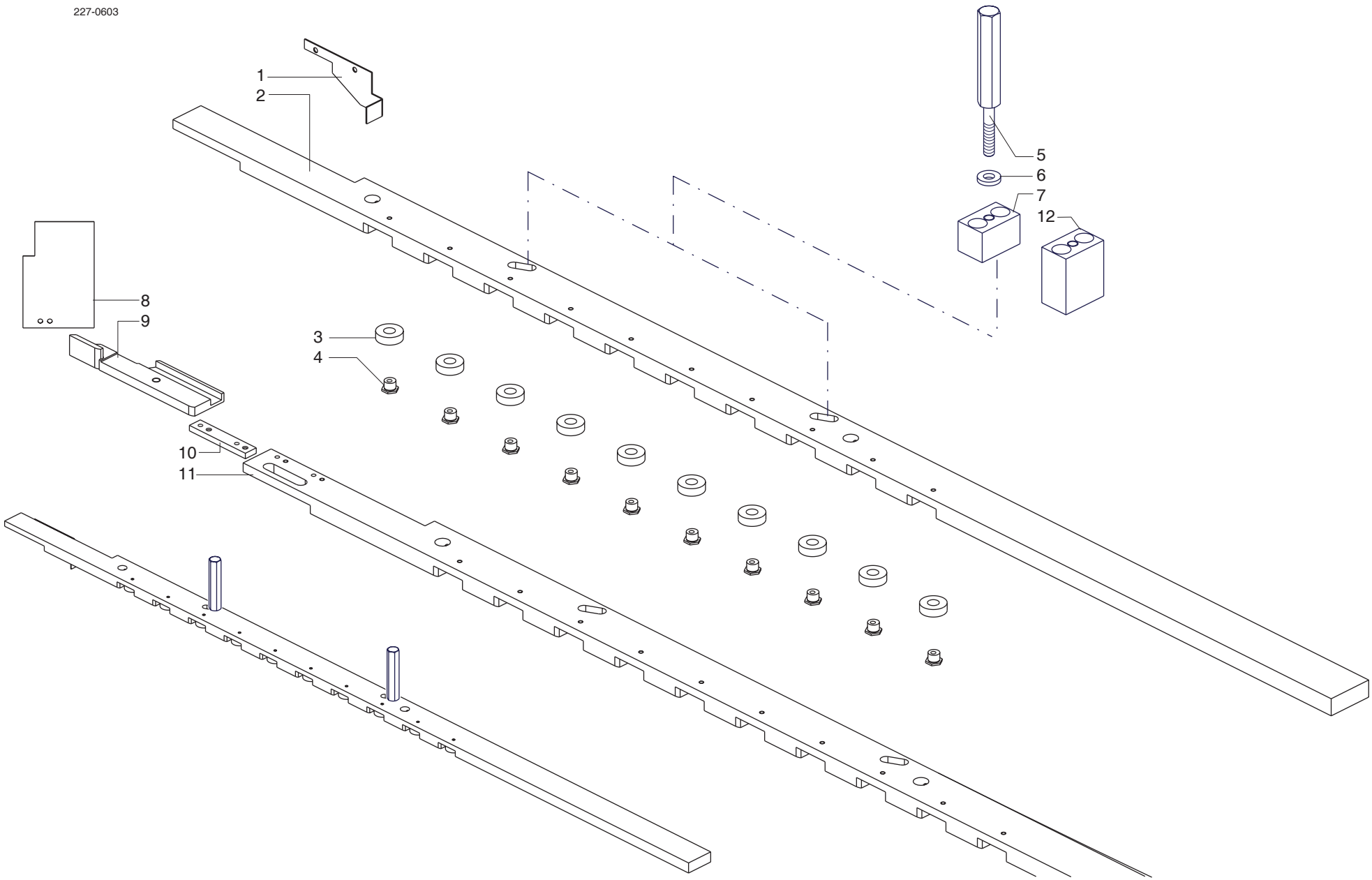


| | | | |
|---|---|---|---|
| scm | SUPERSET XL | GUIDA - (01.01.1901 -> - p.20,06,2007)<br>FENCE - GUIDE<br>ANSCHLAG - GUIA | 227-0603-0 |

| scm | SUPERSET XL | GUIDA PER INSERIM. PEZZI CON TRASLATORE - (p.20,06,2007)<br>AUTOMATIC FEED FENCE - GUIDE INSERTION PIECES AUTOMATIQUE<br>ANSCHLAG FUER AUT. STUECKEINLEGEN - GUIA PARA INTROD. PIEZAS CON TRANSLADOR | 227-0603-X |
|---|---|---|---|

| N | P | C | CODICE | Q.TY | DENOMINAZIONE | DESCRIPTION | DESIGNATION | BEZEICHNUNG | DENOMINACION |
|---|---|---|---|---|---|---|---|---|---|
| | 01.01.1901 -> 01.01.3000 | | | | Note: ----- | | | | |
| 1 | | | 0001308647G | 1.00 | FINECORSA | MICROSWITCH | FIN DE COURSE | MIKROSCHALTER | FIN CARRERA |
| 2 | | | 0322740051G | 1.00 | STAFFA | BRACKET | BRIDE | BUEGEL | ABRAZADERA |
| 3 | | | 0322740313D | 1.00 | SUPPORTO | SUPPORT | SUPPORT | STUETZE | SOPORTE |
| 4 | | | 0001302053L | 1.00 | FINECORSA | LIMIT SWITCH | FIN DE COURSE | ENDSCHALTER | FIN CARRERA |
| 5 | | | 0322760183B | 1.00 | GUIDA | GUIDE | GUIDE | FUEHRUNG | GUIA |
| 6 | | | 0519413606H | 1.00 | PROTEZIONE | GUARD | PROTECTION | ABDECKUNG | PROTECCION |
| 7 | | | 0001307992G | 2.00 | FINECORSA | MICROSWITCH | FIN DE COURSE | MIKROSCHALTER | FIN CARRERA |
| 8 | | | 0522760184H | 2.00 | LEVA | LEVER | LEVIER | HEBEL | PALANCA |
| 9 | | | 0322760185F | 2.00 | SUPPORTO | SUPPORT | SUPPORT | STUETZE | SOPORTE |
| 10 | | | 0000606186G | 6.00 | CUSC.RAD.RIG.1C SFERE | RIGID RADIAL BEARING | ROULEMENT RADIAL RIGIDE | RADIALKUGELLAGER 1 REIHE | COJ.RAD.RIG.1C ESF. |

2270603X

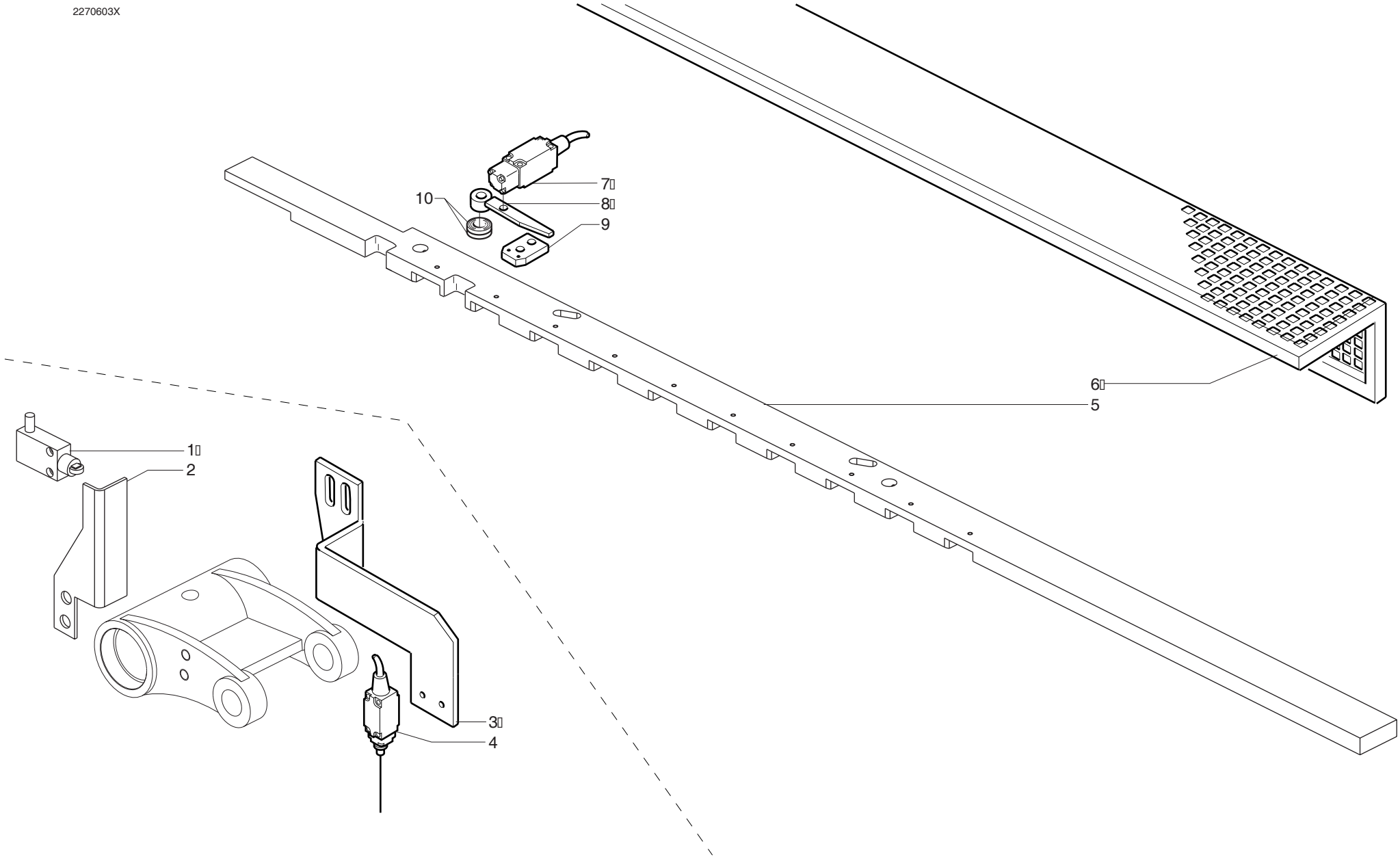


| scm | SUPERSET XL | GUIDA PER INSERIM. PEZZI CON TRASLATORE - (01.01.1901 -> - p.20,06,2007)<br>AUTOMATIC FEED FENCE - GUIDE INSERTION PIECES AUTOMATIQUE<br>ANSCHLAG FUER AUT. STUECKEINLEGEN - GUIA PARA INTROD. PIEZAS CON TRANSLADOR | 227-0603-X |
|---|---|---|---|

| scm | SUPERSET XL | GUIDE DI DESTRA - (p.20,06,2007)<br>RIGHT FENCES - GUIDES A DROITE<br>RECHTE ANSCHLAEGE - GUIAS DERECHA | 227-0604-0 |
|---|---|---|---|

| N | P | C | CODICE | Q.TY | DENOMINAZIONE | DESCRIPTION | DESIGNATION | BEZEICHNUNG | DENOMINACION |
|---|---|---|---|---|---|---|---|---|---|
| | 01.01.1901 -> 01.01.3000 | | | | Note: 2822760020L | | | | |
| | 1 | | 0322760104E | 1.00 | GUIDA | GUIDE | GUIDE | FUEHRUNG | GUIA |
| | 1 | | 0322760173A | 1.00 | GUIDA | GUIDE | GUIDE | FUEHRUNG | GUIA |
| | 2 | | 0322760109F | 1.00 | CHIUSURA | COVER | PIECE DE FERMETURE | DECKEL | CIERRE |
| | 3 | | 0322760110G | 1.00 | CHIUSURA | COVER | PIECE DE FERMETURE | DECKEL | CIERRE |
| | 4 | | 2722760101L | 1.00 | GUIDA | GUIDE | GUIDE | FUEHRUNG | GUIA |
| | 4 | | 2722760117D | 1.00 | GUIDA | GUIDE | GUIDE | FUEHRUNG | GUIA |
| | 4 | | 2722760172L | 1.00 | GUIDA | GUIDE | GUIDE | FUEHRUNG | GUIA |
| | 5 | | 0321370601E | 1.00 | GUIDA | GUIDE | GUIDE | FUEHRUNG | GUIA |
| | 5 | | 0324172915H | 1.00 | GUIDA | GUIDE | GUIDE | FUEHRUNG | GUIA |
| | 6 | | 0001309395C | 1.00 | FINECORSA | LIMIT SWITCH | FIN DE COURSE | ENDSCHALTER | FIN CARRERA |
| | 7 | | 0736237074E | 1.00 | CONN.DIR.F.CAVO MT3 | CONN.DIR.F.CAVO MT3 | CONN.DIR.F.CAVO MT3 | CONN.DIR.F.CAVO MT3 | CONN.DIR.F.CAVO MT3 |
| | 8 | | 2722760119H | 1.00 | GUIDA | GUIDE | GUIDE | FUEHRUNG | GUIA |
| | 9 | | 0322760118E | 1.00 | SUPPORTO | SUPPORT | SUPPORT | STUETZE | SOPORTE |
| | 10 | | 0001307764D | 1.00 | FINECORSA | MICROSWITCH | FIN DE COURSE | MIKROSCHALTER | FIN CARRERA |
| | 11 | | 0001347586E | 1.00 | LEVA | LEVER | LEVIER | HEBEL | PALANCA |
| | 12 | | 0311132517G | 1.00 | ANGOLARE | SQUARE SUPPORT | CORNIERE | WINKELSUPPORT | ESQUINERO |
| | 13 | | 0322760161E | 3.00 | DISTANZIALE | SPACER | ENTRETOISE | DISTANZSTUECK | DISTANCIADOR |

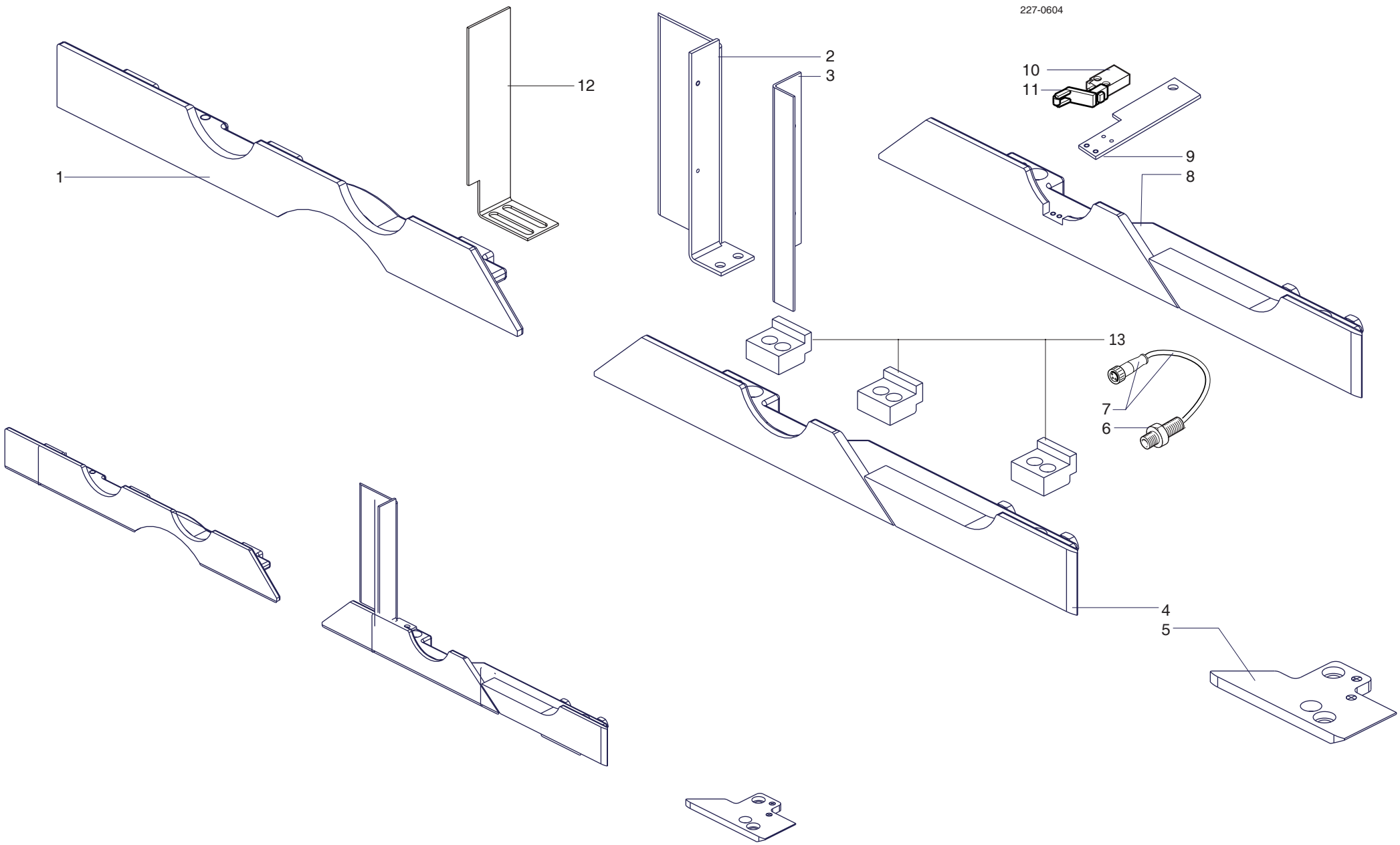


| | | | |
|---|---|---|---|
| scm | SUPERSET XL | GUIDE DI DESTRA - (01.01.1901 -> - p.20,06,2007)<br>RIGHT FENCES - GUIDES A DROITE<br>RECHTE ANSCHLAEGE - GUIAS DERECHA | 227-0604-0 |

| scm | SUPERSET XL | GUIDE DI DESTRA - (p.20,06,2007)<br>RIGHT FENCES - GUIDES A DROITE<br>RECHTE ANSCHLAEGE - GUIAS DERECHA | 227-0604-5 |
|---|---|---|---|

| N | P | C | CODICE | Q.TY | DENOMINAZIONE | DESCRIPTION | DESIGNATION | BEZEICHNUNG | DENOMINACION |
|---|---|---|---|---|---|---|---|---|---|
| | 01.01.1901 -> 01.01.3000 | | | | Note: 2822760020L | | | | |
| | 1 | | 0322760104E | 1.00 | GUIDA | GUIDE | GUIDE | FUEHRUNG | GUIA |
| | 1 | | 0322760142E | 1.00 | GUIDA H.40 | GUIDE | GUIDE | FUEHRUNG | GUIA |
| | 1 | | 0322760173A | 1.00 | GUIDA | GUIDE | GUIDE | FUEHRUNG | GUIA |
| | 2 | | 0322760131B | 1.00 | GUIDA | GUIDE | GUIDE | FUEHRUNG | GUIA |
| | 2 | | 0322760141C | 1.00 | GUIDA H.40 | GUIDE | GUIDE | FUEHRUNG | GUIA |
| | 2 | | 0322760175E | 1.00 | GUIDA | GUIDE | GUIDE | FUEHRUNG | GUIA |
| | 3 | | 0311132517G | 2.00 | ANGOLARE | SQUARE SUPPORT | CORNIERE | WINKELSUPPORT | ESQUINERO |
| | 4 | | 2722760101L | 1.00 | GUIDA | GUIDE | GUIDE | FUEHRUNG | GUIA |
| | 4 | | 2722760140B | 1.00 | GUIDA H.40 | GUIDE | GUIDE | FUEHRUNG | GUIA |
| | 4 | | 2722760172L | 1.00 | GUIDA | GUIDE | GUIDE | FUEHRUNG | GUIA |
| | 5 | | 0321370601E | 1.00 | GUIDA | GUIDE | GUIDE | FUEHRUNG | GUIA |
| | 5 | | 0324172915H | 1.00 | GUIDA | GUIDE | GUIDE | FUEHRUNG | GUIA |
| | 6 | | 0322760109F | 1.00 | CHIUSURA | COVER | PIECE DE FERMETURE | DECKEL | CIERRE |
| | 7 | | 0322760110G | 1.00 | CHIUSURA | COVER | PIECE DE FERMETURE | DECKEL | CIERRE |
| | 8 | | 0322760161E | 6.00 | DISTANZIALE | SPACER | ENTRETOISE | DISTANZSTUECK | DISTANCIADOR |
| | 9 | | 0311160301C | 2.00 | QUADRO | BOARD | PANNEAU | TAFEL | CUADRO |

22706045

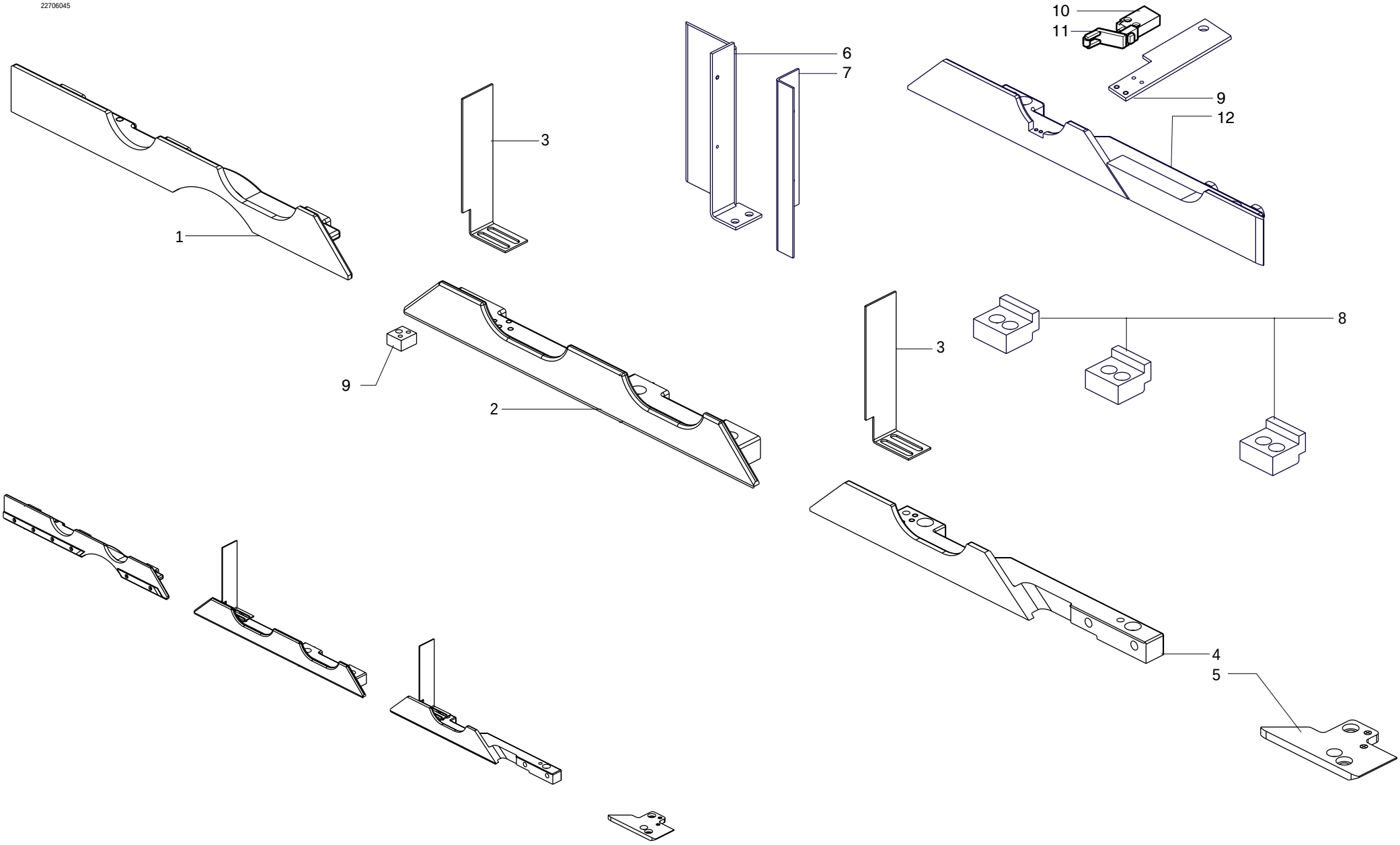


| | | | |
|---|---|---|---|
| scm | SUPERSET XL | GUIDE DI DESTRA - (01.01.1901 -> - p.20,06,2007)<br>RIGHT FENCES - GUIDES A DROITE<br>RECHTE ANSCHLAEGE - GUIAS DERECHA | 227-0604-5 |

| scm | SUPERSET XL | GUIDE DI DESTRA CON PIANO SCANALATO - (p.20,06,2007)<br>RIGHT FENCES WITH GROOVED TABLE - GRUIDES A DROITE TABLE CANNELEE<br>RECHTE ANSCHLAEGE GENUTETER TISCH - GUIAS DERECHA CON MESA ACANALADA | 227-0605-0 |
|---|---|---|---|

| N | P | C | CODICE | Q.TY | DENOMINAZIONE | DESCRIPTION | DESIGNATION | BEZEICHNUNG | DENOMINACION |
|---|---|---|---|---|---|---|---|---|---|
| | 01.01.1901 -> 01.01.3000 | | | | Note: 2822760021B | | | | |
| 1 | | | 0322760104E | 1.00 | GUIDA | GUIDE | GUIDE | FUEHRUNG | GUIA |
| 2 | | | 0322760161E | 3.00 | DISTANZIALE | SPACER | ENTRETOISE | DISTANZSTUECK | DISTANCIADOR |
| 3 | | | 2722760101L | 1.00 | GUIDA | GUIDE | GUIDE | FUEHRUNG | GUIA |
| 4 | | | 0322760110G | 1.00 | CHIUSURA | COVER | PIECE DE FERMETURE | DECKEL | CIERRE |
| 5 | | | 0322760109F | 1.00 | CHIUSURA | COVER | PIECE DE FERMETURE | DECKEL | CIERRE |

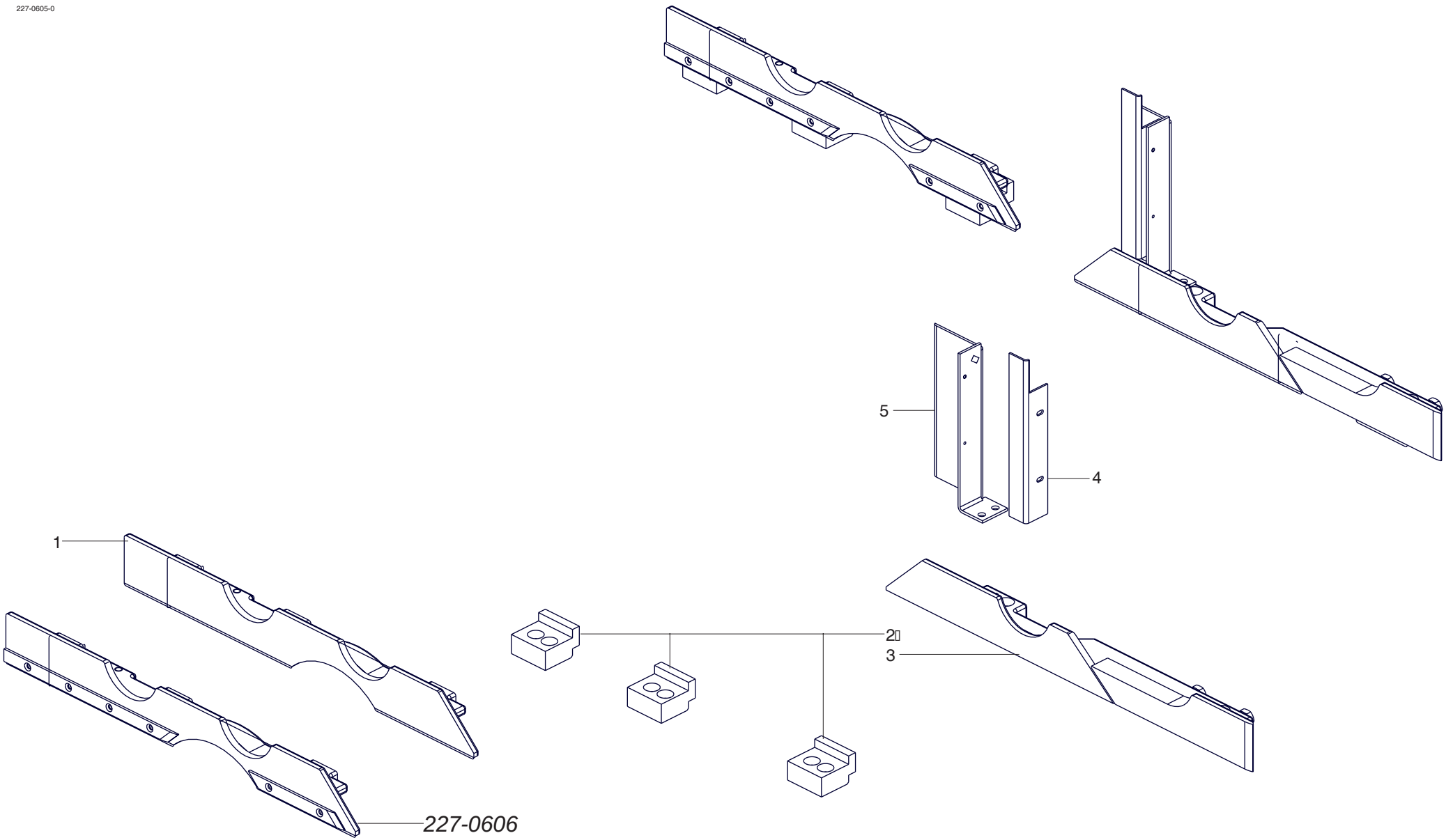


| | | | |
|---|---|---|---|
| scm | SUPERSET XL | GUIDE DI DESTRA CON PIANO SCANALATO - (01.01.1901 -> - p.20,06,2007)<br>RIGHT FENCES WITH GROOVED TABLE - GRUIDES A DROITE TABLE CANNELEE<br>RECHTE ANSCHLAEGE GENUTETER TISCH - GUIAS DERECHA CON MESA ACANALADA | 227-0605-0 |

| scm | SUPERSET XL | GUIDA PER RECUPERO LISTELLO - (p.20,06,2007)<br>FENCE FOR GLAZE BEAD RECOVERY UNIT - GUIDE RECUPERATION PARE-CLOSE<br>ANSCHLAG ZUM GLASLEISTEN-RUECKGEWINNEN - GUIA PARA RECUPERACION JUNQUILLO | 227-0606-0 |
|---|---|---|---|

| N | P | C | CODICE | Q.TY | DENOMINAZIONE | DESCRIPTION | DESIGNATION | BEZEICHNUNG | DENOMINACION |
|---|---|---|---|---|---|---|---|---|---|
| | 01.01.1901 -> 01.01.3000 | | | | Note: 2822760125C | | | | |
| 1 | | | 0322760128F | 1.00 | GUIDA | GUIDE | GUIDE | FUEHRUNG | GUIA |
| 2 | | | 0322760126B | 1.00 | GUIDA | GUIDE | GUIDE | FUEHRUNG | GUIA |
| 3 | | | 0322760127D | 1.00 | GUIDA | GUIDE | GUIDE | FUEHRUNG | GUIA |

227-0606

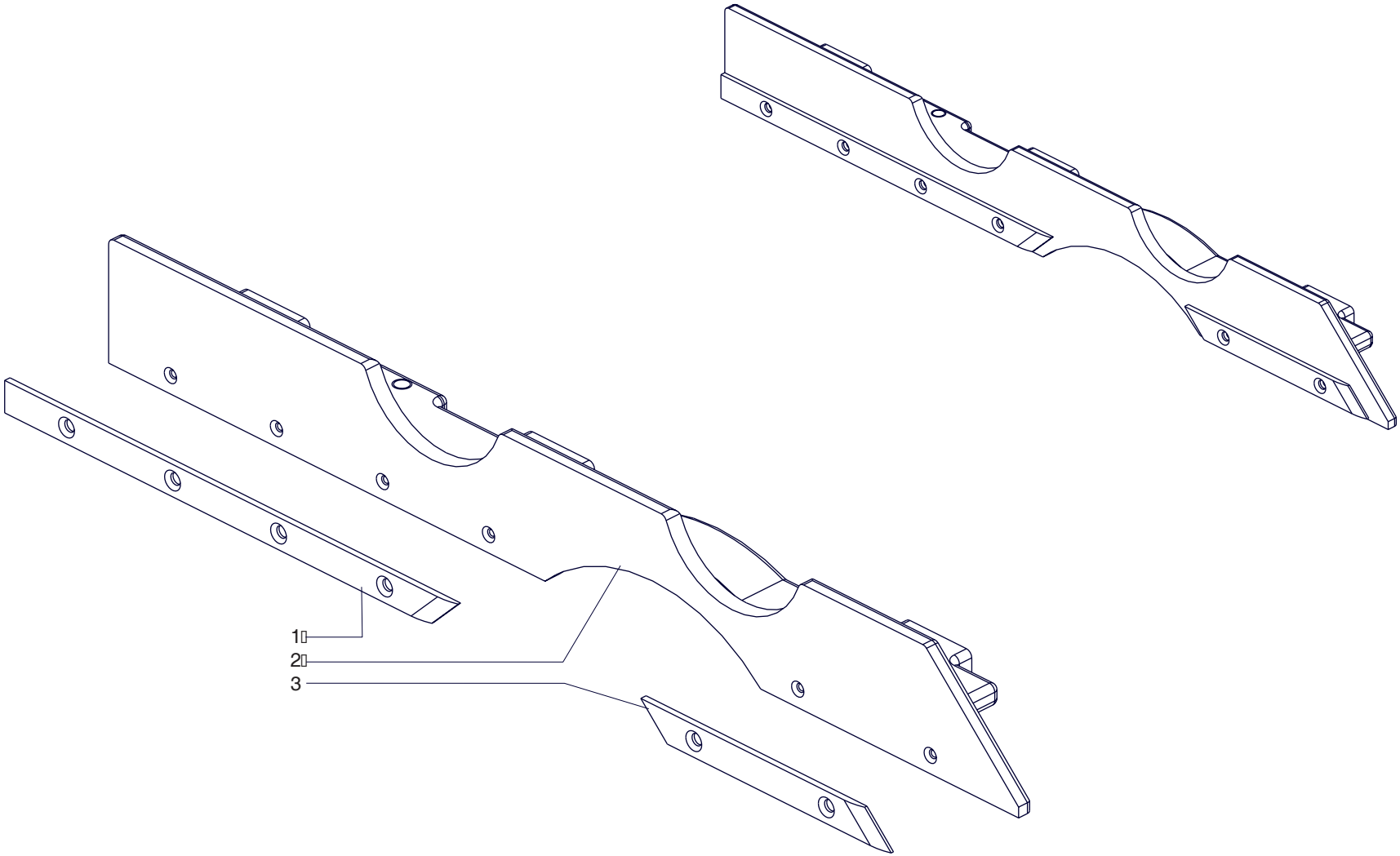


| | | | |
|---|---|---|---|
| scm | SUPERSET XL | GUIDA PER RECUPERO LISTELLO - (01.01.1901 -> - p.20,06,2007)<br>FENCE FOR GLAZE BEAD RECOVERY UNIT - GUIDE RECUPERATION PARE-CLOSE<br>ANSCHLAG ZUM GLASLEISTEN-RUECKGEWINNEN - GUIA PARA RECUPERACION JUNQUILLO | 227-0606-0 |

| scm | SUPERSET XL | GUIDE DI DESTRA (UNIVERSALE) - (p.20,06,2007)<br>RIGHT FENCES (UNIVERSAL) - GUIDES A DROITE (UNIVERSEL)<br>RECHTE ANSCHLAGE (UNIVERSALAGGR.) - GUIAS DERECHA (UNIVERSAL) | 227-0607-0 |
|---|---|---|---|

| N | P | C | CODICE | Q.TY | DENOMINAZIONE | DESCRIPTION | DESIGNATION | BEZEICHNUNG | DENOMINACION |
|---|---|---|---|---|---|---|---|---|---|
| | 01.01.1901 -> 01.01.3000 | | | | Note: 2822760030A | | | | |
| | 1 | | 0311161518E | 1.00 | GUIDA | GUIDE | GUIDE | FUEHRUNG | GUIA |
| | 1 | | 0322760120H | 1.00 | GUIDA | GUIDE | GUIDE | FUEHRUNG | GUIA |
| | 1 | | 0322760124G | 1.00 | GUIDA | GUIDE | GUIDE | FUEHRUNG | GUIA |
| | 1 | | 0322760174C | 1.00 | GUIDA | GUIDE | GUIDE | FUEHRUNG | GUIA |
| | 2 | | 0000640190G | 4.00 | DADO | NUT | ECROU | MUTTER | TUERCA |
| | 3 | | 0322760121A | 1.00 | SUPPORTO | SUPPORT | SUPPORT | STUETZE | SOPORTE |
| | 4 | | 0000301301C | 4.00 | DADO | NUT | ECROU | MUTTER | TUERCA |
| | 5 | | 0310170028D | 4.00 | VITE DI REGISTRO | SCREW | VIS REGLAGE | STELLSCHRAUBE | TORNILLO DE REGULACION |
| | 6 | | 0322760122C | 1.00 | SUPPORTO | SUPPORT | SUPPORT | STUETZE | SOPORTE |
| | 7 | | 0321970121C | 1.00 | GUIDA | GUIDE | GUIDE | FUEHRUNG | GUIA |
| | 7 | | 0321970509G | 1.00 | GUIDA | GUIDE | GUIDE | FUEHRUNG | GUIA |

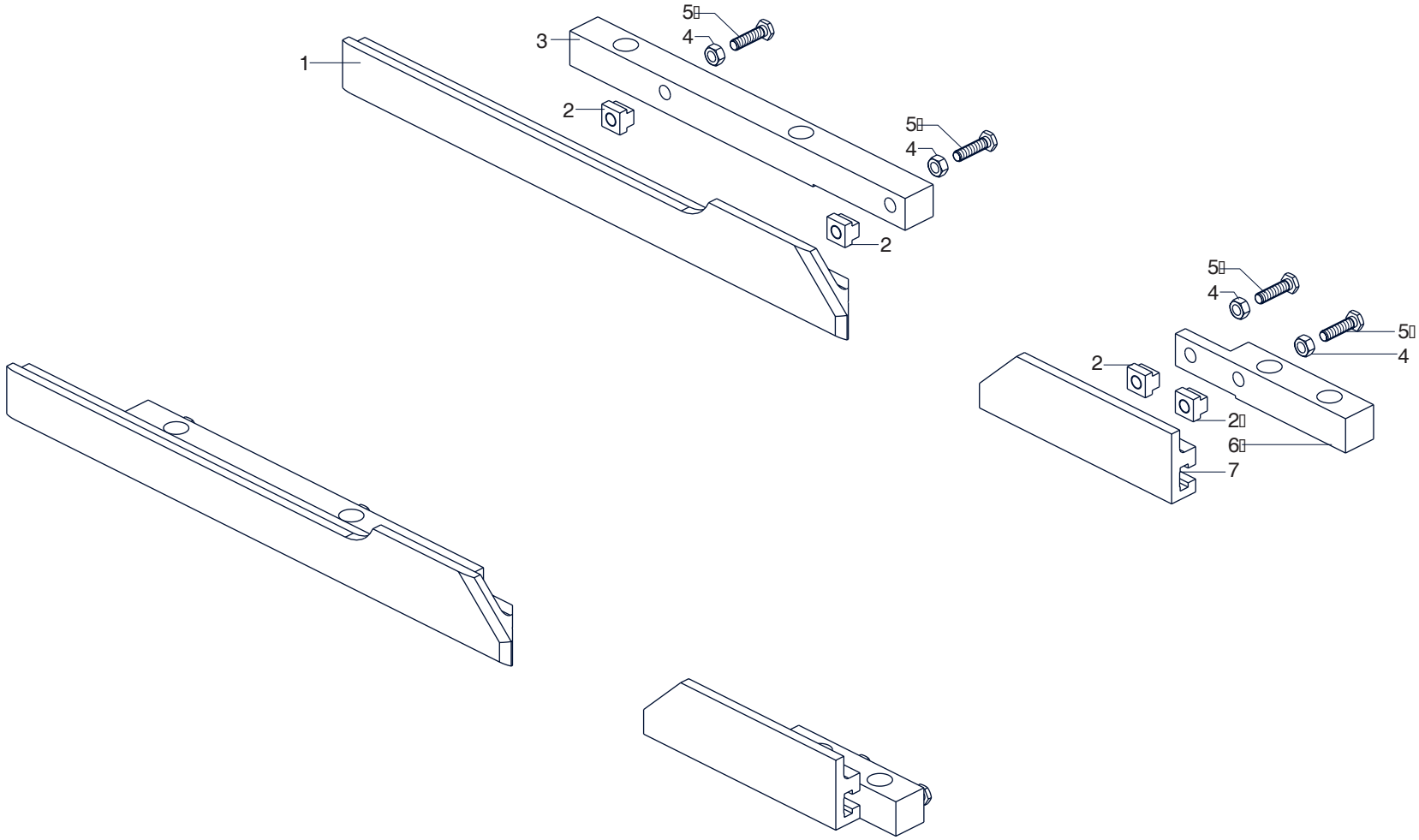


| | | | |
|---|---|---|---|
| scm | SUPERSET XL | GUIDE DI DESTRA (UNIVERSALE) - (01.01.1901 -> - p.20,06,2007)<br>RIGHT FENCES (UNIVERSAL) - GUIDES A DROITE (UNIVERSEL)<br>RECHTE ANSCHLAGE (UNIVERSALAGGR.) - GUIAS DERECHA (UNIVERSAL) | 227-0607-0 |

| scm | SUPERSET XL | GUIDE DI DESTRA CON PIANO SCANALATO(UN.) - (p.20,06,2007)<br>RIGHT FENCES WITH GROOVED TABLE (UN.) - GUIDES A DROITE AVEC TABLE RAINUREE (UN.<br>RECHTE ANSCHLAEGE MIT GENUTETEM TISCH(UN - GUIAS DERECHA CON MESA ACANALADA(UN.) | 227-0608-0 |
|---|---|---|---|

| N | P | C | CODICE | Q.TY | DENOMINAZIONE | DESCRIPTION | DESIGNATION | BEZEICHNUNG | DENOMINACION |
|---|---|---|---|---|---|---|---|---|---|
| | 01.01.1901 -> 01.01.3000 | | | | Note: 2822760031C | | | | |
| | 1 | | 0322760120H | 1.00 | GUIDA | GUIDE | GUIDE | FUEHRUNG | GUIA |
| | 2 | | 0000640190G | 4.00 | DADO | NUT | ECROU | MUTTER | TUERCA |
| | 3 | | 0322760162G | 1.00 | SUPPORTO | SUPPORT | SUPPORT | STUETZE | SOPORTE |
| | 4 | | 0000301301C | 4.00 | DADO | NUT | ECROU | MUTTER | TUERCA |
| | 5 | | 0310170028D | 4.00 | VITE DI REGISTRO | SCREW | VIS REGLAGE | STELLSCHRAUBE | TORNILLO DE REGULACION |
| | 6 | | 0322760163L | 1.00 | SUPPORTO | SUPPORT | SUPPORT | STUETZE | SOPORTE |
| | 7 | | 0321970121C | 1.00 | GUIDA | GUIDE | GUIDE | FUEHRUNG | GUIA |

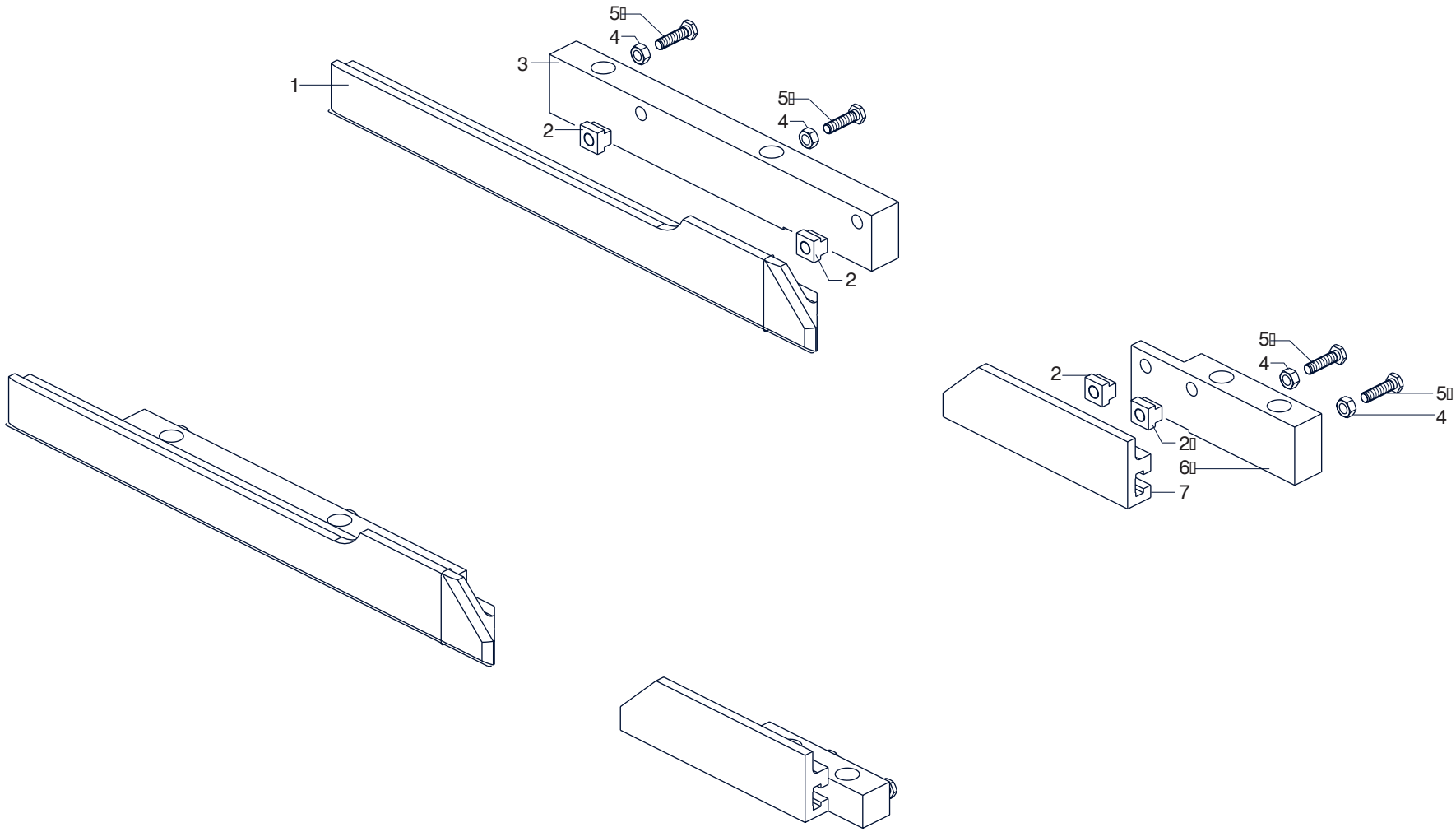


| | | | |
|---|---|---|---|
| scm | SUPERSET XL | GUIDE DI DESTRA CON PIANO SCANALATO(UN.) - (01.01.1901 -> - p.20,06,2007)<br>RIGHT FENCES WITH GROOVED TABLE (UN.) - GUIDES A DROITE AVEC TABLE RAINUREE (UN.<br>RECHTE ANSCHLAEGE MIT GENUTETEM TISCH(UN - GUIAS DERECHA CON MESA ACANALADA(UN.) | 227-0608-0 |

| scm | SUPERSET XL | GUIDA SINISTRA IN USCITA (UNIV.) - (p.20,06,2007)<br>LEFT OUTLET FENCE - GUIDE GAUCHE EN SORTIE<br>LINKER AUSGABEANSCHLAG - GUIA IZQUIERDA EN SALIDA | 227-0609-0 |
|---|---|---|---|

| N | P | C | CODICE | Q.TY | DENOMINAZIONE | DESCRIPTION | DESIGNATION | BEZEICHNUNG | DENOMINACION |
|---|---|---|---|---|---|---|---|---|---|
| | 01.01.1901 -> 01.01.3000 | | | | Note: 2822760500H | | | | |
| | 1 | | 0719412602C | 2.00 | MANIGLIA | HANDLE | POIGNEE | HANDGRIFF | MANIJA |
| | 2 | | 0322760502L | 1.00 | GUIDA SX | GUIDE | GUIDE | FUEHRUNG | GUIA |
| | 3 | | 0322760501G | 1.00 | GUIDA SX | GUIDE | GUIDE | FUEHRUNG | GUIA |
| | 4 | | 0000644272F | 2.00 | ANELLO | RING | BAGUE | RING | ANILLO |
| | 5 | | 0321960329C | 2.00 | PERNO | PIN | PIVOT | STIFT | PERNO |
| | 6 | | 0522760503F | 2.00 | SOSTEGNO | SUPPORT | SUPPORT | SUPPORT | SOSTEN |
| | 7 | | 0311160925G | 1.00 | GUIDA | GUIDE | GUIDE | FUEHRUNG | GUIA |
| | 8 | | 0322760504D | 1.00 | CHIUSURA | COVER | PIECE DE FERMETURE | DECKEL | CIERRE |

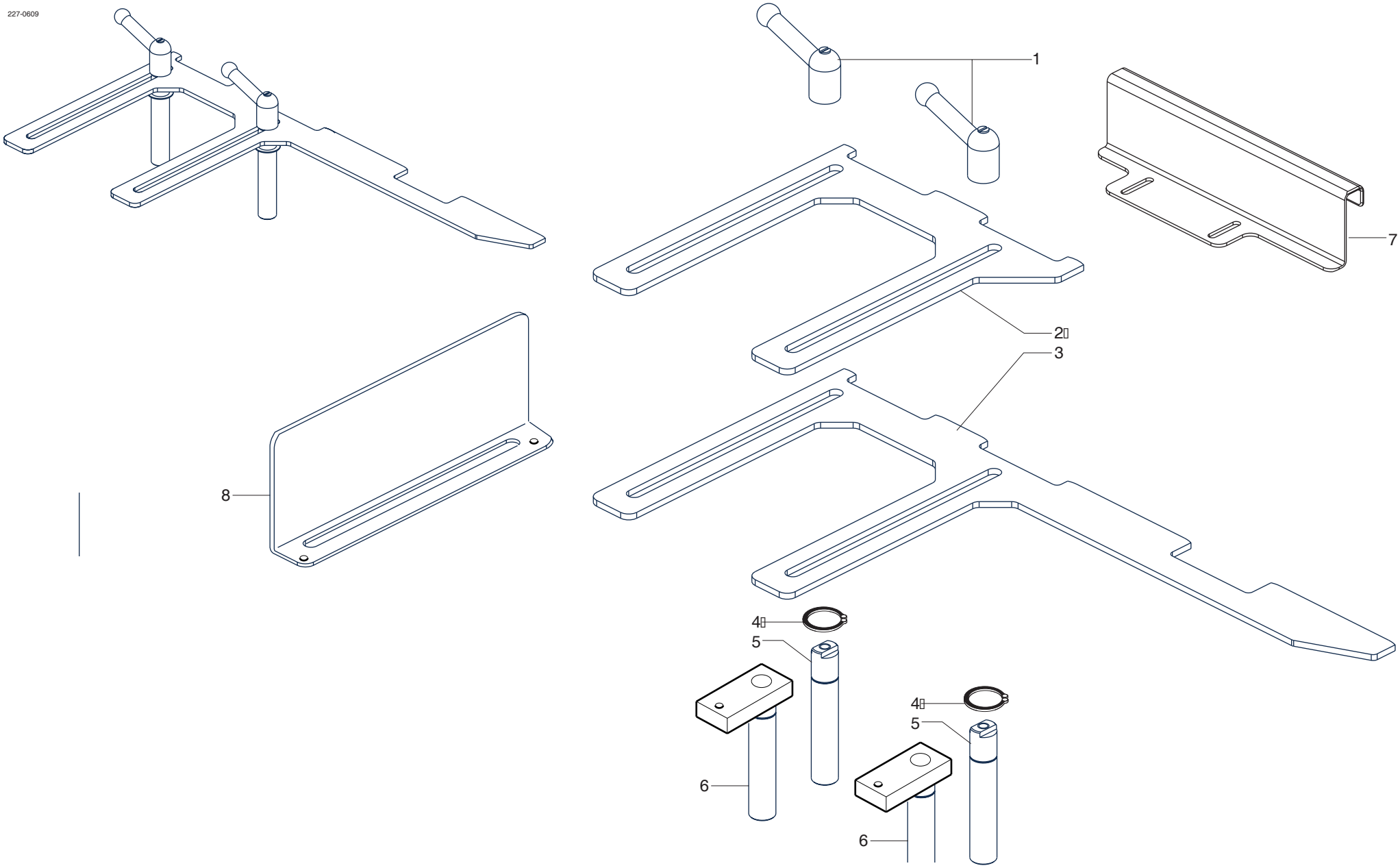


| | | | |
|---|---|---|---|
| scm | SUPERSET XL | GUIDA SINISTRA IN USCITA (UNIV.) - (01.01.1901 -> - p.20,06,2007)<br>LEFT OUTLET FENCE - GUIDE GAUCHE EN SORTIE<br>LINKER AUSGABEANSCHLAG - GUIA IZQUIERDA EN SALIDA | 227-0609-0 |

| scm | SUPERSET XL | GUIDE DI DESTRA (PRL) - (p.20,06,2007)<br>RIGHT FENCES - GUIDES A DROITE<br>RECHTE ANSCHLAGE - GUIAS DERECHA | 227-0610-0 |
|---|---|---|---|

| N | P | C | CODICE | Q.TY | DENOMINAZIONE | DESCRIPTION | DESIGNATION | BEZEICHNUNG | DENOMINACION |
|---|---|---|---|---|---|---|---|---|---|
| | 01.01.1901 -> 01.01.3000 | | | | Note: ----- | | | | |
| | 1 | | 0322760129H | 1.00 | GUIDA | GUIDE | GUIDE | FUEHRUNG | GUIA |

227-0610

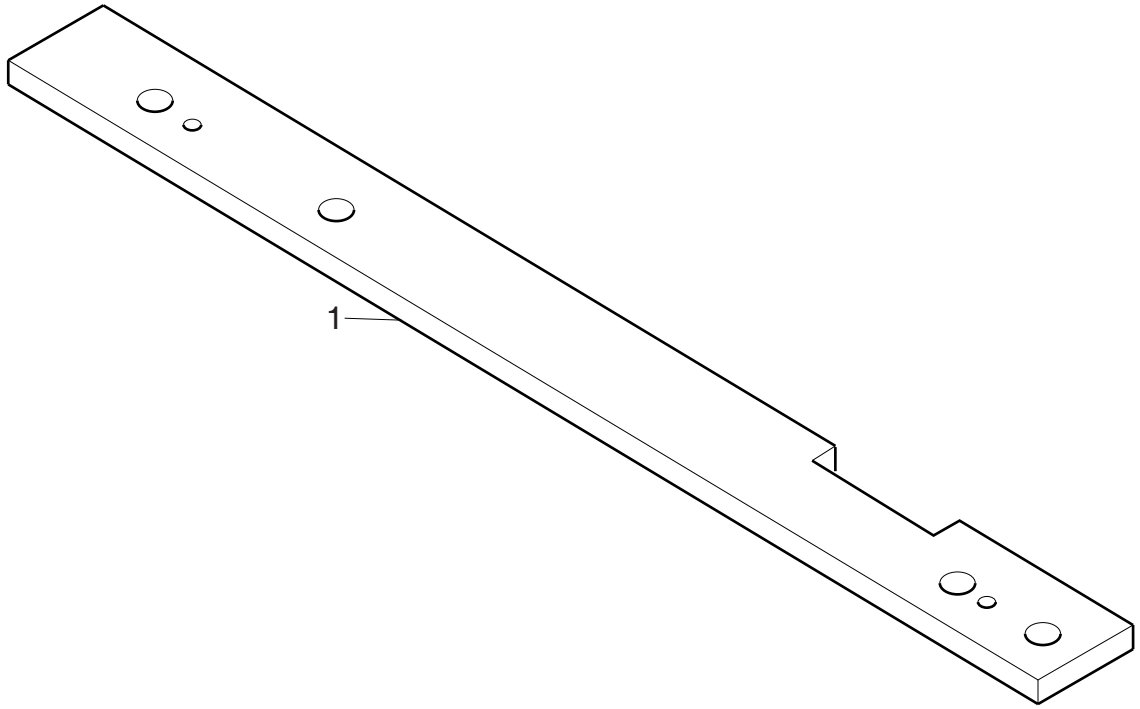


| | | | |
|---|---|---|---|
| scm | SUPERSET XL | GUIDE DI DESTRA (PRL) - (01.01.1901 -> - p.20,06,2007)<br>RIGHT FENCES - GUIDES A DROITE<br>RECHTE ANSCHLAGE - GUIAS DERECHA | 227-0610-0 |

| scm | SUPERSET XL | GUIDA SINISTRA IN USCITA (CLASS) - (p.20,06,2007)<br>LEFT OUTLET FENCE - GUIDE GAUCHE EN SORTIE<br>LINKER AUSGABEANSCHLAG - GUIA IZQUIERDA EN SALIDA | 227-0611-0 |
|---|---|---|---|

| N | P | C | CODICE | Q.TY | DENOMINAZIONE | DESCRIPTION | DESIGNATION | BEZEICHNUNG | DENOMINACION |
|---|---|---|---|---|---|---|---|---|---|
| | 01.01.1901 -> 01.01.3000 | | | | Note: 2822760500H | | | | |
| | 1 | | 0719412602C | 4.00 | MANIGLIA | HANDLE | POIGNEE | HANDGRIFF | MANIJA |
| | 2 | | 0000304309D | 4.00 | GRANO | DOWEL | VIS SIX PANS CREUX | DUEBEL | PASADOR |
| | 3 | | 0000305307A | 2.00 | ROSETTA | WASHER | RONDELLE | SCHEIBE | ARANDELA |
| | 4 | | 0322760514E | 2.00 | SUPPORTO | SUPPORT | SUPPORT | STUETZE | SOPORTE |
| | 5 | | 0322760511H | 1.00 | GUIDA | GUIDE | GUIDE | FUEHRUNG | GUIA |
| | 5 | | 0322760515G | 1.00 | GUIDA | GUIDE | GUIDE | FUEHRUNG | GUIA |
| | 6 | | 0522760503F | 2.00 | SOSTEGNO | SUPPORT | SUPPORT | SUPPORT | SOSTEN |

227-0611

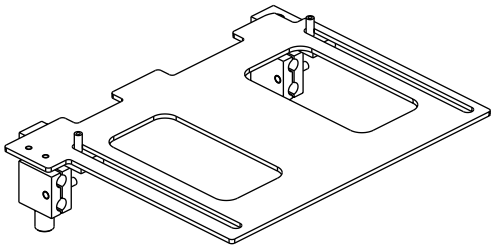

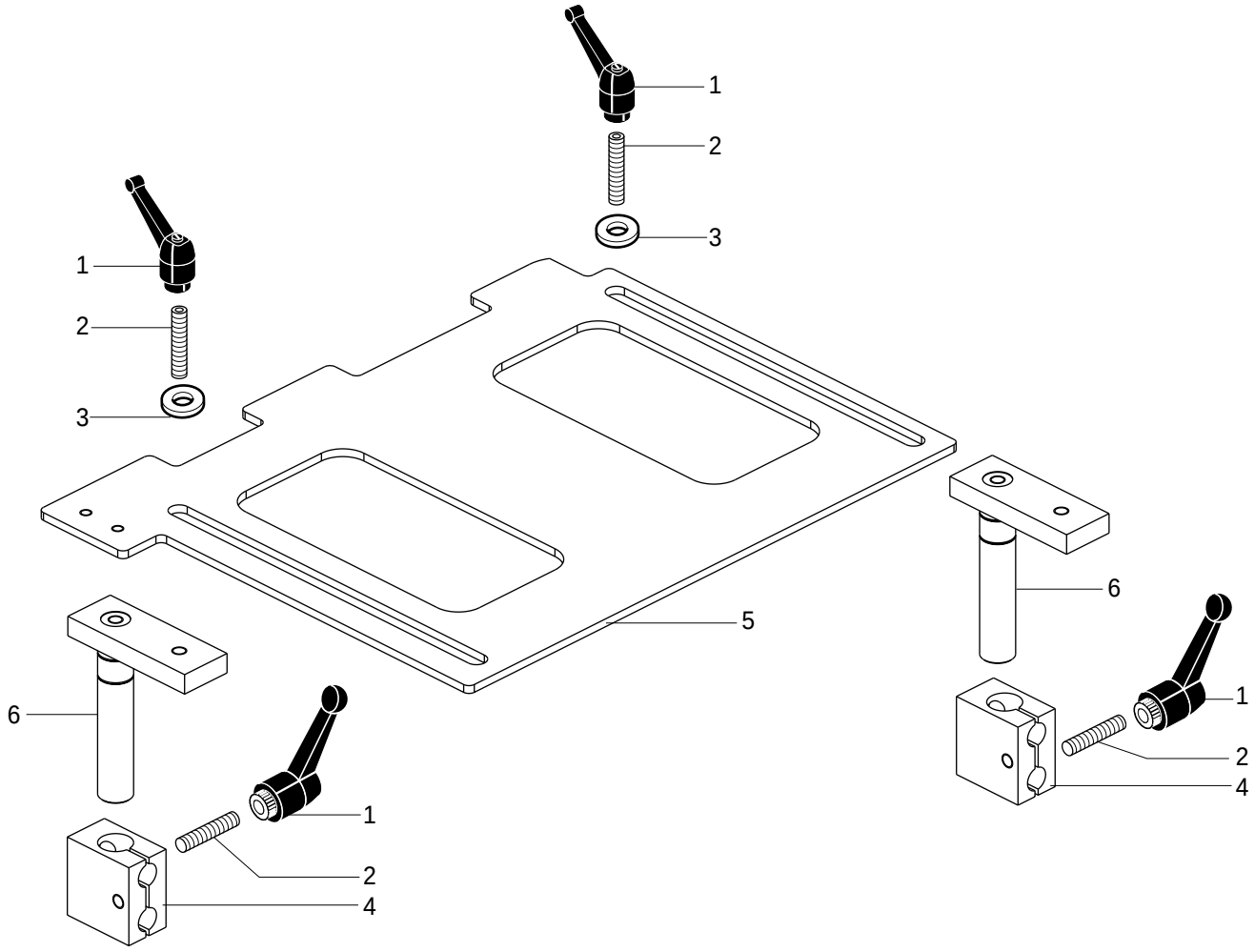


| scm | SUPERSET XL | GUIDA SINISTRA IN USCITA (CLASS) - (01.01.1901 -> - p.20,06,2007)<br>LEFT OUTLET FENCE - GUIDE GAUCHE EN SORTIE<br>LINKER AUSGABEANSCHLAG - GUIA IZQUIERDA EN SALIDA | 227-0611-0 |
|---|---|---|---|

| N | P | C | CODICE | Q.TY | DENOMINAZIONE | DESCRIPTION | DESIGNATION | BEZEICHNUNG | DENOMINACION |
|---|---|---|---|---|---|---|---|---|---|
| | 01.01.1901 -> 01.01.3000 | | | | Note: 2822740500D | | | | |
| | 1 | | 1111111111F | 0.00 | INDICE | POINTER | INDICATEUR | ZEIGER | INDICE |

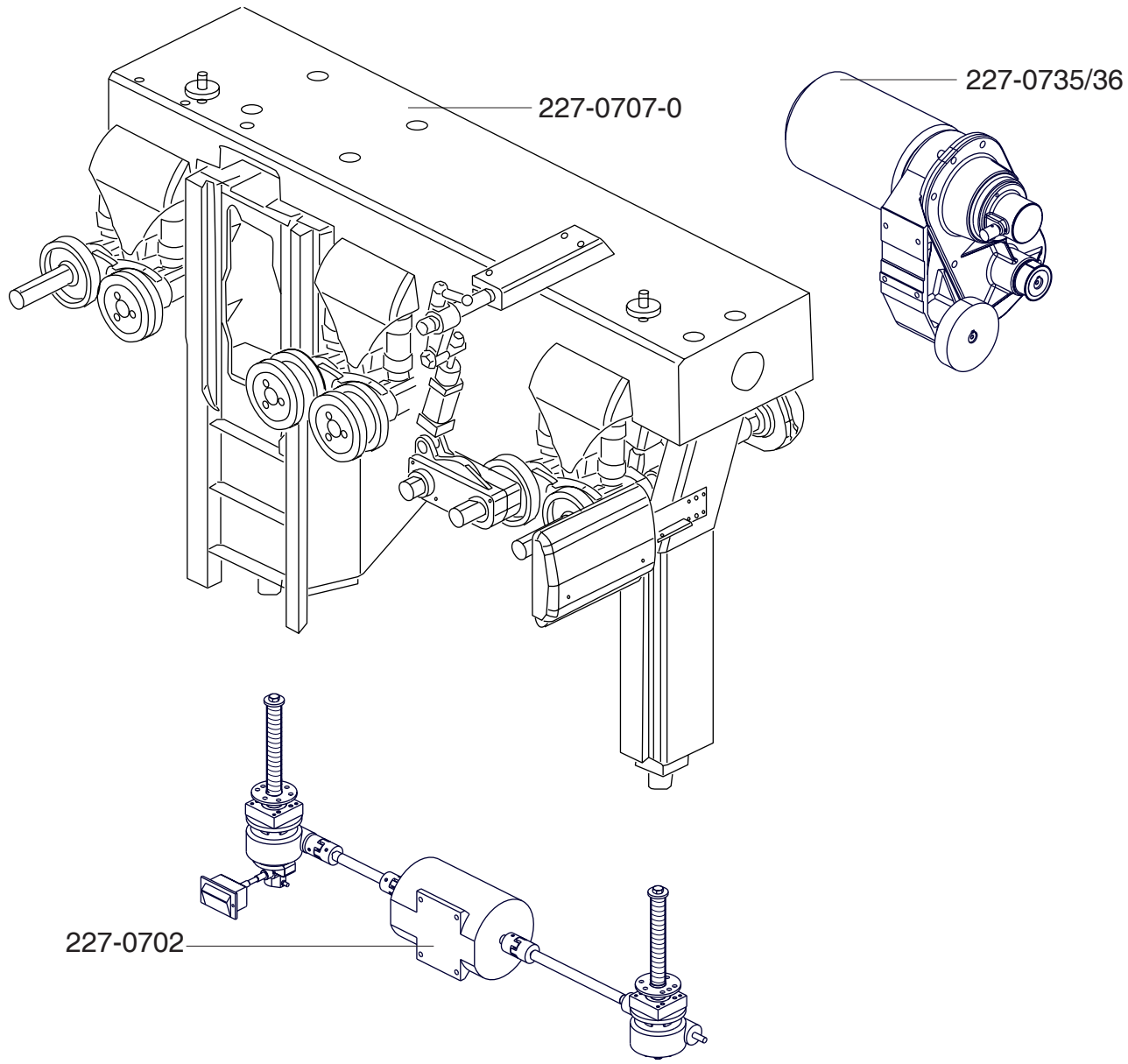
227-0707-0
227-0735/36
227-0702

| N | P | C | CODICE | Q.TY | DENOMINAZIONE | DESCRIPTION | DESIGNATION | BEZEICHNUNG | DENOMINACION |
|---|---|---|---|---|---|---|---|---|---|
| | 01.01.1901 -> 01.01.3000 | | | | Note: 2822740600F | | | | |
| | 1 | | 1111111111F | 0.00 | INDICE | POINTER | INDICATEUR | ZEIGER | INDICE |

22707015

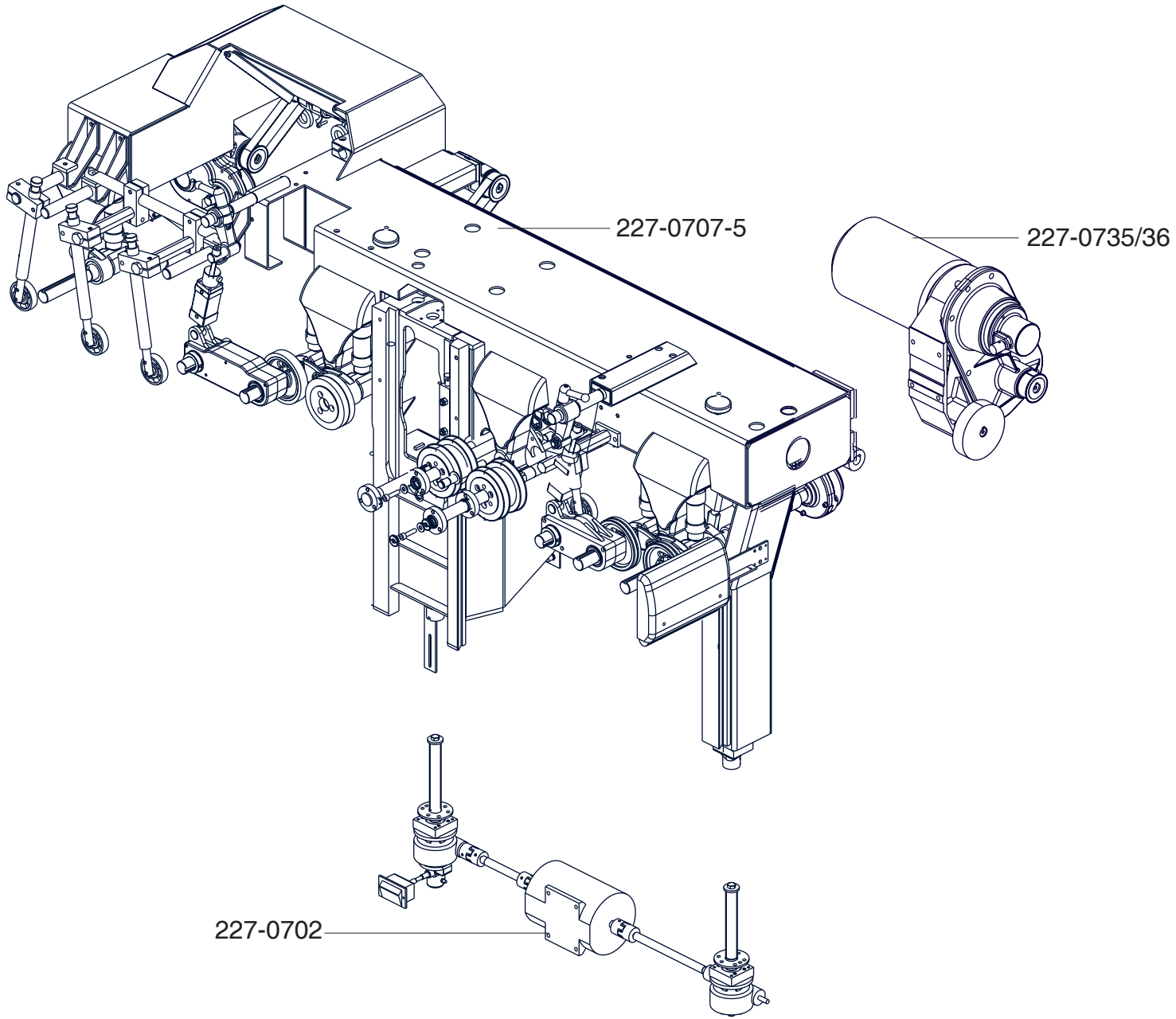


| | | | |
|---|---|---|---|
| scm | SUPERSET XL | TRAVERSA - TRAINO - (01.01.1901 -> - p.20,06,2007)<br>TRAVERSE - FEED - TRAVERSE - ENTRAINEMENT<br>QUERTRAEGER - VORSCHUB - PUENTE - ARRASTRE | 227-0701-5 |

| N | P | C | CODICE | Q.TY | DENOMINAZIONE | DESCRIPTION | DESIGNATION | BEZEICHNUNG | DENOMINACION |
|---|---|---|---|---|---|---|---|---|---|
| | 01.01.1901 -> 01.01.3000 | | | | Note: 2822740400B | | | | |
| | 1 | | 1111111111F | 0.00 | INDICE | POINTER | INDICATEUR | ZEIGER | INDICE |

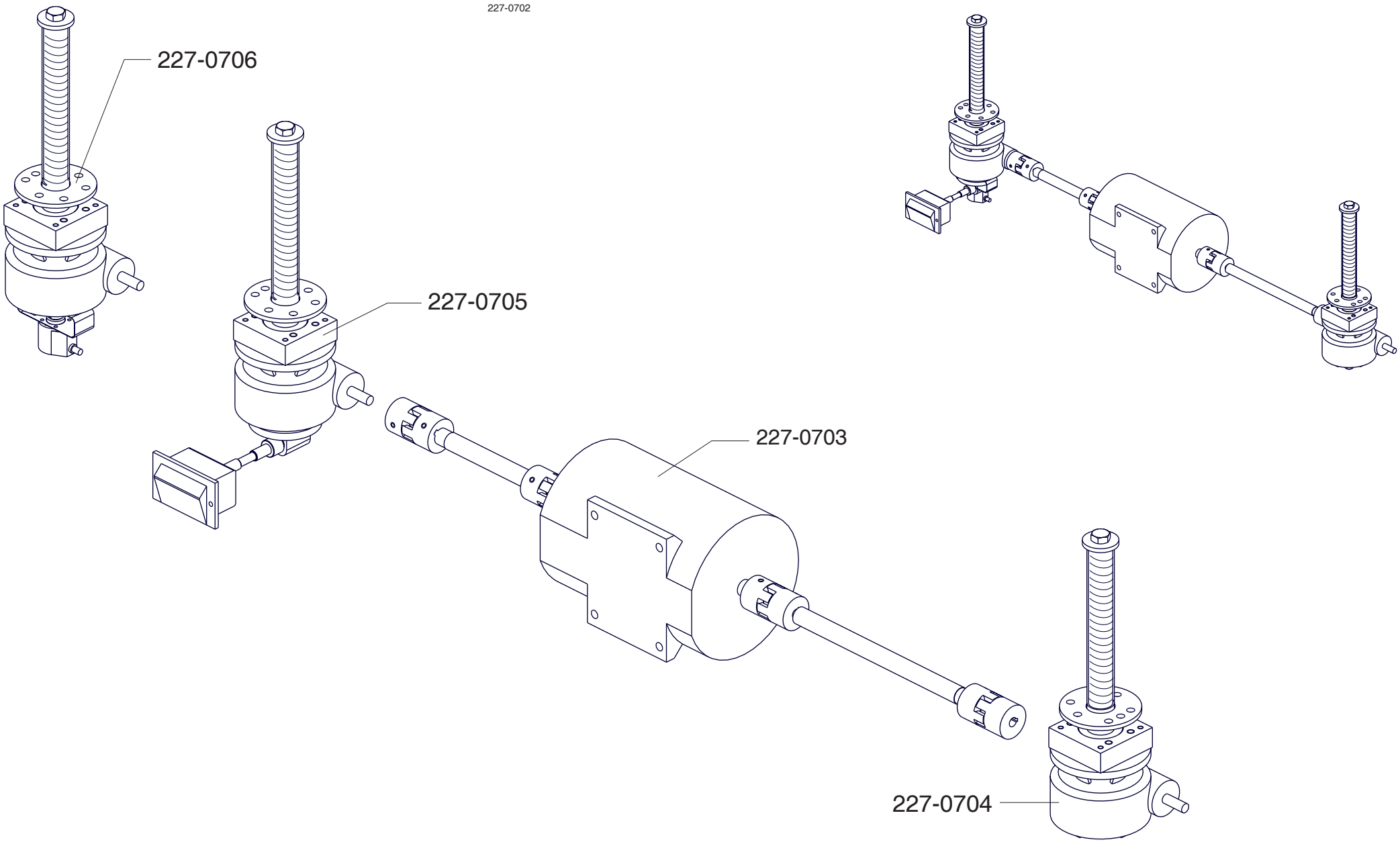


| | | | |
|---|---|---|---|
| scm | SUPERSET XL | MOTORIZZAZIONE SOLLEVAMENTO - (01.01.1901 -> - p.20,06,2007)<br>LIFTING MOTORIZATION UNIT - MOTORISATION<br>HUBMOTORISIERUNG - MOTORIZACION ELEVACION | 227-0702-0 |

| N | P | C | CODICE | Q.TY | DENOMINAZIONE | DESCRIPTION | DESIGNATION | BEZEICHNUNG | DENOMINACION |
|---|---|---|---|---|---|---|---|---|---|
| | 01.01.1901 -> 01.01.3000 | | | | Note: 2822740430E | | | | |
| | 1 | | 0721940231H | 4.00 | GIUNTO | JOINT | JOINT | KUPPLUNG | JUNTA |
| | 2 | | 0000645047A | 2.00 | LINGUETTA | FEATHER KEY | LANGUETTE | FEDERKEIL | LINGUETA |
| | 3 | | 0322740137A | 1.00 | BARRA | BAR | BARRE | STANGE | BARRA |
| | 3 | | 0322741531G | 1.00 | BARRA (CLASS) L=416 | BAR | BARRE | STANGE | BARRA |
| | 4 | | 0000645005B | 2.00 | LINGUETTA | FEATHER KEY | LANGUETTE | FEDERKEIL | LINGUETA |
| | 5 | | 0001314355E | 1.00 | MOTORE TRIF. | 3-PH. MOTOR | 3-PH. MOTEUR | 3-PH. MOTOR | MOT.TRIFAS. |
| | 6 | | 0322740138C | 1.00 | BARRA L=193 | BAR | BARRE | STANGE | BARRA |
| | 6 | | 0322740148D | 1.00 | BARRA L=153 | BAR | BARRE | STANGE | BARRA |

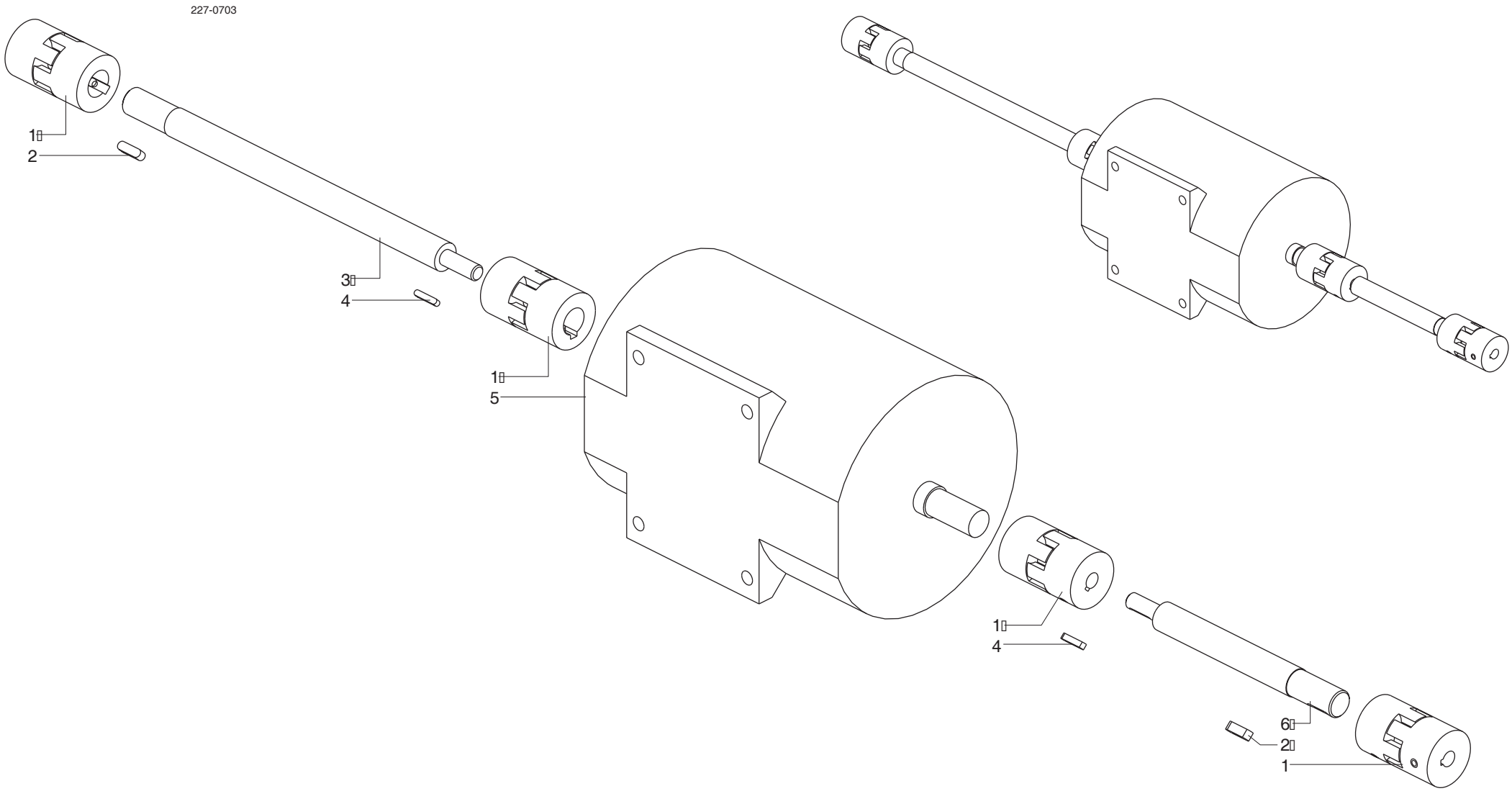


| | | | |
|---|---|---|---|
| scm | SUPERSET XL | SOLLEVAMENTO TRAVERSA (MOTORIZZAZIONE) - (01.01.1901 -> - p.20,06,2007)<br>TRAVERSE LIFTING (MOTORIZATION) - SOULEVEMENT TRAVERSE MOTORISATION<br>QUERTRAEGERHUB (MOTORISIERUNG) - ELEVACION PUENTE | 227-0703-0 |

| N | P | C | CODICE | Q.TY | DENOMINAZIONE | DESCRIPTION | DESIGNATION | BEZEICHNUNG | DENOMINACION |
|---|---|---|---|---|---|---|---|---|---|
| | 01.01.1901 -> 01.01.3000 | | | | Note: ----- | | | | |
| | 1 | | 0738210165A | 1.00 | SERVOMOTORE | SERVOMOTOR | SERVOMOTEUR | SERVOMOTOR | SERVOMOTOR |
| | 2 | | 0000308318G | 1.00 | VITE | SCREW | VIS | SCHRAUBE | TORNILLO |
| | 3 | | 0000301301C | 1.00 | DADO | NUT | ECROU | MUTTER | TUERCA |
| | 4 | | 0000641626E | 1.00 | RIDUTTORE | REDUCING GEAR | REDUCTEUR | GETRIEBE | REDUCTOR |
| | 5 | | 0566540103D | 1.00 | SUPPORTO | SUPPORT | SUPPORT | STUETZE | SOPORTE |
| | 6 | | 0000644268H | 2.00 | ANELLO SEEGER | CIRCLIP | CIRCLIP | SEEGERRING | SEEGER |
| | 7 | | 0000606109E | 2.00 | CUSC.RAD.RIG.1C SFERE | RIGID RADIAL BEARING | ROULEMENT RADIAL RIGIDE | RADIALKUGELLAGER 1 REIHE | COJ.RAD.RIG.1C ESF. |
| | 8 | | 0000644048B | 2.00 | ANELLO ELASTICO | SPRING RING | BAGUE POUR GAINE | FEDERRING | ANILLO ELASTICO |
| | 9 | | 0000645092E | 1.00 | LINGUETTA | FEATHER KEY | LANGUETTE | FEDERKEIL | LINGUETA |
| | 10 | | 0000645015C | 1.00 | LINGUETTA | FEATHER KEY | LANGUETTE | FEDERKEIL | LINGUETA |
| | 11 | | 0366540107H | 1.00 | ALBERO | SHAFT | ARBRE | WELLE | EJE |
| | 12 | | 0000645005B | 1.00 | LINGUETTA | FEATHER KEY | LANGUETTE | FEDERKEIL | LINGUETA |
| | 13 | | 0366542532B | 1.00 | PULEGGIA | PULLEY | POULIE | RIEMENSCHEIBE | POLEA |
| | 14 | | 0000604202L | 1.00 | CINGHIA DENTATA | TOOTHED BELT | COURROIE DENTEE | ZAHNRIEMEN | CORREA DENTADA |
| | 15 | | 0366540108A | 1.00 | COPERCHIO | COVER | COUVERCLE | DECKEL | TAPA |
| | 16 | | 0000309135L | 1.00 | VITE | SCREW | VIS | SCHRAUBE | TORNILLO |
| | 17 | | 0000305122G | 1.00 | ROSETTA | WASHER | RONDELLE | SCHEIBE | ARANDELA |
| | 18 | | 0566542529A | 1.00 | PULEGGIA | PULLEY | POULIE | RIEMENSCHEIBE | POLEA |
| | 19 | | 0000308121H | 1.00 | VITE | SCREW | VIS | SCHRAUBE | TORNILLO |
| | 20 | | 0721940231H | 2.00 | GIUNTO | JOINT | JOINT | KUPPLUNG | JUNTA |
| | 21 | | 0000645047A | 1.00 | LINGUETTA | FEATHER KEY | LANGUETTE | FEDERKEIL | LINGUETA |
| | 22 | | 0322740148D | 1.00 | BARRA L=153 | BAR | BARRE | STANGE | BARRA |
| | 22 | | 0322740166B | 1.00 | BARRA L=753 | BAR | BARRE | STANGE | BARRA |
| | 22 | | 0322741531G | 1.00 | BARRA (CLASS) L=416 | BAR | BARRE | STANGE | BARRA |

2866540109f

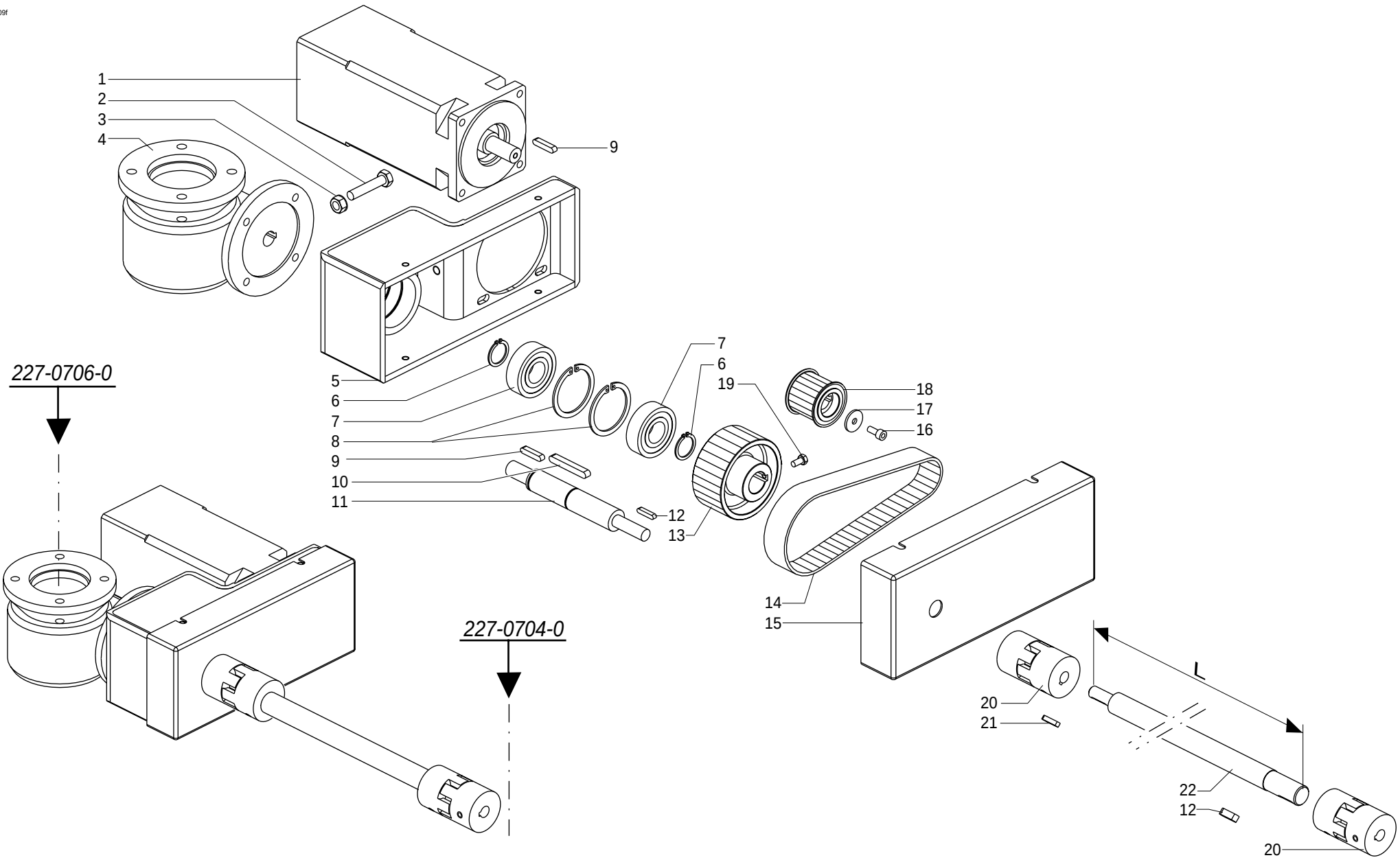


| | | | |
|---|---|---|---|
| scm | SUPERSET XL | SOLLEVAMENTO TRAVERSA (MOTORIZZAZIONE) - (01.01.1901 -> - p.20,06,2007)<br>TRAVERSE LIFTING (MOTORIZATION) - SOULEVEMENT TRAVERSE MOTORISATION<br>QUERTRAEGERHUB (MOTORISIERUNG) - ELEVACION TRAVESAÑO (MOTORIZACION) | 227-0703-X |

| scm | SUPERSET XL | SOLLEVAMENTO TRAVERSA (1 COLONNA) - (p.20,06,2007)<br>TRAVERSE LIFTING (1 ST COLUMN) - SOULEVEMENT TRAVERSE (1 ERE COLONNE)<br>QUERTRAEGERHUB (1 SAEULE) - ELEVACION TRAVESAÑO (1ºCOLUMNA) | 227-0704-0 |
|---|---|---|---|

| N | P | C | CODICE | Q.TY | DENOMINAZIONE | DESCRIPTION | DESIGNATION | BEZEICHNUNG | DENOMINACION |
|---|---|---|---|---|---|---|---|---|---|
| | 01.01.1901 -> 01.01.3000 | | | | Note: 2822740410C | | | | |
| | 1 | | 0321940224E | 2.00 | DISTANZIALE | SPACER | ENTRETOISE | DISTANZSTUECK | DISTANCIADOR |
| | 2 | | 0000613048D | 2.00 | GABBIA A RULLINI | ROLLER CAGE | CAGE A ROULEAUX | WALZENKAEFIG | COJINETE |
| | 3 | | 0000613050G | 4.00 | RALLA | WASHER | CRAPAUDINE | SCHEIBE | RANGUA |
| | 4 | | 0321940235H | 1.00 | FLANGIA | FLANGE | FLASQUE | FLANSCH | BRIDA |
| | 5 | | 0000301852B | 1.00 | GHIERA | RING NUT | EMBOUT | NUTMUTTER | COLLAR |
| | 6 | | 0000638175C | 1.00 | RIDUTTORE | REDUCING GEAR | REDUCTEUR | GETRIEBE | REDUCTOR |
| | 6 | | 0000640963H | 1.00 | RIDUTTORE | GEAR UNIT | REDUCTEUR | GETRIEBE | REDUCTOR |
| | 7 | | 0000308422G | 1.00 | VITE | SCREW | VIS | SCHRAUBE | TORNILLO |
| | 8 | | 0000305377H | 1.00 | ROSETTA | WASHER | RONDELLE | SCHEIBE | ARANDELA |
| | 9 | | 0322740135F | 1.00 | VITE | SCREW | VIS | SCHRAUBE | TORNILLO |
| | 9 | | 0322740147B | 1.00 | VITE | SCREW | VIS | SCHRAUBE | TORNILLO |
| | 9 | | 0322740422E | 1.00 | VITE | SCREW | VIS | SCHRAUBE | TORNILLO |
| | 9 | | 0322740423G | 1.00 | VITE | SCREW | VIS | SCHRAUBE | TORNILLO |
| | 10 | | 0322740142A | 1.00 | FLANGIA | FLANGE | FLASQUE | FLANSCH | BRIDA |
| | 11 | | 0000645018L | 1.00 | LINGUETTA | FEATHER KEY | LANGUETTE | FEDERKEIL | LINGUETA |

227-0704

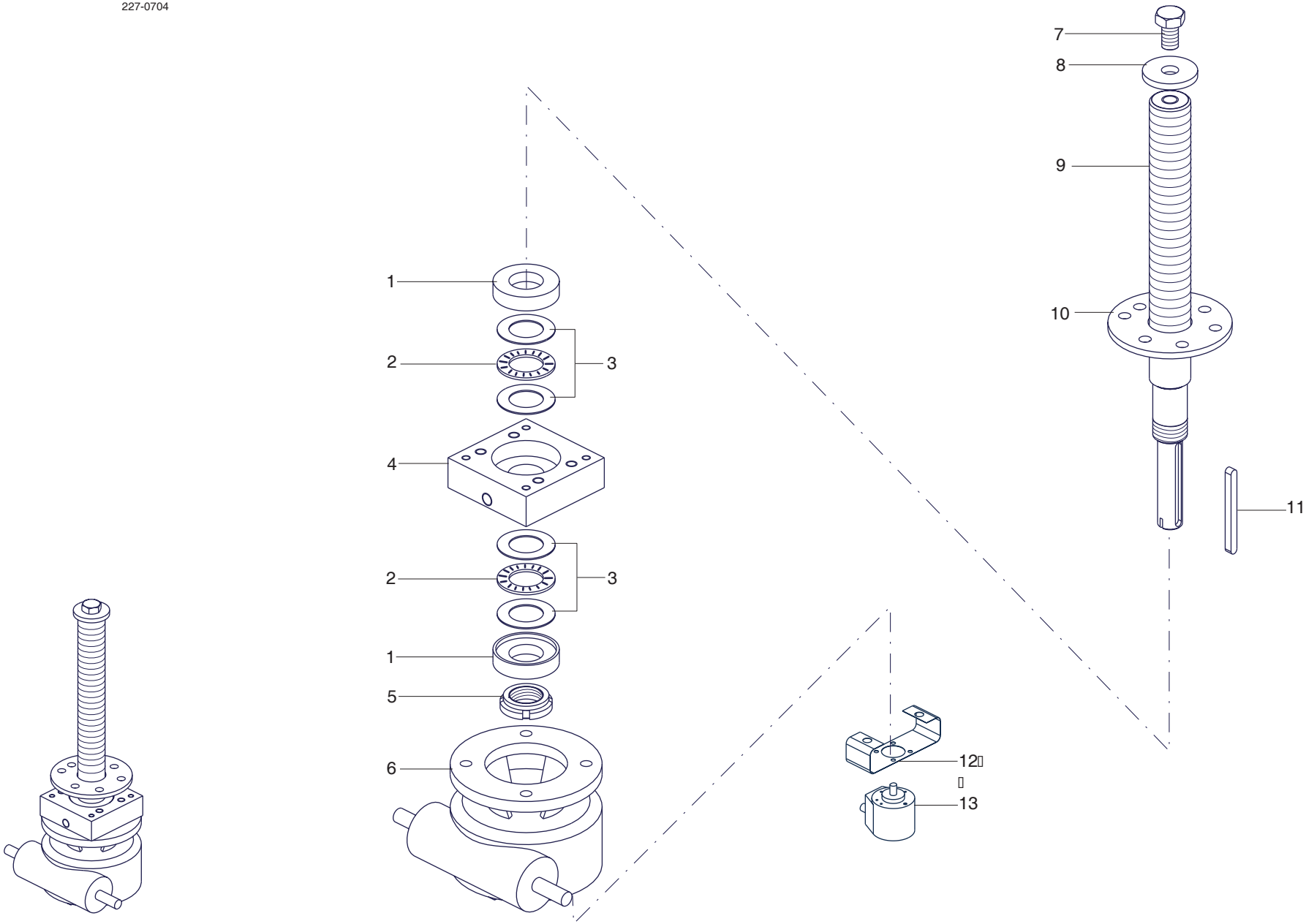


| | | | |
|---|---|---|---|
| scm | SUPERSET XL | SOLLEVAMENTO TRAVERSA (1 COLONNA) - (01.01.1901 -> - p.20,06,2007)<br>TRAVERSE LIFTING (1 ST COLUMN) - SOULEVEMENT TRAVERSE (1 ERE COLONNE)<br>QUERTRAEGERHUB (1 SAEULE) - ELEVACION TRAVESAÑO (1ºCOLUMNA) | 227-0704-0 |

| scm | SUPERSET XL | SOLLEVAMENTO TRAVERSA (1 ORIZZ.SUP.STD) - (p.20,06,2007)<br>TRAVERSE LIFTING (1 ST TOP HOR. SPINDLE) - SOULEVEMENT TRAVERSE (1 ARBRE HOR.SUP.)<br>QUERTRAEGERHUB (1 OBERE HOR. WELLE) - ELEVACION TRAVESAÑO (1ºHORIZ.SUP.STD) | 227-0705-0 |
|---|---|---|---|

| N | P | C | CODICE | Q.TY | DENOMINAZIONE | DESCRIPTION | DESIGNATION | BEZEICHNUNG | DENOMINACION |
|---|---|---|---|---|---|---|---|---|---|
| | 01.01.1901 -> 01.01.3000 | | | | Note: 2822740420D | | | | |
| | 1 | | 0321940224E | 2.00 | DISTANZIALE | SPACER | ENTRETOISE | DISTANZSTUECK | DISTANCIADOR |
| | 2 | | 0000613048D | 2.00 | GABBIA A RULLINI | ROLLER CAGE | CAGE A ROULEAUX | WALZENKAEFIG | COJINETE |
| | 3 | | 0000613050G | 4.00 | RALLA | WASHER | CRAPAUDINE | SCHEIBE | RANGUA |
| | 4 | | 0321940235H | 1.00 | FLANGIA | FLANGE | FLASQUE | FLANSCH | BRIDA |
| | 5 | | 0000301852B | 1.00 | GHIERA | RING NUT | EMBOUT | NUTMUTTER | COLLAR |
| | 6 | | 0000640963H | 1.00 | RIDUTTORE | GEAR UNIT | REDUCTEUR | GETRIEBE | REDUCTOR |
| | 7 | | 0000308422G | 1.00 | VITE | SCREW | VIS | SCHRAUBE | TORNILLO |
| | 8 | | 0000305377H | 1.00 | ROSETTA | WASHER | RONDELLE | SCHEIBE | ARANDELA |
| | 9 | | 0322740135F | 1.00 | VITE | SCREW | VIS | SCHRAUBE | TORNILLO |
| | 9 | | 0322740147B | 1.00 | VITE | SCREW | VIS | SCHRAUBE | TORNILLO |
| | 10 | | 0322740142A | 1.00 | FLANGIA | FLANGE | FLASQUE | FLANSCH | BRIDA |
| | 11 | | 0000645018L | 1.00 | LINGUETTA | FEATHER KEY | LANGUETTE | FEDERKEIL | LINGUETA |
| | 12 | | 0322740127L | 1.00 | SUPPORTO | SUPPORT | SUPPORT | STUETZE | SOPORTE |
| | 13 | | 0000637061L | 1.00 | RINVIO ANGOLARE | ANGULAR TRANSM. SHAFT | ARBRE RENVOI ANGULAIRE | WINKELUMLENKWELLE | REENV.ANG.X TR.FLEX. |
| | 14 | | 0722740136G | 1.00 | CAVO E GUAINA | CABLE | CABLE | KABEL | CABLE |
| | 15 | | 0000635255L | 1.00 | INDICATORE NUMERICO | POSITION INDICATOR | INDICATEUR DE POSITION | STELLUNGSANZEIGER | IND.POSIC. |
| | 15 | | 0000635264H | 1.00 | INDICATORE NUMERICO | POSITION INDICATOR | INDICATEUR DE POSITION | STELLUNGSANZEIGER | IND.POSIC. |
| | 16 | | 0322775014B | 1.00 | TARGA | PLATE | PLAQUE | SCHILD | TARJETA |

227-0705

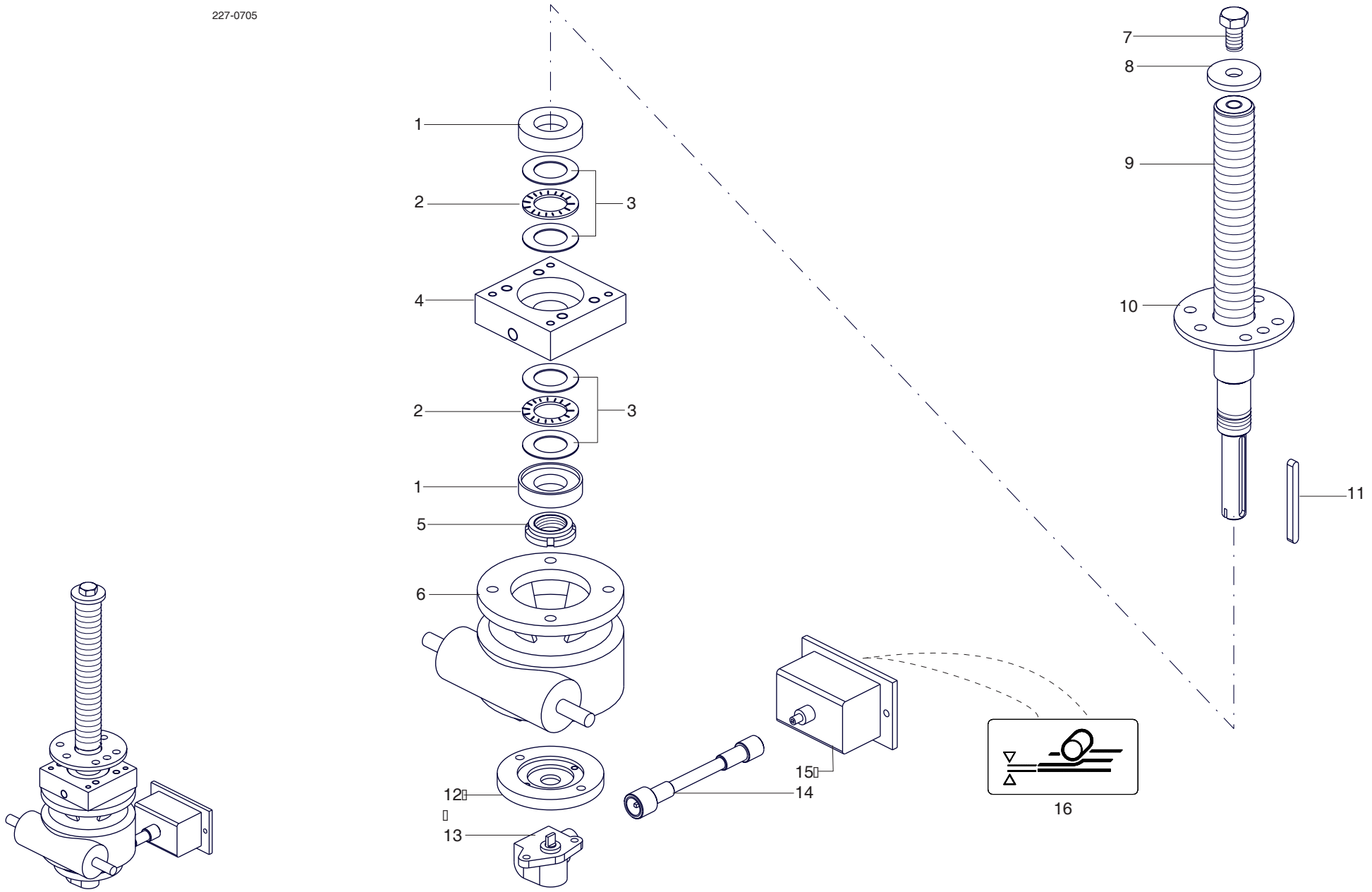


| | | | |
|---|---|---|---|
| scm | SUPERSET XL | SOLLEVAMENTO TRAVERSA (1 ORIZZ.SUP.STD) - (01.01.1901 -> - p.20,06,2007)<br>TRAVERSE LIFTING (1 ST TOP HOR. SPINDLE) - SOULEVEMENT TRAVERSE (1 ARBRE HOR.SUP.)<br>QUERTRAEGERHUB (1 OBERE HOR. WELLE) - ELEVACION TRAVESAÑO (1ºHORIZ.SUP.STD) | 227-0705-0 |

| scm | SUPERSET XL | SOLLEVAMENTO TRAVERSA (1 ORIZZ.SUP.CNC) - (p.20,06,2007)<br>TRAVERSE LIFT.(1 ST TOP HOR.SPINDLE CNC) - SOULEVEMENT TRAV.(1 ARBRE HOR.SUP.CNC)<br>QUERTRAEGERHUB (1 OBERE HOR. WELLE CNC) - ELEVACION TRAVESAÑO (1ºHORIZ.SUP.CNC) | 227-0706-0 |
|---|---|---|---|

| N | P | C | CODICE | Q.TY | DENOMINAZIONE | DESCRIPTION | DESIGNATION | BEZEICHNUNG | DENOMINACION |
|---|---|---|---|---|---|---|---|---|---|
| | 01.01.1901 -> 01.01.3000 | | | | Note: 2822740421F | | | | |
| | 1 | | 0321940224E | 2.00 | DISTANZIALE | SPACER | ENTRETOISE | DISTANZSTUECK | DISTANCIADOR |
| | 2 | | 0000613048D | 2.00 | GABBIA A RULLINI | ROLLER CAGE | CAGE A ROULEAUX | WALZENKAEFIG | COJINETE |
| | 3 | | 0000613050G | 4.00 | RALLA | WASHER | CRAPAUDINE | SCHEIBE | RANGUA |
| | 4 | | 0321940235H | 1.00 | FLANGIA | FLANGE | FLASQUE | FLANSCH | BRIDA |
| | 5 | | 0000301852B | 1.00 | GHIERA | RING NUT | EMBOUT | NUTMUTTER | COLLAR |
| | 6 | | 0000638175C | 1.00 | RIDUTTORE | REDUCING GEAR | REDUCTEUR | GETRIEBE | REDUCTOR |
| | 7 | | 0000308422G | 1.00 | VITE | SCREW | VIS | SCHRAUBE | TORNILLO |
| | 8 | | 0000305377H | 1.00 | ROSETTA | WASHER | RONDELLE | SCHEIBE | ARANDELA |
| | 9 | | 0322740422E | 1.00 | VITE | SCREW | VIS | SCHRAUBE | TORNILLO |
| | 9 | | 0322740423G | 1.00 | VITE | SCREW | VIS | SCHRAUBE | TORNILLO |
| | 10 | | 0322740142A | 1.00 | FLANGIA | FLANGE | FLASQUE | FLANSCH | BRIDA |
| | 11 | | 0000645018L | 1.00 | LINGUETTA | FEATHER KEY | LANGUETTE | FEDERKEIL | LINGUETA |
| | 12 | | 0321930112E | 1.00 | SUPPORTO | SUPPORT | SUPPORT | STUETZE | SOPORTE |
| | 13 | | 0733521168C | 1.00 | ASS.ENCODER 100IMP/G | ASS.ENCODER 100IMP/G | ASS.ENCODER 100IMP/G | ASS.ENCODER 100IMP/G | ASS.ENCODER 100IMP/G |
| | 13 | | 0739736140F | 1.00 | ENCODER | ENCODER | ENCODER | ENCODER | ENCODER |
| | 13 | | 0739736145G | 1.00 | ASS.ENCODER 300IMP/G | ASS.ENCODER 300IMP/G | ASS.ENCODER 300IMP/G | ASS.ENCODER 300IMP/G | ASS.ENCODER 300IMP/G |

227-0706

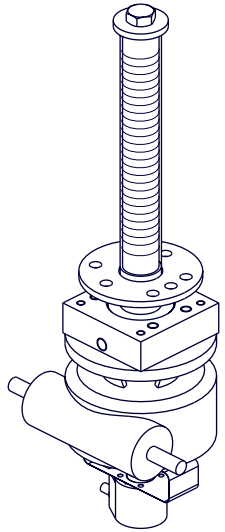

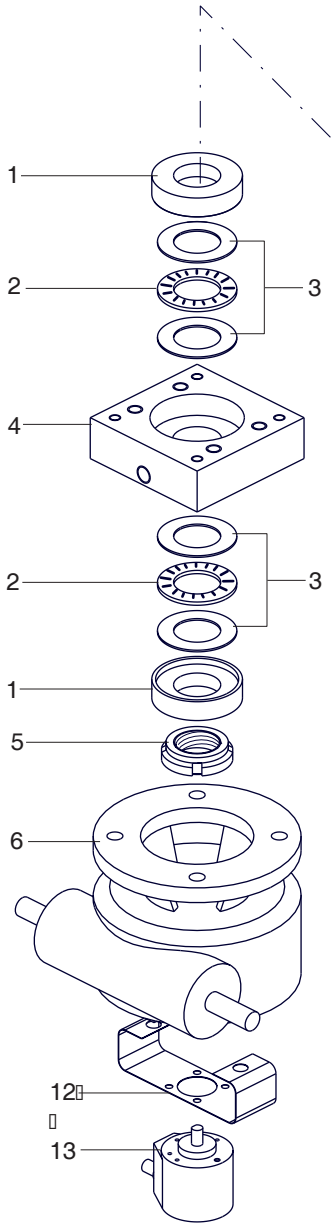


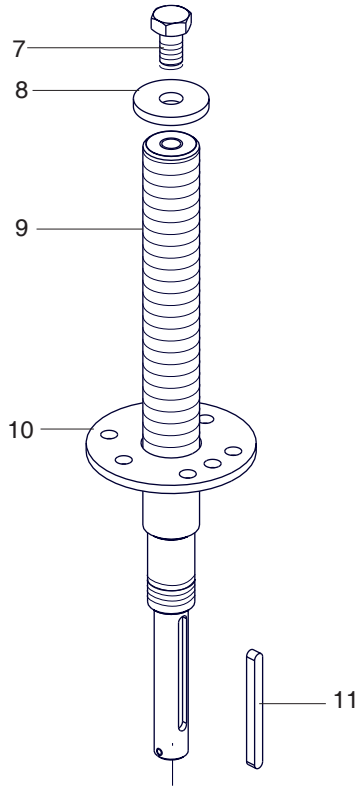


| | | | |
|---|---|---|---|
| scm | SUPERSET XL | SOLLEVAMENTO TRAVERSA (1 ORIZZ.SUP.CNC) - (01.01.1901 -> - p.20,06,2007)<br>TRAVERSE LIFT.(1 ST TOP HOR.SPINDLE CNC) - SOULEVEMENT TRAV.(1 ARBRE HOR.SUP.CNC)<br>QUERTRAEGERHUB (1 OBERE HOR. WELLE CNC) - ELEVACION TRAVESAÑO (1ºHORIZ.SUP.CNC) | 227-0706-0 |

| N | P | C | CODICE | Q.TY | DENOMINAZIONE | DESCRIPTION | DESIGNATION | BEZEICHNUNG | DENOMINACION |
|---|---|---|---|---|---|---|---|---|---|
| | 01.01.1901 -> 01.01.3000 | | | | Note: 2822740510E | | | | |
| | 1 | | 0522740116A | 1.00 | TRAVERSA | CROSS MEMBER | TRAVERSE | QUERBALKEN | PUENTE |
| | 1 | | 0522740801D | 1.00 | TRAVERSA | CROSS MEMBER | TRAVERSE | QUERBALKEN | PUENTE |
| | 1 | | 0522740850G | 1.00 | TRAVERSA | CROSS MEMBER | TRAVERSE | QUERBALKEN | PUENTE |
| | 1 | | 0522741501H | 1.00 | TRAVERSA (COMP.31) | CROSS MEMBER | TRAVERSE | QUERBALKEN | PUENTE |
| | 2 | | 0522740117C | 1.00 | COLONNA | COLUMN | COLONNE | STAENDER | COLUMNA |
| | 3 | | 0321940227B | 1.00 | MADREVITE | NUT SCREW | VIS-MERE | MUTTERGEWINDE | TUERCA |
| | 4 | | 0000645054E | 4.00 | LINGUETTA | FEATHER KEY | LANGUETTE | FEDERKEIL | LINGUETA |
| | 5 | | 0322740024A | 1.00 | BARRA L=358 | BAR | BARRE | STANGE | BARRA |
| | 6 | | 0721940593F | 2.00 | GIUNTO | JOINT | JOINT | KUPPLUNG | JUNTA |
| | 7 | | 0322740023H | 1.00 | BARRA L=325 | *TRAD MANCANTE* | *TRAD MANCANTE* | *TRAD MANCANTE* | *TRAD MANCANTE* |
| | 8 | | 0521940117C | 1.00 | BARRA | BAR | BARRE | STANGE | BARRA |
| | 9 | | 0519441208H | 2.00 | RULLO GOMMATO | ROLLER | ROULEAU | WALZE | RODILLO |
| | 10 | | 0319441202A | 1.00 | RUOTA | WHEEL | ROUE | RAD | RUEDA |
| | 10 | | 0322740047L | 1.00 | RULLO | ROLLER | ROULEAU | WALZE | RODILLO |
| | 11 | | 0322740812C | 1.00 | SUPPORTO | SUPPORT | SUPPORT | STUETZE | SOPORTE |
| | 12 | | 0001307353B | 1.00 | FINECORSA | LIMIT SWITCH | FIN DE COURSE | ENDSCHALTER | FIN CARRERA |
| | 13 | | 0322740819H | 1.00 | CARTER | COVER | CARTER | DECKEL | CARTER |
| | 14 | | 0322740048B | 1.00 | STAFFA | BRACKET | BRIDE | BUEGEL | ABRAZADERA |
| | 14 | | 0322740051G | 1.00 | STAFFA | BRACKET | BRIDE | BUEGEL | ABRAZADERA |
| | 15 | | 0001308647G | 2.00 | FINECORSA | MICROSWITCH | FIN DE COURSE | MIKROSCHALTER | FIN CARRERA |
| | 16 | | 0322740049D | 1.00 | STAFFA | BRACKET | BRIDE | BUEGEL | ABRAZADERA |
| | 17 | | 0322770217G | 1.00 | SUPPORTO | SUPPORT | SUPPORT | STUETZE | SOPORTE |
| | 18 | | 0522770218D | 1.00 | SUPPORTO | SUPPORT | SUPPORT | STUETZE | SOPORTE |
| | 19 | | 0310864701B | 1.00 | SUPPORTO | SUPPORT | SUPPORT | STUETZE | SOPORTE |
| | 20 | | 0319412905G | 1.00 | PIASTRINA | PLATE | PLAQUE | PLATTE | PLANCHA |
| | 21 | | 0322770216E | 1.00 | TUNNEL | TUNNEL | TUNNEL | TUNNEL | TUNEL |
| | 22 | | 0001347301A | 1.00 | FINECORSA | MICROSWITCH | FIN DE COURSE | MIKROSCHALTER | FIN CARRERA |
| | 23 | | 0001354448B | 1.00 | LEVA REG.+ROT. | ADJUST.LEVER W. WHEEL | LEVIER REGLABLE + ROUE | VERST.HEBEL MIT RAD | PALANC.+ REG. |
| | 24 | | 0319441226B | 1.00 | RULLO | ROLLER | ROULEAU | WALZE | RODILLO |
| | 25 | | 0321940538B | 1.00 | DISTANZIALE | SPACER | ENTRETOISE | DISTANZSTUECK | DISTANCIADOR |

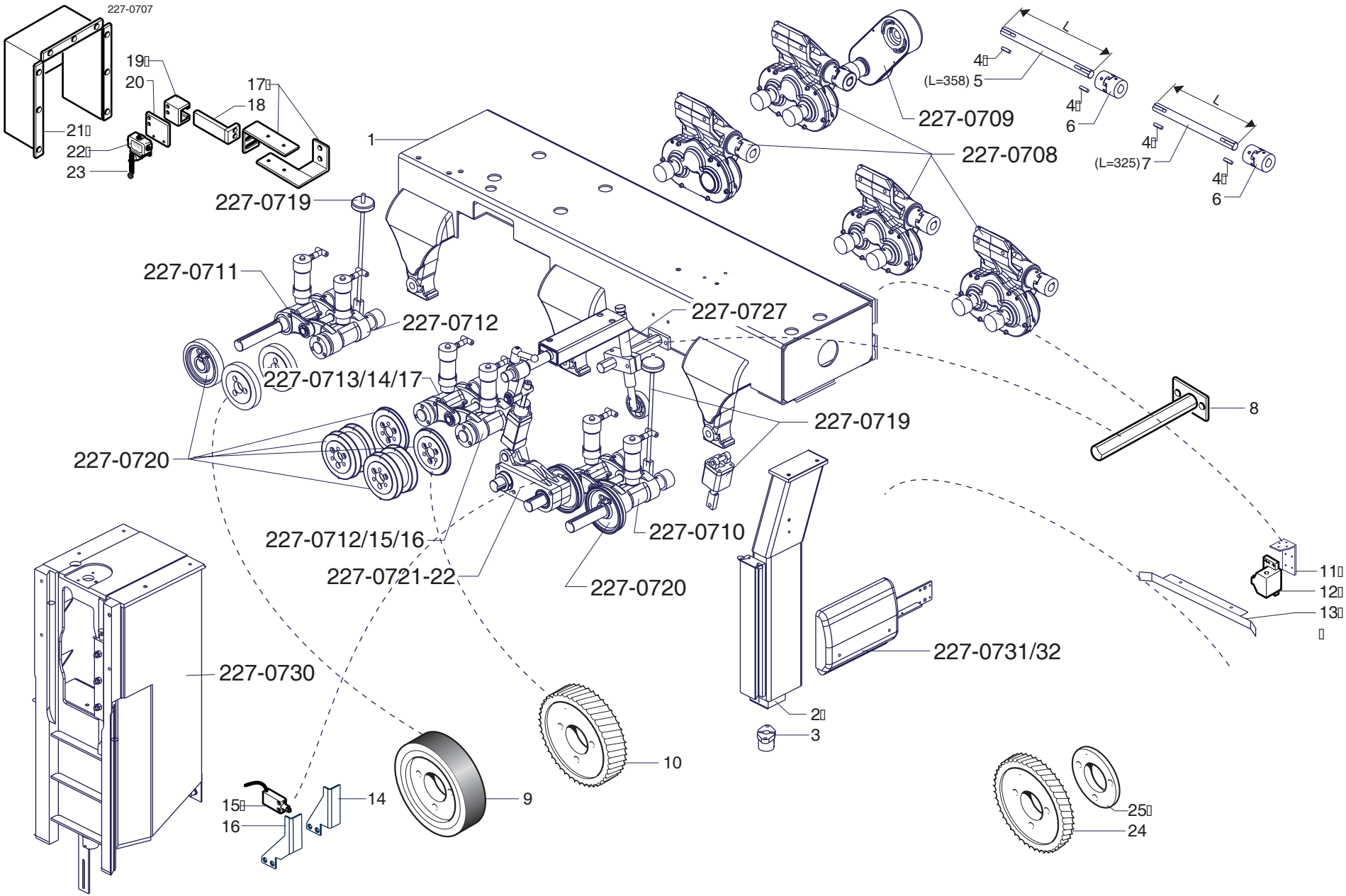


| scm | SUPERSET XL | TRAVERSA - TRAINO (1-5) - (01.01.1901 -> - p.20,06,2007)<br>TRAVERSE - FEED (1-5) - TRAVERSE - ENTRAINEMENT (1-5)<br>QUERTRAEGER - VORSCHUB (1-5) - PUENTE - ARRASTRE (1-5) | 227-0707-0 |
|---|---|---|---|

| N | P | C | CODICE | Q.TY | DENOMINAZIONE | DESCRIPTION | DESIGNATION | BEZEICHNUNG | DENOMINACION |
|---|---|---|---|---|---|---|---|---|---|
| | 01.01.1901 -> 01.01.3000 | | | | Note: 2822740610G | | | | |
| 1 | | | 0522740141C | 1.00 | TRAVERSA | CROSS MEMBER | TRAVERSE | QUERBALKEN | PUENTE |
| 1 | | | 0522740823A | 1.00 | TRAVERSA | CROSS MEMBER | TRAVERSE | QUERBALKEN | PUENTE |
| 2 | | | 0522740117C | 1.00 | COLONNA | COLUMN | COLONNE | STAENDER | COLUMNA |
| 3 | | | 0321940227B | 1.00 | MADREVITE | NUT SCREW | VIS-MERE | MUTTERGEWINDE | TUERCA |
| 4 | | | 0000645054E | 4.00 | LINGUETTA | FEATHER KEY | LANGUETTE | FEDERKEIL | LINGUETA |
| 5 | | | 0322740024A | 1.00 | BARRA L=358 | BAR | BARRE | STANGE | BARRA |
| 6 | | | 0721940593F | 2.00 | GIUNTO | JOINT | JOINT | KUPPLUNG | JUNTA |
| 7 | | | 0322740023H | 1.00 | BARRA L=325 | *TRAD MANCANTE* | *TRAD MANCANTE* | *TRAD MANCANTE* | *TRAD MANCANTE* |
| 8 | | | 0521940117C | 1.00 | BARRA | BAR | BARRE | STANGE | BARRA |
| 9 | | | 0519441208H | 2.00 | RULLO GOMMATO | ROLLER | ROULEAU | WALZE | RODILLO |
| 10 | | | 2722701001E | 1.00 | SCATOLA RIDUTTORE | GEAR BOX | BOITE REDUCTEUR | GETRIEBEKASTEN | CAJA REDUCTORA |
| 11 | | | 2722701002G | 1.00 | SCATOLA RIDUTTORE | GEAR BOX | BOITE REDUCTEUR | GETRIEBEKASTEN | CAJA REDUCTORA |
| 12 | | | 0319441202A | 1.00 | RUOTA | WHEEL | ROUE | RAD | RUEDA |
| 12 | | | 0322740047L | 1.00 | RULLO | ROLLER | ROULEAU | WALZE | RODILLO |
| 13 | | | 0322740812C | 1.00 | SUPPORTO | SUPPORT | SUPPORT | STUETZE | SOPORTE |
| 14 | | | 0001307353B | 1.00 | FINECORSA | LIMIT SWITCH | FIN DE COURSE | ENDSCHALTER | FIN CARRERA |
| 15 | | | 0322740819H | 1.00 | CARTER | COVER | CARTER | DECKEL | CARTER |
| 16 | | | 0322740048B | 1.00 | STAFFA | BRACKET | BRIDE | BUEGEL | ABRAZADERA |
| 17 | | | 0001308647G | 2.00 | FINECORSA | MICROSWITCH | FIN DE COURSE | MIKROSCHALTER | FIN CARRERA |
| 18 | | | 0322740049D | 1.00 | STAFFA | BRACKET | BRIDE | BUEGEL | ABRAZADERA |
| 19 | | | 0322770217G | 1.00 | SUPPORTO | SUPPORT | SUPPORT | STUETZE | SOPORTE |
| 20 | | | 0522770218D | 1.00 | SUPPORTO | SUPPORT | SUPPORT | STUETZE | SOPORTE |
| 21 | | | 0310864701B | 1.00 | SUPPORTO | SUPPORT | SUPPORT | STUETZE | SOPORTE |
| 22 | | | 0319412905G | 1.00 | PIASTRINA | PLATE | PLAQUE | PLATTE | PLANCHA |
| 23 | | | 0322770216E | 1.00 | TUNNEL | TUNNEL | TUNNEL | TUNNEL | TUNEL |
| 24 | | | 0001347301A | 1.00 | FINECORSA | MICROSWITCH | FIN DE COURSE | MIKROSCHALTER | FIN CARRERA |
| 25 | | | 0001354448B | 1.00 | LEVA REG.+ROT. | ADJUST.LEVER W. WHEEL | LEVIER REGLABLE + ROUE | VERST.HEBEL MIT RAD | PALANC.+ REG. |

22707075

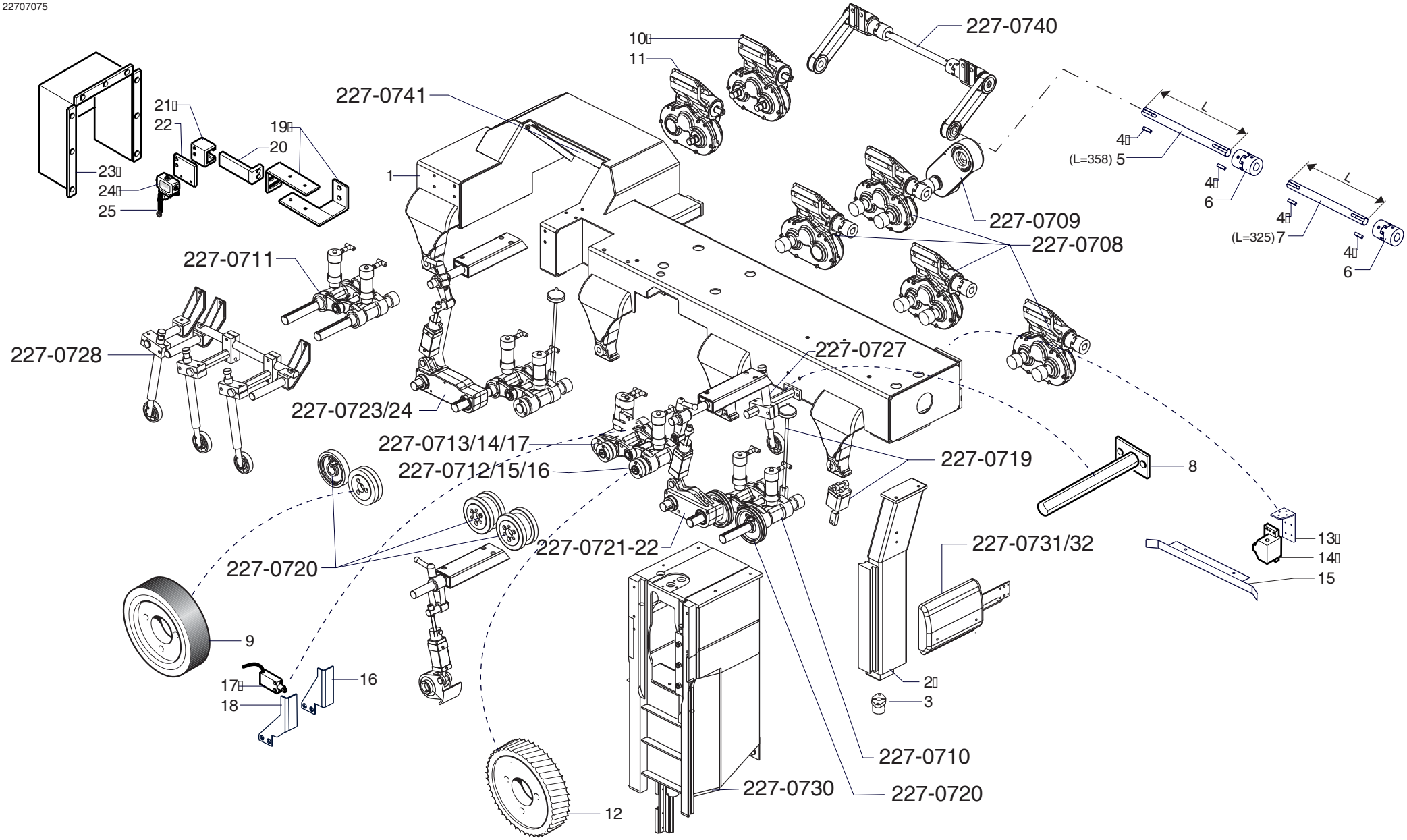


| scm | SUPERSET XL | TRAVERSA - TRAINO (2-6) - (01.01.1901 -> - p.20,06,2007)<br>TRAVERSE - FEED (2-6) - TRAVERSE - ENTRAINEMENT (2-6)<br>QUERTRAEGER - VORSCHUB (2-6) - PUENTE - ARRASTRE (2-6) | 227-0707-5 |
|---|---|---|---|

| scm | SUPERSET XL | SCATOLA TRASMISSIONE - (p.20,06,2007)<br>GEAR BOX - BOITE TRANSMISSION<br>GETRIEBE - CAJA TRANSMISION | 227-0708-0 |
|---|---|---|---|

| N | P | C | CODICE | Q.TY | DENOMINAZIONE | DESCRIPTION | DESIGNATION | BEZEICHNUNG | DENOMINACION |
|---|---|---|---|---|---|---|---|---|---|
| | 01.01.1901 -> 01.01.3000 | | | | Note: 2822740200G | | | | |
| | 1 | | 2722701005D | 1.00 | SCATOLA RIDUTTORE | GEAR BOX | BOITE REDUCTEUR | GETRIEBEKASTEN | CAJA REDUCTORA |
| | 2 | | 2722701000C | 1.00 | SCATOLA RIDUTTORE | GEAR BOX | BOITE REDUCTEUR | GETRIEBEKASTEN | CAJA REDUCTORA |
| | 3 | | 2722701001E | 1.00 | SCATOLA RIDUTTORE | GEAR BOX | BOITE REDUCTEUR | GETRIEBEKASTEN | CAJA REDUCTORA |
| | 4 | | 0721940593F | 1.00 | GIUNTO | JOINT | JOINT | KUPPLUNG | JUNTA |
| | 5 | | 2722701003L | 1.00 | SCATOLA RIDUTTORE | GEAR BOX | BOITE REDUCTEUR | GETRIEBEKASTEN | CAJA REDUCTORA |

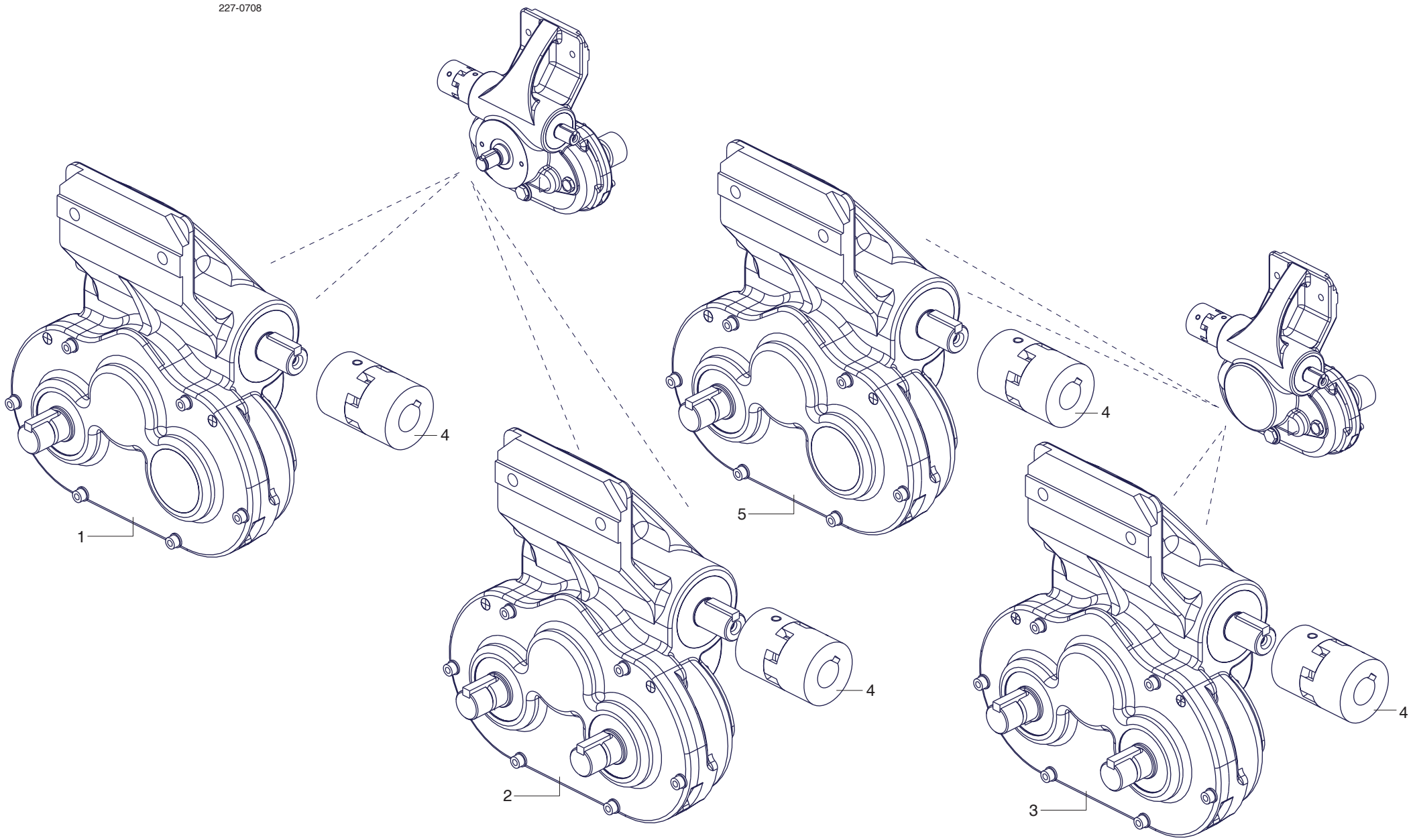


scm

**SUPERSET XL**

**SCATOLA TRASMISSIONE - (01.01.1901 ->  - p.20,06,2007)**
**GEAR BOX - BOITE TRANSMISSION**
**GETRIEBE - CAJA TRANSMISION**

**227-0708-0**

| scm | SUPERSET XL | TRASMISSIONE MOTO AI RULLI SUL PIANO - (p.20,06,2007)<br>DRIVE TO ROLLES ON THE TABLE - TANSMISSION AUX ROULEAUX SUR LA TABLE<br>ANTRIEB AN WALZEN AUF DEM TISCH - TRANSMISION MOV A RODILLOS EN LA MESA | 227-0709-0 |
|---|---|---|---|

| N | P | C | CODICE | Q.TY | DENOMINAZIONE | DESCRIPTION | DESIGNATION | BEZEICHNUNG | DENOMINACION |
|---|---|---|---|---|---|---|---|---|---|
| | 01.01.1901 -> 01.01.3000 | | | | Note: 2822740340D | | | | |
| | 1 | | 0000644268H | 2.00 | ANELLO SEEGER | CIRCLIP | CIRCLIP | SEEGERRING | SEEGER |
| | 2 | | 0000606244A | 2.00 | CUSCINETTO | BEARING | ROULEMENT | LAGER | COJINETE |
| | 3 | | 0000644043A | 2.00 | ANELLO SEEGER | CIRCLIP | CIRCLIP | SEEGERRING | SEEGER |
| | 4 | | 0522740033D | 1.00 | SUPPORTO | SUPPORT | SUPPORT | STUETZE | SOPORTE |
| | 5 | | 0000602186C | 1.00 | CATENA | CHAIN | CHAINE | KETTE | CADENA |
| | 6 | | 0722740030B | 1.00 | PIGNONE | SPROCKET | PIGNON | RITZEL | PIÑON |
| | 7 | | 0000644272F | 1.00 | ANELLO | RING | BAGUE | RING | ANILLO |
| | 8 | | 0522740031L | 1.00 | PIGNONE | SPROCKET | PIGNON | RITZEL | PIÑON |
| | 9 | | 0322740034B | 1.00 | COPERCHIO | COVER | COUVERCLE | DECKEL | TAPA |

227-0709

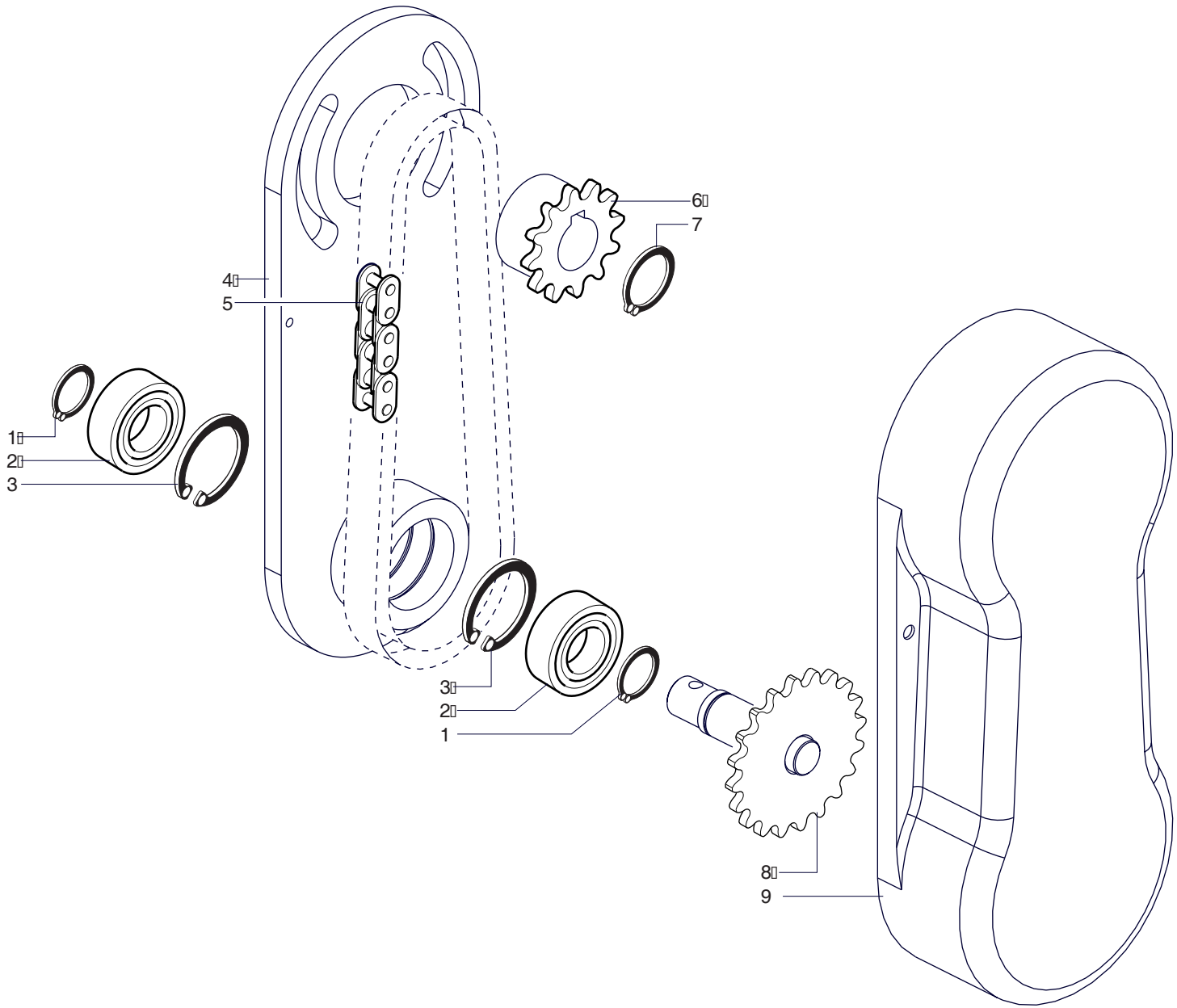


| | | | |
|---|---|---|---|
| scm | SUPERSET XL | TRASMISSIONE MOTO AI RULLI SUL PIANO - (01.01.1901 -> - p.20,06,2007)<br>DRIVE TO ROLLES ON THE TABLE - TANSMISSION AUX ROULEAUX SUR LA TABLE<br>ANTRIEB AN WALZEN AUF DEM TISCH - TRANSMISION MOV A RODILLOS EN LA MESA | 227-0709-0 |

| scm | SUPERSET XL | FORCELLA DX PER RULLI DI TRAINO STD - (p.20,06,2007)<br>RIGHT FORK FOR FEED ROLLERS (STANDARD) - FOURCHE DROITE (ROULEAUX STANDARD)<br>RECHTE GABEL FEUR DURCHZUGWALZEN - HORQUILLA DX PARA RODILLOS DE ARRASTRE | 227-0710-0 |
|---|---|---|---|

| N | P | C | CODICE | Q.TY | DENOMINAZIONE | DESCRIPTION | DESIGNATION | BEZEICHNUNG | DENOMINACION |
|---|---|---|---|---|---|---|---|---|---|
| | 01.01.1901 -> 01.01.3000 | | | | Note: 2822740040G | | | | |
| | 1 | | 0311140041F | 1.00 | ALBERO (L=220) | SHAFT (L=220) | ARBRE (L=220) | WELLE (L=220) | EJE (L=220) |
| | 1 | | 0322740011C | 1.00 | ALBERO (L=160) | SHAFT (L=160) | ARBRE (L=160) | WELLE (L=160) | EJE (L=160) |
| | 2 | | 0000645054E | 1.00 | LINGUETTA | FEATHER KEY | LANGUETTE | FEDERKEIL | LINGUETA |
| | 3 | | 0000601013E | 2.00 | BOCCOLA | BUSHING | DOUILLE | BUCHSE | CASQUILLO |
| | 3 | | 0000601248D | 2.00 | BOCCOLA | BUSHING | DOUILLE | BUCHSE | CASQUILLO |
| | 4 | | 0000606102L | 2.00 | CUSCINETTO | BEARING | ROULEMENT | LAGER | COJINETE |
| | 5 | | 0000617477H | 1.00 | ANELLO | RING | BAGUE | RING | ANILLO |
| | 6 | | 0322740010A | 1.00 | FORCELLA | FORK | FOURCHE | GABEL | HORQUILLA |
| | 7 | | 0000644278L | 1.00 | ANELLO SEEGER | CIRCLIP | CIRCLIP | SEEGERRING | SEEGER |
| | 8 | | 0722740014H | 1.00 | GIUNTO CARDANICO | UNIVERSAL JOINT | JOINT A CARDAN | KARDANGELENK | ARTICULACION CARDANICA |
| | 8 | | 0722740061G | 1.00 | GIUNTO CARDANICO | UNIVERSAL JOINT | JOINT A CARDAN | KARDANGELENK | ARTICULACION CARDANICA |
| | 9 | | 0001904525A | 1.00 | RACCORDO | FITTING | RACCORD | ANSCHLUSS | CONEXION |
| | 10 | | 0001904160E | 1.00 | RACCORDO | FITTING | RACCORD | ANSCHLUSS | CONEXION |
| | 11 | | 0001908001C | 1.00 | RIDUZ.ES.ALT | REDUCING PIECE (THICK) MF | PIECE RED. HEX.EPAIS | REDUZIERSTUECK | RED.MH EX.ALTO |
| | 12 | | 0721940544C | 1.00 | CILINDRO PNEUMATICO | PNEUMATIC CYLINDER | CYLINDRE PNEUMATIQUE | PNEUMATIKZYLINDER | CILINDRO NEUMATICO |
| | 13 | | 0322740018H | 1.00 | ALBERO FLANGIATO | SHAFT | ARBRE | WELLE | EJE |
| | 14 | | 0522740046B | 1.00 | FORCELLA | FORK | FOURCHE | GABEL | HORQUILLA |

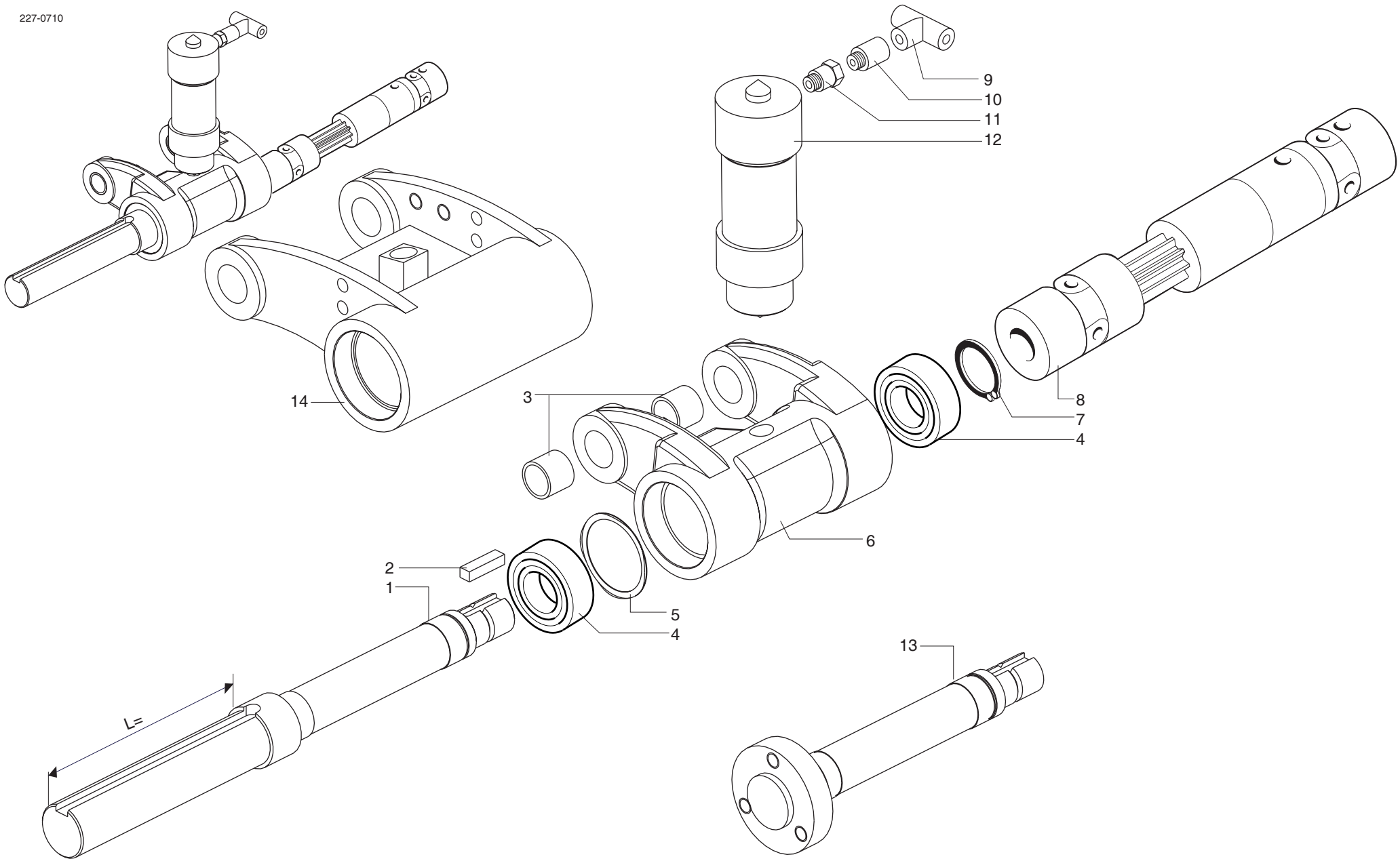


| scm | SUPERSET XL | FORCELLA DX PER RULLI DI TRAINO STD - (01.01.1901 -> - p.20,06,2007)<br>RIGHT FORK FOR FEED ROLLERS (STANDARD) - FOURCHE DROITE (ROULEAUX STANDARD)<br>RECHTE GABEL FEUR DURCHZUGWALZEN - HORQUILLA DX PARA RODILLOS DE ARRASTRE | 227-0710-0 |
|---|---|---|---|

| scm | SUPERSET XL | FORCELLA SX PER RULLI DI TRAINO STD - (p.20,06,2007)<br>LEFT FORK FOR FEED ROLLERS (STANDARD) - FOURCHE GAUCHE (ROLLEAUX STANDARD)<br>LINKF GABEL FEUR DURCHZUGWALZEN - HORQUILLA SX PARA RODILLOS DE ARRASTRE | 227-0711-0 |
|---|---|---|---|

| N | P | C | CODICE | Q.TY | DENOMINAZIONE | DESCRIPTION | DESIGNATION | BEZEICHNUNG | DENOMINACION |
|---|---|---|---|---|---|---|---|---|---|
| | 01.01.1901 -> 01.01.3000 | | | | Note: 2822740050H | | | | |
| | 1 | | 0311140041F | 1.00 | ALBERO (L=220) | SHAFT (L=220) | ARBRE (L=220) | WELLE (L=220) | EJE (L=220) |
| | 1 | | 0322740011C | 1.00 | ALBERO (L=160) | SHAFT (L=160) | ARBRE (L=160) | WELLE (L=160) | EJE (L=160) |
| | 2 | | 0000645054E | 1.00 | LINGUETTA | FEATHER KEY | LANGUETTE | FEDERKEIL | LINGUETA |
| | 3 | | 0000601013E | 2.00 | BOCCOLA | BUSHING | DOUILLE | BUCHSE | CASQUILLO |
| | 3 | | 0000601248D | 2.00 | BOCCOLA | BUSHING | DOUILLE | BUCHSE | CASQUILLO |
| | 4 | | 0000606102L | 2.00 | CUSCINETTO | BEARING | ROULEMENT | LAGER | COJINETE |
| | 5 | | 0000617477H | 1.00 | ANELLO | RING | BAGUE | RING | ANILLO |
| | 6 | | 0322740010A | 1.00 | FORCELLA | FORK | FOURCHE | GABEL | HORQUILLA |
| | 7 | | 0000644278L | 1.00 | ANELLO SEEGER | CIRCLIP | CIRCLIP | SEEGERRING | SEEGER |
| | 8 | | 0722740014H | 1.00 | GIUNTO CARDANICO | UNIVERSAL JOINT | JOINT A CARDAN | KARDANGELENK | ARTICULACION CARDANICA |
| | 8 | | 0722740061G | 1.00 | GIUNTO CARDANICO | UNIVERSAL JOINT | JOINT A CARDAN | KARDANGELENK | ARTICULACION CARDANICA |
| | 9 | | 0001904525A | 1.00 | RACCORDO | FITTING | RACCORD | ANSCHLUSS | CONEXION |
| | 10 | | 0001904160E | 1.00 | RACCORDO | FITTING | RACCORD | ANSCHLUSS | CONEXION |
| | 11 | | 0001908001C | 1.00 | RIDUZ.ES.ALT | REDUCING PIECE (THICK) MF | PIECE RED. HEX.EPAIS | REDUZIERSTUECK | RED.MH EX.ALTO |
| | 12 | | 0721940544C | 1.00 | CILINDRO PNEUMATICO | PNEUMATIC CYLINDER | CYLINDRE PNEUMATIQUE | PNEUMATIKZYLINDER | CILINDRO NEUMATICO |
| | 13 | | 0322740012E | 1.00 | ALBERO | SHAFT | ARBRE | WELLE | EJE |
| | 14 | | 0000613086D | 1.00 | RALLA | BEARING | CRAPAUDINE | SCHEIBE | RANGUA |
| | 15 | | 0000644268H | 1.00 | ANELLO SEEGER | CIRCLIP | CIRCLIP | SEEGERRING | SEEGER |
| | 16 | | 0522740046B | 1.00 | FORCELLA | FORK | FOURCHE | GABEL | HORQUILLA |

227-0711

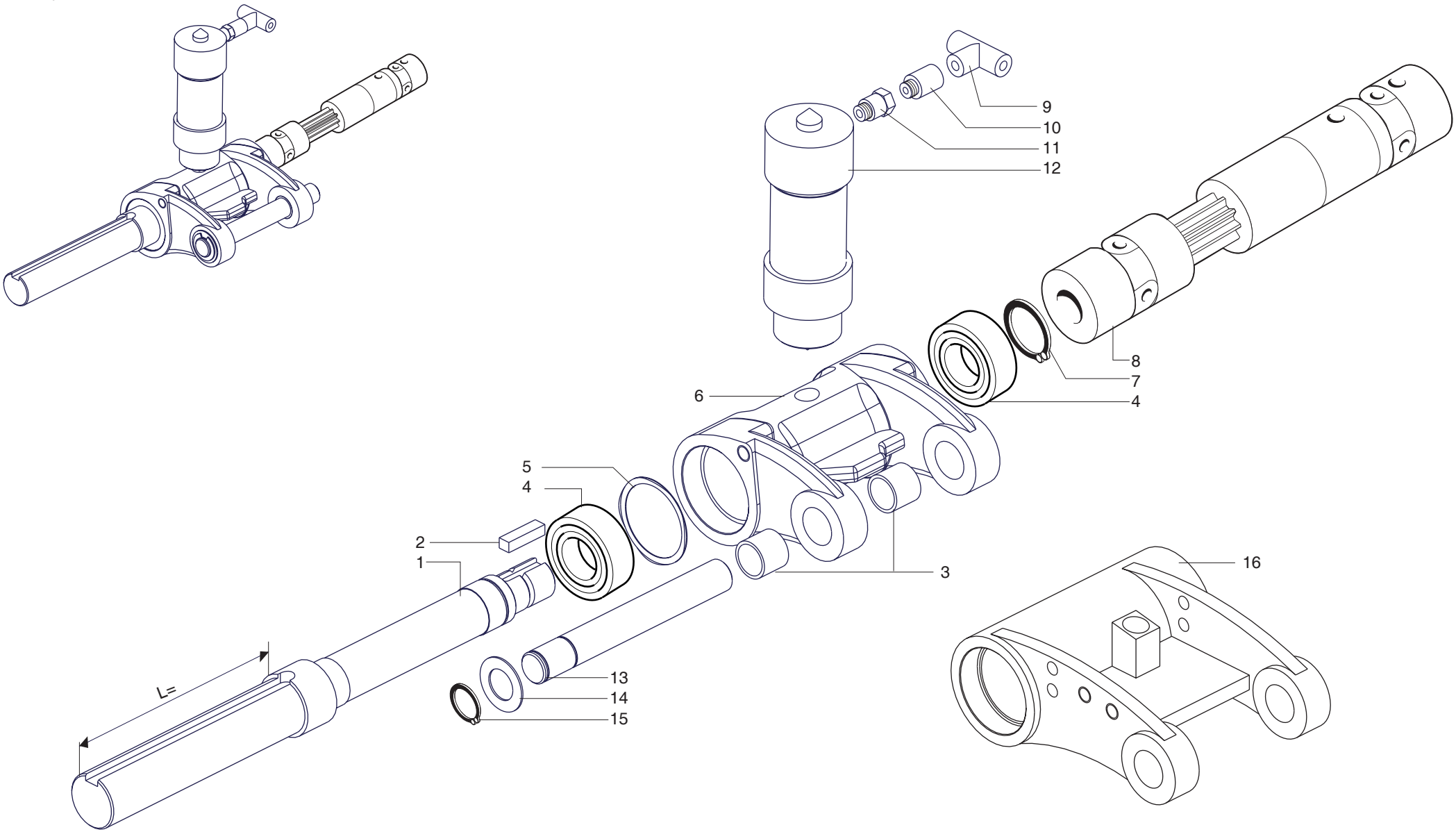


| | | | |
|---|---|---|---|
| scm | SUPERSET XL | FORCELLA SX PER RULLI DI TRAINO STD - (01.01.1901 -> - p.20,06,2007)<br>LEFT FORK FOR FEED ROLLERS (STANDARD) - FOURCHE GAUCHE (ROLLEAUX STANDARD)<br>LINKF GABEL FEUR DURCHZUGWALZEN - HORQUILLA SX PARA RODILLOS DE ARRASTRE | 227-0711-0 |

| scm | SUPERSET XL | FORCELLA DX PER R. DI TRAINO (FLANGIATA) - (p.20,06,2007)<br>RIGHT FORK FOR FEED ROLLERS (FLANGED) - FOURCHE DROITE ROULEAUX A BRIDE)<br>RECHTE FLANSCHGABEL (DURCHZUGWALZEN) - HORQUILLA DX PARA R. DE ARRASTRE ANILLOS | 227-0712-0 |
|---|---|---|---|

| N | P | C | CODICE | Q.TY | DENOMINAZIONE | DESCRIPTION | DESIGNATION | BEZEICHNUNG | DENOMINACION |
|---|---|---|---|---|---|---|---|---|---|
| | 01.01.1901 -> 01.01.3000 | | | | Note: 2822740060L | | | | |
| | 1 | | 0322740018H | 1.00 | ALBERO FLANGIATO | SHAFT | ARBRE | WELLE | EJE |
| | 1 | | 0322740901B | 1.00 | ALBERO FLANGIATO (SPEC) | SHAFT | ARBRE | WELLE | EJE |
| | 2 | | 0000645054E | 1.00 | LINGUETTA | FEATHER KEY | LANGUETTE | FEDERKEIL | LINGUETA |
| | 3 | | 0000601013E | 2.00 | BOCCOLA | BUSHING | DOUILLE | BUCHSE | CASQUILLO |
| | 3 | | 0000601248D | 2.00 | BOCCOLA | BUSHING | DOUILLE | BUCHSE | CASQUILLO |
| | 4 | | 0000606102L | 2.00 | CUSCINETTO | BEARING | ROULEMENT | LAGER | COJINETE |
| | 5 | | 0000617477H | 1.00 | ANELLO | RING | BAGUE | RING | ANILLO |
| | 6 | | 0322740010A | 1.00 | FORCELLA | FORK | FOURCHE | GABEL | HORQUILLA |
| | 7 | | 0000644278L | 1.00 | ANELLO SEEGER | CIRCLIP | CIRCLIP | SEEGERRING | SEEGER |
| | 8 | | 0722740014H | 1.00 | GIUNTO CARDANICO | UNIVERSAL JOINT | JOINT A CARDAN | KARDANGELENK | ARTICULACION CARDANICA |
| | 8 | | 0722740061G | 1.00 | GIUNTO CARDANICO | UNIVERSAL JOINT | JOINT A CARDAN | KARDANGELENK | ARTICULACION CARDANICA |
| | 9 | | 0001904525A | 1.00 | RACCORDO | FITTING | RACCORD | ANSCHLUSS | CONEXION |
| | 10 | | 0001904160E | 1.00 | RACCORDO | FITTING | RACCORD | ANSCHLUSS | CONEXION |
| | 11 | | 0001908001C | 1.00 | RIDUZ.ES.ALT | REDUCING PIECE (THICK) MF | PIECE RED. HEX.EPAIS | REDUZIERSTUECK | RED.MH EX.ALTO |
| | 12 | | 0721940544C | 1.00 | CILINDRO PNEUMATICO | PNEUMATIC CYLINDER | CYLINDRE PNEUMATIQUE | PNEUMATIKZYLINDER | CILINDRO NEUMATICO |
| | 13 | | 0319442923B | 1.00 | DISTANZIALE | SPACER | ENTRETOISE | DISTANZSTUECK | DISTANCIADOR |
| | 13 | | 0322740902D | 1.00 | FLANGIA (SPEC) | FLANGE | FLASQUE | FLANSCH | BRIDA |

227-0712

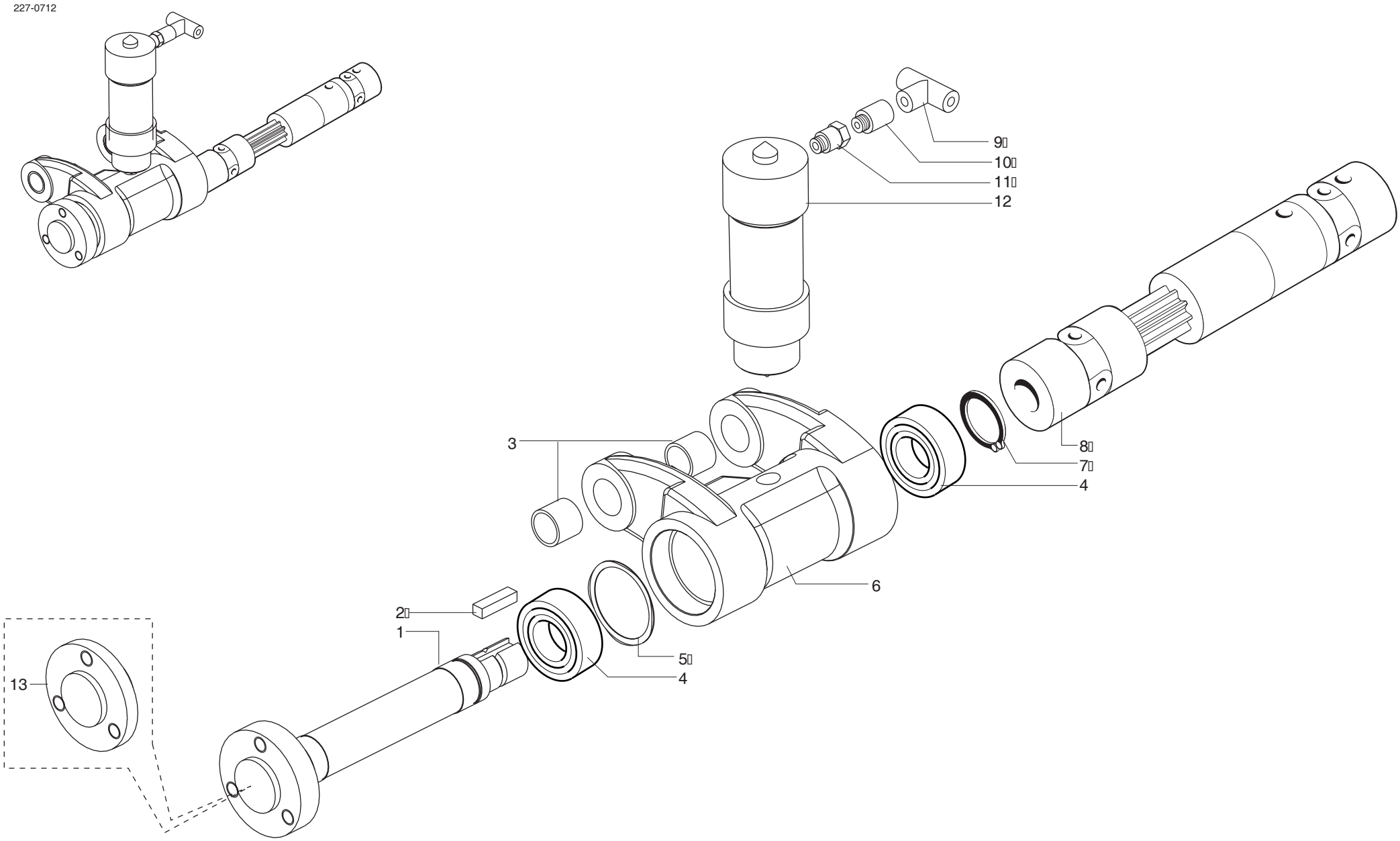


| | | | |
|---|---|---|---|
| scm | SUPERSET XL | FORCELLA DX PER R. DI TRAINO (FLANGIATA) - (01.01.1901 -> - p.20,06,2007)<br>RIGHT FORK FOR FEED ROLLERS (FLANGED) - FOURCHE DROITE ROULEAUX A BRIDE)<br>RECHTE FLANSCHGABEL (DURCHZUGWALZEN) - HORQUILLA DX PARA R. DE ARRASTRE ANILLOS | 227-0712-0 |

| scm | SUPERSET XL | FORCELLA SX PER R. DI TRAINO (FLANGIATA) - (p.20,06,2007)<br>LEFT FORK FOR FEED ROLLERS (FLANGED) - FOURCHE GAUCHE ROULEAUX (A BRIDE)<br>LINKE FLANSCHGABEL (DURCHZUGWALZEN) - HORQUILLA SX PARA R. DE ARRASTRE ANILLOS | 227-0713-0 |
|---|---|---|---|

| N | P | C | CODICE | Q.TY | DENOMINAZIONE | DESCRIPTION | DESIGNATION | BEZEICHNUNG | DENOMINACION |
|---|---|---|---|---|---|---|---|---|---|
| | 01.01.1901 -> 01.01.3000 | | | | Note: 2822740070A | | | | |
| | 1 | | 0322740018H | 1.00 | ALBERO FLANGIATO | SHAFT | ARBRE | WELLE | EJE |
| | 1 | | 0322740901B | 1.00 | ALBERO FLANGIATO (SPEC) | SHAFT | ARBRE | WELLE | EJE |
| | 2 | | 0000645054E | 1.00 | LINGUETTA | FEATHER KEY | LANGUETTE | FEDERKEIL | LINGUETA |
| | 3 | | 0000601013E | 2.00 | BOCCOLA | BUSHING | DOUILLE | BUCHSE | CASQUILLO |
| | 3 | | 0000601248D | 1.00 | BOCCOLA | BUSHING | DOUILLE | BUCHSE | CASQUILLO |
| | 4 | | 0000606102L | 2.00 | CUSCINETTO | BEARING | ROULEMENT | LAGER | COJINETE |
| | 5 | | 0000617477H | 1.00 | ANELLO | RING | BAGUE | RING | ANILLO |
| | 6 | | 0322740010A | 1.00 | FORCELLA | FORK | FOURCHE | GABEL | HORQUILLA |
| | 7 | | 0000644278L | 1.00 | ANELLO SEEGER | CIRCLIP | CIRCLIP | SEEGERRING | SEEGER |
| | 8 | | 0722740014H | 1.00 | GIUNTO CARDANICO | UNIVERSAL JOINT | JOINT A CARDAN | KARDANGELENK | ARTICULACION CARDANICA |
| | 8 | | 0722740061G | 1.00 | GIUNTO CARDANICO | UNIVERSAL JOINT | JOINT A CARDAN | KARDANGELENK | ARTICULACION CARDANICA |
| | 9 | | 0001904525A | 1.00 | RACCORDO | FITTING | RACCORD | ANSCHLUSS | CONEXION |
| | 10 | | 0001904160E | 1.00 | RACCORDO | FITTING | RACCORD | ANSCHLUSS | CONEXION |
| | 11 | | 0001908001C | 1.00 | RIDUZ.ES.ALT | REDUCING PIECE (THICK) MF | PIECE RED. HEX.EPAIS | REDUZIERSTUECK | RED.MH EX.ALTO |
| | 12 | | 0721940544C | 1.00 | CILINDRO PNEUMATICO | PNEUMATIC CYLINDER | CYLINDRE PNEUMATIQUE | PNEUMATIKZYLINDER | CILINDRO NEUMATICO |
| | 13 | | 0322740012E | 1.00 | ALBERO | SHAFT | ARBRE | WELLE | EJE |
| | 14 | | 0000613086D | 1.00 | RALLA | BEARING | CRAPAUDINE | SCHEIBE | RANGUA |
| | 15 | | 0000644268H | 1.00 | ANELLO SEEGER | CIRCLIP | CIRCLIP | SEEGERRING | SEEGER |
| | 16 | | 0319442923B | 1.00 | DISTANZIALE | SPACER | ENTRETOISE | DISTANZSTUECK | DISTANCIADOR |
| | 16 | | 0322740902D | 1.00 | FLANGIA (SPEC) | FLANGE | FLASQUE | FLANSCH | BRIDA |

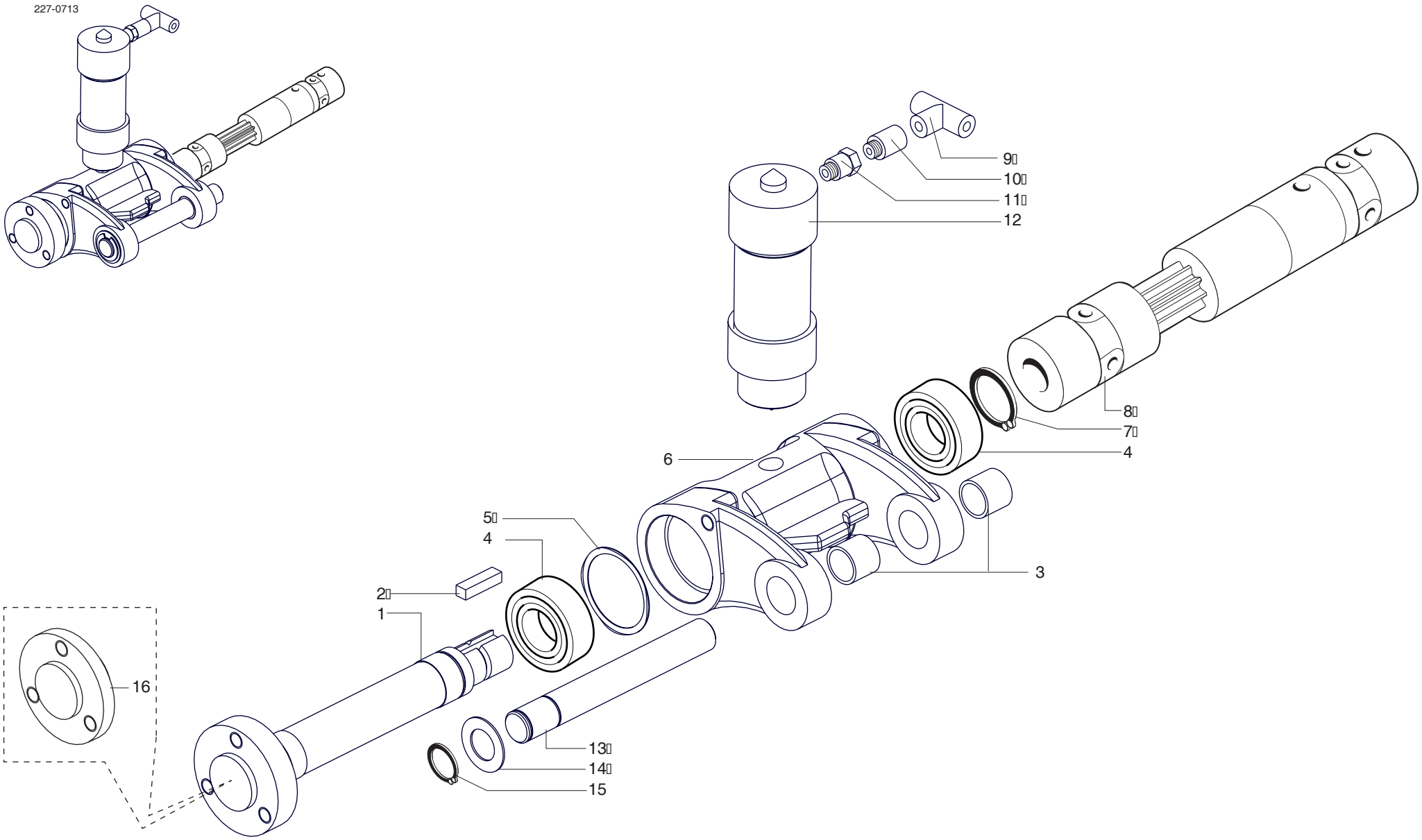


| | | | |
|---|---|---|---|
| scm | SUPERSET XL | FORCELLA SX PER R. DI TRAINO (FLANGIATA) - (01.01.1901 -> - p.20,06,2007)<br>LEFT FORK FOR FEED ROLLERS (FLANGED) - FOURCHE GAUCHE ROULEAUX (A BRIDE)<br>LINKE FLANSCHGABEL (DURCHZUGWALZEN) - HORQUILLA SX PARA R. DE ARRASTRE ANILLOS | 227-0713-0 |

| scm | SUPERSET XL | FORCELLA FLANG. LUNGA SX - (p.20,06,2007)<br>LONG FLANGED FORK (LEFT) - FOURCHE A BRIDE LONGUE (GAUCHE)<br>LANGE FLANSCHGABEL (LINK) - HORQUILLA ANILLOS LARGA IZQUIERDA | 227-0714-0 |
|---|---|---|---|

| N | P | C | CODICE | Q.TY | DENOMINAZIONE | DESCRIPTION | DESIGNATION | BEZEICHNUNG | DENOMINACION |
|---|---|---|---|---|---|---|---|---|---|
| | 01.01.1901 -> 01.01.3000 | | | | Note: 2822740044F | | | | |
| | 1 | | 0322740018H | 1.00 | ALBERO FLANGIATO | SHAFT | ARBRE | WELLE | EJE |
| | 2 | | 0000645054E | 1.00 | LINGUETTA | FEATHER KEY | LANGUETTE | FEDERKEIL | LINGUETA |
| | 3 | | 0000606102L | 2.00 | CUSCINETTO | BEARING | ROULEMENT | LAGER | COJINETE |
| | 4 | | 0000617201C | 1.00 | ANELLO | RING | BAGUE | RING | ANILLO |
| | 5 | | 0322740048B | 1.00 | STAFFA | BRACKET | BRIDE | BUEGEL | ABRAZADERA |
| | 6 | | 0001308647G | 1.00 | FINECORSA | MICROSWITCH | FIN DE COURSE | MIKROSCHALTER | FIN CARRERA |
| | 7 | | 0721940544C | 1.00 | CILINDRO PNEUMATICO | PNEUMATIC CYLINDER | CYLINDRE PNEUMATIQUE | PNEUMATIKZYLINDER | CILINDRO NEUMATICO |
| | 8 | | 0001908001C | 1.00 | RIDUZ.ES.ALT | REDUCING PIECE (THICK) MF | PIECE RED. HEX.EPAIS | REDUZIERSTUECK | RED.MH EX.ALTO |
| | 9 | | 0001904160E | 1.00 | RACCORDO | FITTING | RACCORD | ANSCHLUSS | CONEXION |
| | 10 | | 0001904525A | 1.00 | RACCORDO | FITTING | RACCORD | ANSCHLUSS | CONEXION |
| | 11 | | 0000644278L | 1.00 | ANELLO SEEGER | CIRCLIP | CIRCLIP | SEEGERRING | SEEGER |
| | 12 | | 0722740014H | 1.00 | GIUNTO CARDANICO | UNIVERSAL JOINT | JOINT A CARDAN | KARDANGELENK | ARTICULACION CARDANICA |
| | 12 | | 0722740061G | 1.00 | GIUNTO CARDANICO | UNIVERSAL JOINT | JOINT A CARDAN | KARDANGELENK | ARTICULACION CARDANICA |
| | 13 | | 0000601013E | 2.00 | BOCCOLA | BUSHING | DOUILLE | BUCHSE | CASQUILLO |
| | 13 | | 0000601248D | 2.00 | BOCCOLA | BUSHING | DOUILLE | BUCHSE | CASQUILLO |
| | 14 | | 0522740046B | 1.00 | FORCELLA | FORK | FOURCHE | GABEL | HORQUILLA |
| | 15 | | 0322740012E | 1.00 | ALBERO | SHAFT | ARBRE | WELLE | EJE |
| | 16 | | 0000613045G | 1.00 | RALLA | WASHER | CRAPAUDINE | SCHEIBE | RANGUA |
| | 16 | | 0000613086D | 1.00 | RALLA | BEARING | CRAPAUDINE | SCHEIBE | RANGUA |
| | 17 | | 0000644268H | 1.00 | ANELLO SEEGER | CIRCLIP | CIRCLIP | SEEGERRING | SEEGER |
| | 18 | | 0322740817D | 1.00 | ATTACCO | CONNECTING ROD | BARRE FIXATION | STAB | CONEXION |
| | 19 | | 0311131411A | 2.00 | CAMMA | CAM | CAME | NOCKEN | EXCENTRICO |
| | 20 | | 0001308592L | 2.00 | FINECORSA | LIMIT SWITCH | FIN DE COURSE | ENDSCHALTER | FIN CARRERA |

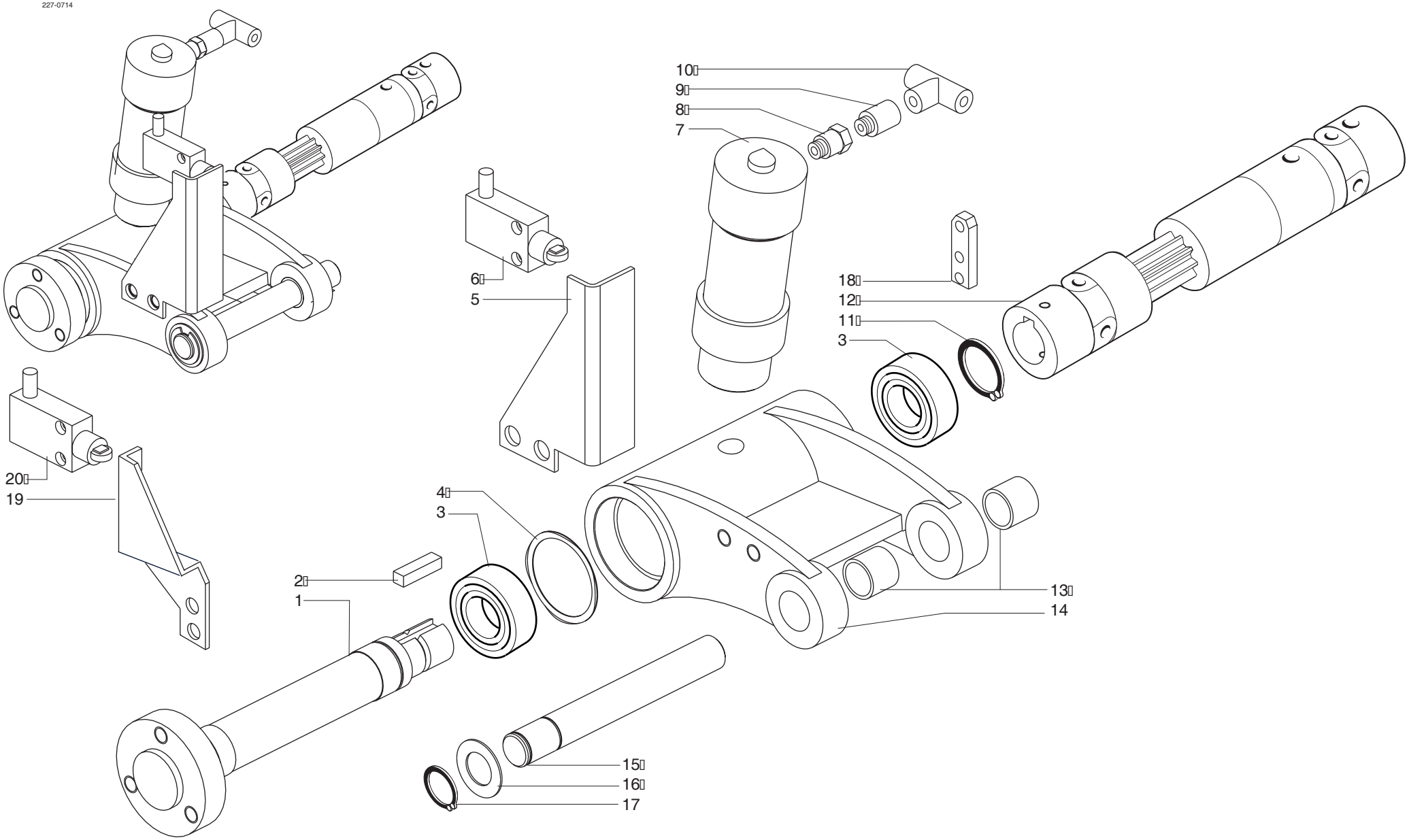


| scm | SUPERSET XL | FORCELLA FLANG. LUNGA SX - (01.01.1901 -> - p.20,06,2007)<br>LONG FLANGED FORK (LEFT) - FOURCHE A BRIDE LONGUE (GAUCHE)<br>LANGE FLANSCHGABEL (LINK) - HORQUILLA ANILLOS LARGA IZQUIERDA | 227-0714-0 |
|---|---|---|---|

| scm | SUPERSET XL | FORCELLA FLANGIATA LUNGA DX - (p.20,06,2007)<br>LONG FLANGED FORK (RIGHT) - FOURCHE A BRIDE LONGUE (DROITE)<br>LANGE FLANSCHGABEL (RECHT) - HORQUILLA ANILLOS LARGA DERECHA | 227-0715-0 |
|---|---|---|---|

| N | P | C | CODICE | Q.TY | DENOMINAZIONE | DESCRIPTION | DESIGNATION | BEZEICHNUNG | DENOMINACION |
|---|---|---|---|---|---|---|---|---|---|
| | 01.01.1901 -> 01.01.3000 | | | | Note: 2822740045H | | | | |
| | 1 | | 0322740018H | 1.00 | ALBERO FLANGIATO | SHAFT | ARBRE | WELLE | EJE |
| | 2 | | 0000645054E | 1.00 | LINGUETTA | FEATHER KEY | LANGUETTE | FEDERKEIL | LINGUETA |
| | 3 | | 0000606102L | 2.00 | CUSCINETTO | BEARING | ROULEMENT | LAGER | COJINETE |
| | 4 | | 0000617201C | 1.00 | ANELLO | RING | BAGUE | RING | ANILLO |
| | 5 | | 0000601013E | 2.00 | BOCCOLA | BUSHING | DOUILLE | BUCHSE | CASQUILLO |
| | 5 | | 0000601248D | 2.00 | BOCCOLA | BUSHING | DOUILLE | BUCHSE | CASQUILLO |
| | 6 | | 0522740046B | 1.00 | FORCELLA | FORK | FOURCHE | GABEL | HORQUILLA |
| | 7 | | 0721940544C | 1.00 | CILINDRO PNEUMATICO | PNEUMATIC CYLINDER | CYLINDRE PNEUMATIQUE | PNEUMATIKZYLINDER | CILINDRO NEUMATICO |
| | 8 | | 0001908001C | 1.00 | RIDUZ.ES.ALT | REDUCING PIECE (THICK) MF | PIECE RED. HEX.EPAIS | REDUZIERSTUECK | RED.MH EX.ALTO |
| | 9 | | 0001904160E | 1.00 | RACCORDO | FITTING | RACCORD | ANSCHLUSS | CONEXION |
| | 10 | | 0001904525A | 1.00 | RACCORDO | FITTING | RACCORD | ANSCHLUSS | CONEXION |
| | 11 | | 0000644278L | 1.00 | ANELLO SEEGER | CIRCLIP | CIRCLIP | SEEGERRING | SEEGER |
| | 12 | | 0722740014H | 1.00 | GIUNTO CARDANICO | UNIVERSAL JOINT | JOINT A CARDAN | KARDANGELENK | ARTICULACION CARDANICA |
| | 12 | | 0722740061G | 1.00 | GIUNTO CARDANICO | UNIVERSAL JOINT | JOINT A CARDAN | KARDANGELENK | ARTICULACION CARDANICA |
| | 13 | | 0322740012E | 1.00 | ALBERO | SHAFT | ARBRE | WELLE | EJE |
| | 14 | | 0000613045G | 1.00 | RALLA | WASHER | CRAPAUDINE | SCHEIBE | RANGUA |
| | 14 | | 0000613086D | 1.00 | RALLA | BEARING | CRAPAUDINE | SCHEIBE | RANGUA |
| | 15 | | 0000644268H | 1.00 | ANELLO SEEGER | CIRCLIP | CIRCLIP | SEEGERRING | SEEGER |

227-0715

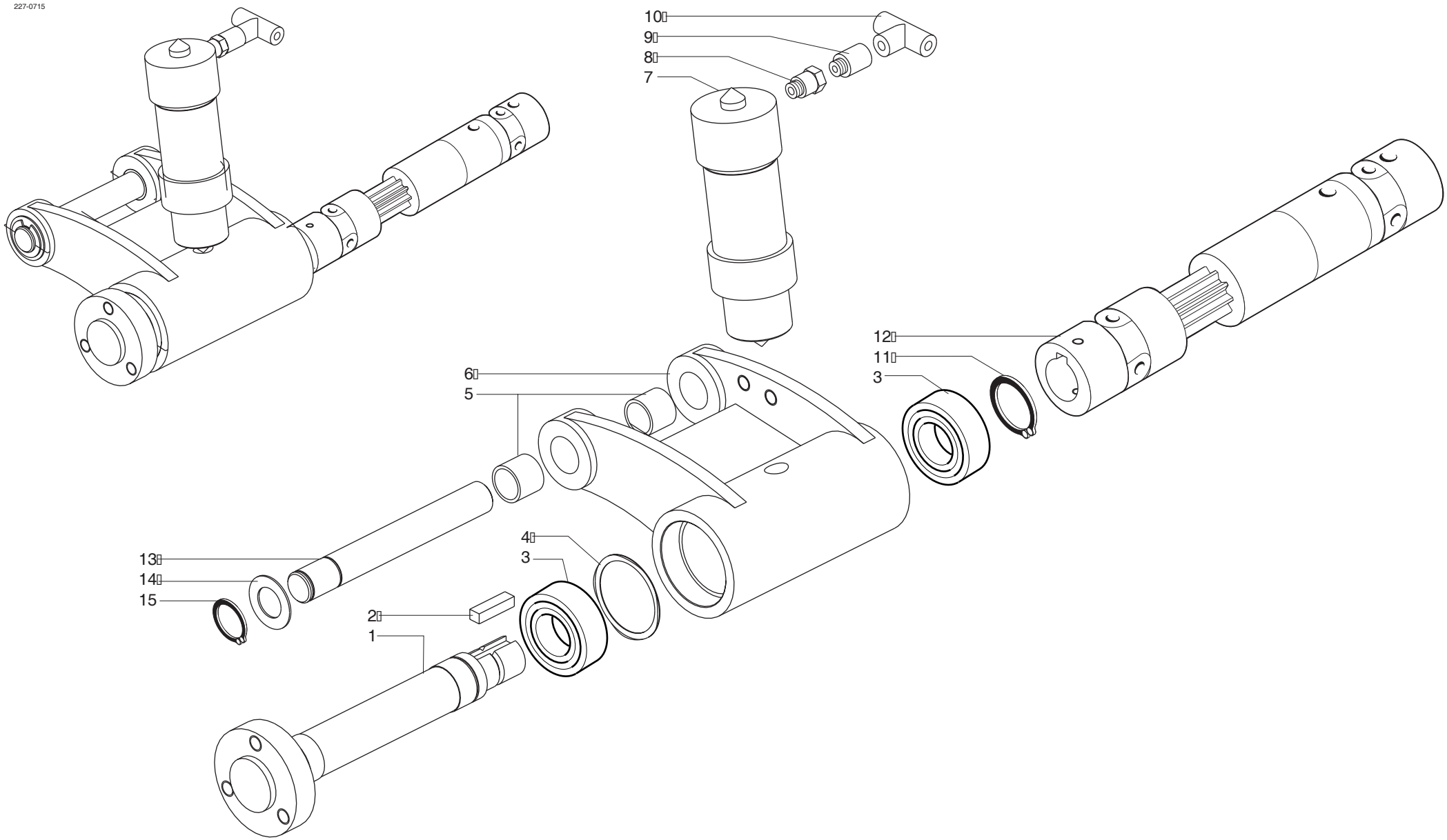


| scm | SUPERSET XL | FORCELLA FLANGIATA LUNGA DX - (01.01.1901 -> - p.20,06,2007)<br>LONG FLANGED FORK (RIGHT) - FOURCHE A BRIDE LONGUE (DROITE)<br>LANGE FLANSCHGABEL (RECHT) - HORQUILLA ANILLOS LARGA DERECHA | 227-0715-0 |
|---|---|---|---|

| scm | SUPERSET XL | FORCELLA TRAINO DX FL. TELESCOPICA - (p.20,06,2007)<br>TELESCOPIC FLANGED FEED FORK (RIGHT) - FOURCHE A BRIDE TELECOPIQUE DROITE<br>TELESKOPFLANSCHGABEL (RECHT) - HORQUILLA ARRASTRE DER ANI. TELESCOPICA | 227-0716-0 |
|---|---|---|---|

| N | P | C | CODICE | Q.TY | DENOMINAZIONE | DESCRIPTION | DESIGNATION | BEZEICHNUNG | DENOMINACION |
|---|---|---|---|---|---|---|---|---|---|
| | 01.01.1901 -> 01.01.3000 | | | | Note: 2822740065A | | | | |
| | 1 | | 0000645054E | 1.00 | LINGUETTA | FEATHER KEY | LANGUETTE | FEDERKEIL | LINGUETA |
| | 2 | | 0000609149C | 1.00 | CUSC.RAD.A RULLINI | RADIAL ROLLER BEARING | ROULEMENT RAD. A ROULEAUX | RADIALROLLENLAGER | COJ.RAD.A ROD. |
| | 3 | | 0000601013E | 2.00 | BOCCOLA | BUSHING | DOUILLE | BUCHSE | CASQUILLO |
| | 3 | | 0000601248D | 2.00 | BOCCOLA | BUSHING | DOUILLE | BUCHSE | CASQUILLO |
| | 4 | | 0721940544C | 1.00 | CILINDRO PNEUMATICO | PNEUMATIC CYLINDER | CYLINDRE PNEUMATIQUE | PNEUMATIKZYLINDER | CILINDRO NEUMATICO |
| | 5 | | 0001908001C | 1.00 | RIDUZ.ES.ALT | REDUCING PIECE (THICK) MF | PIECE RED. HEX.EPAIS | REDUZIERSTUECK | RED.MH EX.ALTO |
| | 6 | | 0001904160E | 1.00 | RACCORDO | FITTING | RACCORD | ANSCHLUSS | CONEXION |
| | 7 | | 0001904525A | 1.00 | RACCORDO | FITTING | RACCORD | ANSCHLUSS | CONEXION |
| | 8 | | 0722740014H | 1.00 | GIUNTO CARDANICO | UNIVERSAL JOINT | JOINT A CARDAN | KARDANGELENK | ARTICULACION CARDANICA |
| | 8 | | 0722740061G | 1.00 | GIUNTO CARDANICO | UNIVERSAL JOINT | JOINT A CARDAN | KARDANGELENK | ARTICULACION CARDANICA |
| | 9 | | 0000644278L | 1.00 | ANELLO SEEGER | CIRCLIP | CIRCLIP | SEEGERRING | SEEGER |
| | 10 | | 0000644056H | 1.00 | ANELLO SEEGER | CIRCLIP | CIRCLIP | SEEGERRING | SEEGER |
| | 11 | | 0000606102L | 1.00 | CUSCINETTO | BEARING | ROULEMENT | LAGER | COJINETE |
| | 12 | | 0322740261C | 1.00 | FORCELLA | FORK | FOURCHE | GABEL | HORQUILLA |

227-0716

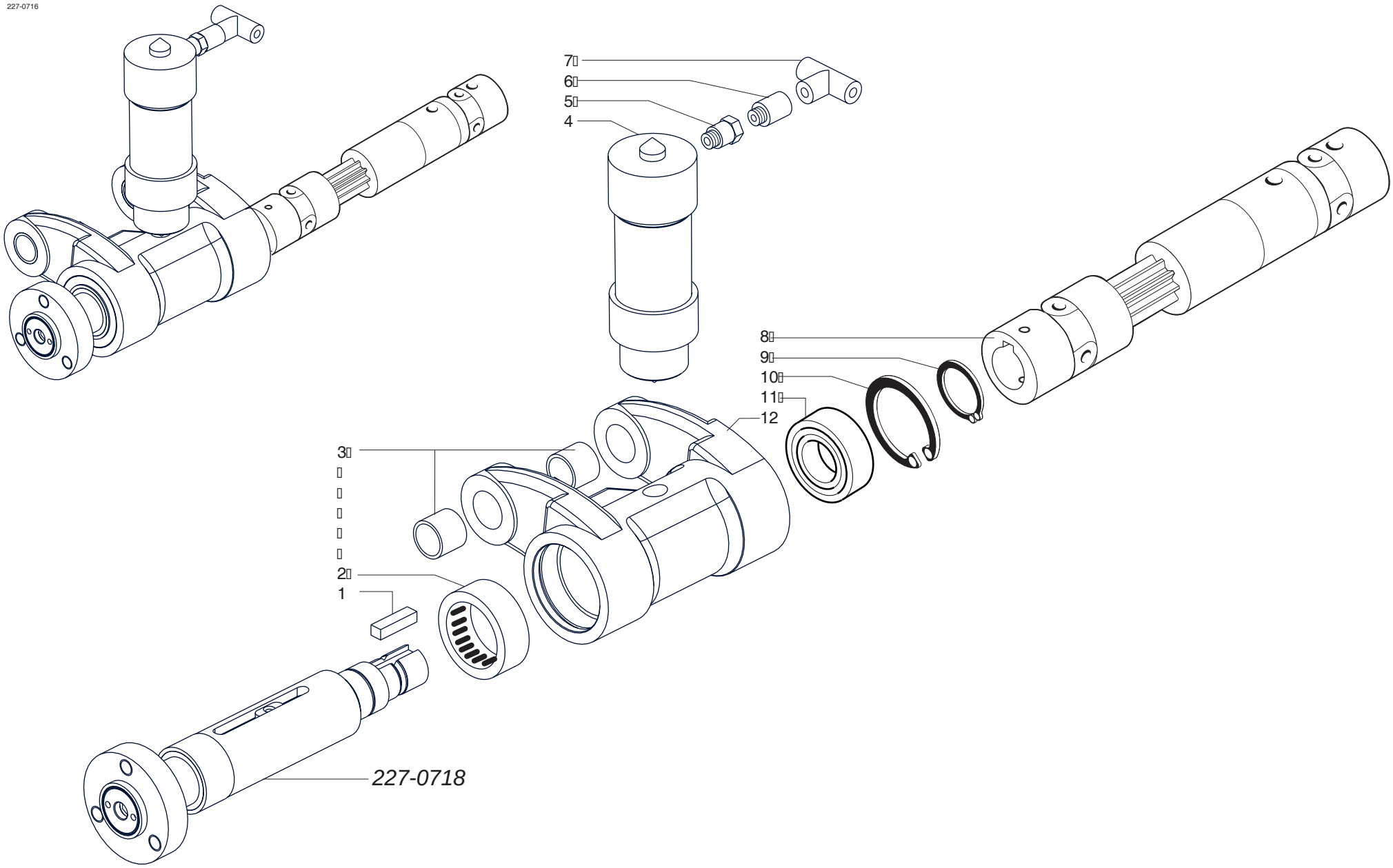


| scm | SUPERSET XL | FORCELLA TRAINO DX FL. TELESCOPICA - (01.01.1901 -> - p.20,06,2007)<br>TELESCOPIC FLANGED FEED FORK (RIGHT) - FOURCHE A BRIDE TELECOPIQUE DROITE<br>TELESKOPFLANSCHGABEL (RECHT) - HORQUILLA ARRASTRE DER ANI. TELESCOPICA | 227-0716-0 |
|---|---|---|---|

| scm | SUPERSET XL | FORCELLA TRAINO SX FL. TELESCOPICA - (p.20,06,2007)<br>TELESCOPIC FLANGED FEED FORK (LEFT) - FOURCHE A BRIDE TELESCOPIQUE GAUCHE<br>TELESKOPFLANSCHGABEL (LINK) - HORQUILLA ARRASTRE IZQ ANI TELESCOPICA | 227-0717-0 |
|---|---|---|---|

| N | P | C | CODICE | Q.TY | DENOMINAZIONE | DESCRIPTION | DESIGNATION | BEZEICHNUNG | DENOMINACION |
|---|---|---|---|---|---|---|---|---|---|
| | 01.01.1901 -> 01.01.3000 | | | | Note: 2822740075B | | | | |
| | 1 | | 0000645054E | 1.00 | LINGUETTA | FEATHER KEY | LANGUETTE | FEDERKEIL | LINGUETA |
| | 2 | | 0000609149C | 1.00 | CUSC.RAD.A RULLINI | RADIAL ROLLER BEARING | ROULEMENT RAD. A ROULEAUX | RADIALROLLENLAGER | COJ.RAD.A ROD. |
| | 3 | | 0000601013E | 2.00 | BOCCOLA | BUSHING | DOUILLE | BUCHSE | CASQUILLO |
| | 3 | | 0000601248D | 2.00 | BOCCOLA | BUSHING | DOUILLE | BUCHSE | CASQUILLO |
| | 4 | | 0721940544C | 1.00 | CILINDRO PNEUMATICO | PNEUMATIC CYLINDER | CYLINDRE PNEUMATIQUE | PNEUMATIKZYLINDER | CILINDRO NEUMATICO |
| | 5 | | 0001908001C | 1.00 | RIDUZ.ES.ALT | REDUCING PIECE (THICK) MF | PIECE RED. HEX.EPAIS | REDUZIERSTUECK | RED.MH EX.ALTO |
| | 6 | | 0001904160E | 1.00 | RACCORDO | FITTING | RACCORD | ANSCHLUSS | CONEXION |
| | 7 | | 0001904525A | 1.00 | RACCORDO | FITTING | RACCORD | ANSCHLUSS | CONEXION |
| | 8 | | 0722740014H | 1.00 | GIUNTO CARDANICO | UNIVERSAL JOINT | JOINT A CARDAN | KARDANGELENK | ARTICULACION CARDANICA |
| | 8 | | 0722740061G | 1.00 | GIUNTO CARDANICO | UNIVERSAL JOINT | JOINT A CARDAN | KARDANGELENK | ARTICULACION CARDANICA |
| | 9 | | 0000644278L | 1.00 | ANELLO SEEGER | CIRCLIP | CIRCLIP | SEEGERRING | SEEGER |
| | 10 | | 0000644056H | 1.00 | ANELLO SEEGER | CIRCLIP | CIRCLIP | SEEGERRING | SEEGER |
| | 11 | | 0000606102L | 1.00 | CUSCINETTO | BEARING | ROULEMENT | LAGER | COJINETE |
| | 12 | | 0322740261C | 1.00 | FORCELLA | FORK | FOURCHE | GABEL | HORQUILLA |
| | 13 | | 0322740012E | 1.00 | ALBERO | SHAFT | ARBRE | WELLE | EJE |
| | 14 | | 0000613086D | 1.00 | RALLA | BEARING | CRAPAUDINE | SCHEIBE | RANGUA |
| | 15 | | 0000644268H | 1.00 | ANELLO SEEGER | CIRCLIP | CIRCLIP | SEEGERRING | SEEGER |

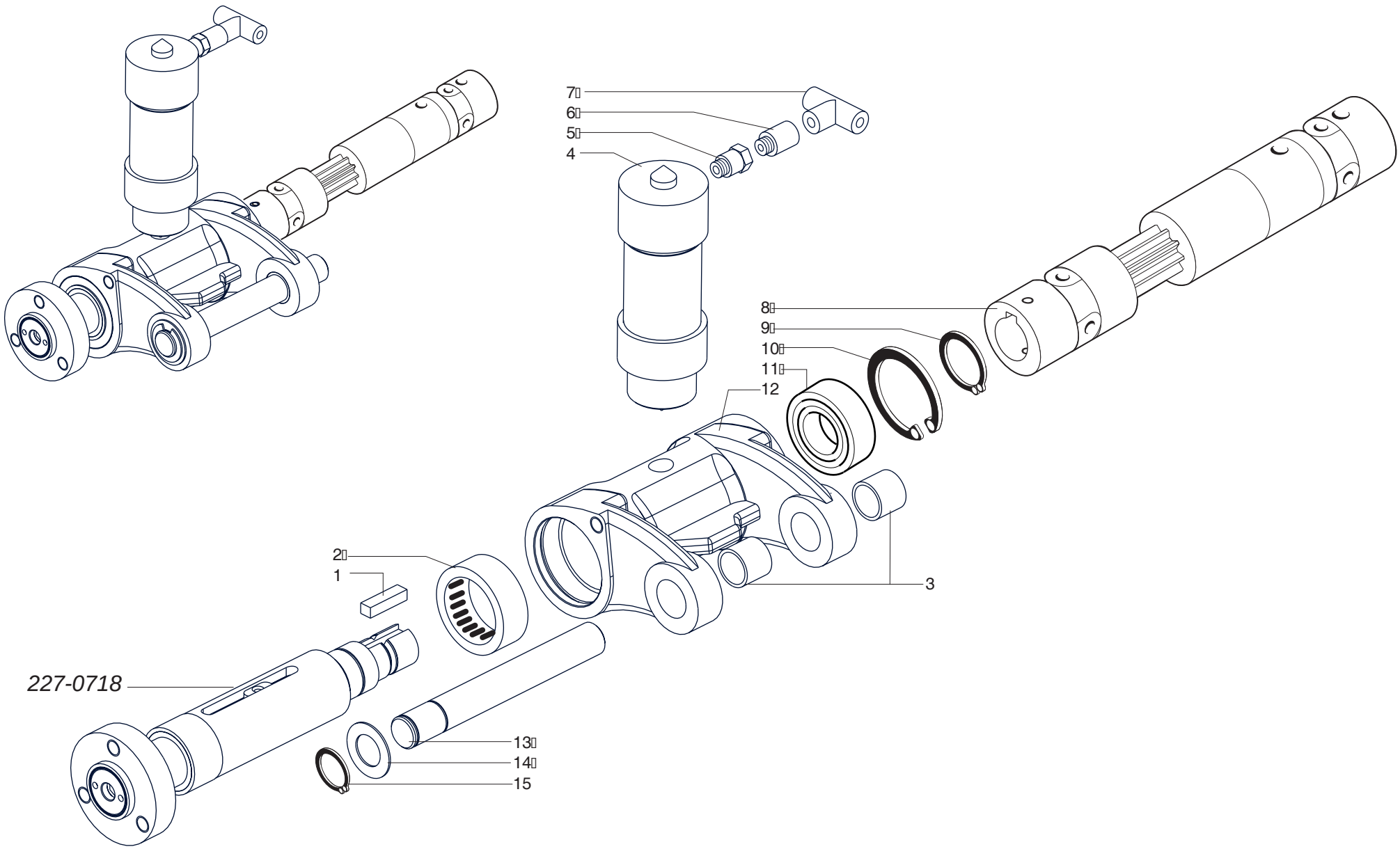


| | | | |
|---|---|---|---|
| scm | **SUPERSET XL** | **FORCELLA TRAINO SX FL. TELESCOPICA - (01.01.1901 -> - p.20,06,2007)**<br>**TELESCOPIC FLANGED FEED FORK (LEFT) - FOURCHE A BRIDE TELESCOPIQUE GAUCHE**<br>**TELESKOPFLANSCHGABEL (LINK) - HORQUILLA ARRASTRE IZQ ANI TELESCOPICA** | **227-0717-0** |

| scm | SUPERSET XL | ALBERO TRAINO FLANG. TELESCOPICO L=50 MM - (p.20,06,2007)<br>FLANGED FEED SHAFT (TELESCOPIC) L=50 MM - ARBRE A BRIDE TELESCOPIQUE L=50 MM<br>TELESKOPFLANSCHWELLE L=50 MM - EJE ARRASTRE ANIL. TELESCOPICO L=50 | 227-0718-0 |
|---|---|---|---|

| N | P | C | CODICE | Q.TY | DENOMINAZIONE | DESCRIPTION | DESIGNATION | BEZEICHNUNG | DENOMINACION |
|---|---|---|---|---|---|---|---|---|---|
| | 01.01.1901 -> 01.01.3000 | | | | Note: 2822740260D | | | | |
| | 1 | | 0322740267F | 1.00 | GHIERA | RING NUT | EMBOUT | NUTMUTTER | COLLAR |
| | 2 | | 0000309306C | 1.00 | VITE | SCREW | VIS | SCHRAUBE | TORNILLO |
| | 3 | | 0000305340L | 1.00 | ROSETTA | WASHER | RONDELLE | SCHEIBE | ARANDELA |
| | 4 | | 0322740263G | 1.00 | ALBERO | SHAFT | ARBRE | WELLE | EJE |
| | 5 | | 0322740265B | 1.00 | TIRANTE | TIE-ROD | TIRANT | ZUGBOLZEN | TIRANTE |
| | 6 | | 0322740264L | 1.00 | BLOCCAGGIO | LOCKING DEVICE | BLOCAGE | SPERRE | BLOQUEO |
| | 7 | | 0322740268H | 1.00 | CONO | CONE | CONE | KEGEL | CONO |
| | 8 | | 0000301361L | 1.00 | DADO | NUT | ECROU | MUTTER | TUERCA |
| | 9 | | 0000609241G | 1.00 | GUARNIZIONE | GASKET | JOINT | DICHTUNG | JUNTA |
| | 10 | | 0322740262E | 1.00 | ALBERO | SHAFT | ARBRE | WELLE | EJE |
| | 11 | | 0322740266D | 2.00 | LINGUETTA | FEATHER KEY | LANGUETTE | FEDERKEIL | LINGUETA |
| | 12 | | 0001908042L | 1.00 | SILENZIATORE | SILENCER | SILENCIEUX | SCHALLDAEMPFER | SILENCIADOR |

227-0718

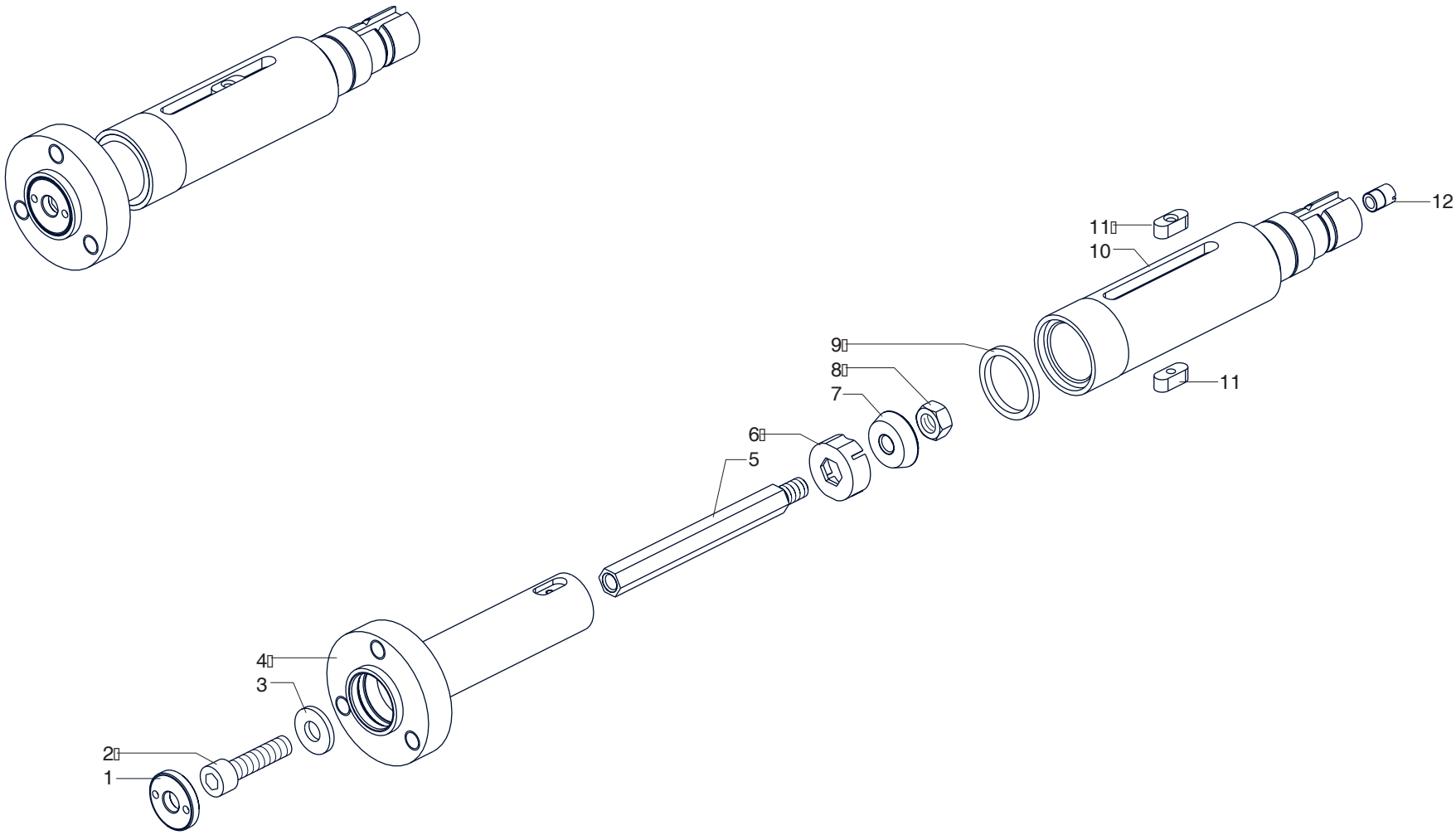


| | | | |
|---|---|---|---|
| scm | SUPERSET XL | ALBERO TRAINO FLANG. TELESCOPICO L=50 MM - (01.01.1901 -> - p.20,06,2007)<br>FLANGED FEED SHAFT (TELESCOPIC) L=50 MM - ARBRE A BRIDE TELESCOPIQUE L=50 MM<br>TELESKOPFLANSCHWELLE L=50 MM - EJE ARRASTRE ANIL. TELESCOPICO L=50 | 227-0718-0 |

| scm | SUPERSET XL | SOLLEVAMENTO RUOTE DI TRAINO - (p.20,06,2007)<br>FEED WHEELS LIFTING UNIT - GROUPE SOULEVEMENT ROUES ENTRAIN<br>DURCHZUGRAEDERHUB - ELEVACION RUEDAS DE ARRASTRE | 227-0719-0 |
|---|---|---|---|

| N | P | C | CODICE | Q.TY | DENOMINAZIONE | DESCRIPTION | DESIGNATION | BEZEICHNUNG | DENOMINACION |
|---|---|---|---|---|---|---|---|---|---|
| | 01.01.1901 -> 01.01.3000 | | | | Note: 2822740320B | | | | |
| | 1 | | 0321940110C | 1.00 | POMELLO | BALL GRIP | GRIFFE | KUGELGRIFF | POMO |
| | 2 | | 0321940125E | 1.00 | BARRA FILETTATA | THREADED ROD | BARRE FILETEE | GEWINDESTAB | BARRA ROSCADA |
| | 3 | | 0321940111E | 1.00 | BLOCCHETTO | BLOCK | BLOC | BLOCK | BLOQUE |
| | 4 | | 0000629291G | 1.00 | CERNIERA X CIL. | HINGE FOR CYLINDER | CHARNIERE | SCHARNIER F.ZYL. | BISAGRA |
| | 5 | | 0001500035B | 1.00 | CILINDRO PNEUMATICO | PNEUMATIC CYLINDER | CYLINDRE PNEUMATIQUE | PNEUMATIKZYLINDER | CILINDRO NEUMATICO |
| | 5 | | 0001500961F | 1.00 | CILINDRO PNEUMATICO | PNEUMATIC CYLINDER | CYLINDRE PNEUM. | PN.ZYLINDER | STANDARD |
| | 6 | | 0000304365B | 1.00 | VITE | SCREW | VIS | SCHRAUBE | TORNILLO |
| | 7 | | 0322740013G | 1.00 | BLOCCHETTO | BLOCK | BLOC | BLOCK | BLOQUE |
| | 8 | | 0322740821B | 1.00 | ATTACCO | CONNECTING ROD | BARRE FIXATION | STAB | CONEXION |
| | 9 | | 0001502033L | 1.00 | ATTUATORE | ACTUATOR | ACTIONNEUR | ANTRIEB | ACCIONADOR |
| | 10 | | 0001904558A | 1.00 | RACCORDO | FITTING | RACCORD | ANSCHLUSS | CONEXION |
| | 11 | | 0001508832B | 2.00 | VALVOLA REGOLATRICE | VALVE | SOUPAPE DE REGLAGE | EINSTELLVENTIL | VALVULA REGULADORA |
| | 12 | | 0001308846L | 1.00 | FINECORSA PER CILINDRO | LIMIT SWITCH | FIN DE COURSE | ENDSCHALTER | FIN CARRERA |

227-0719

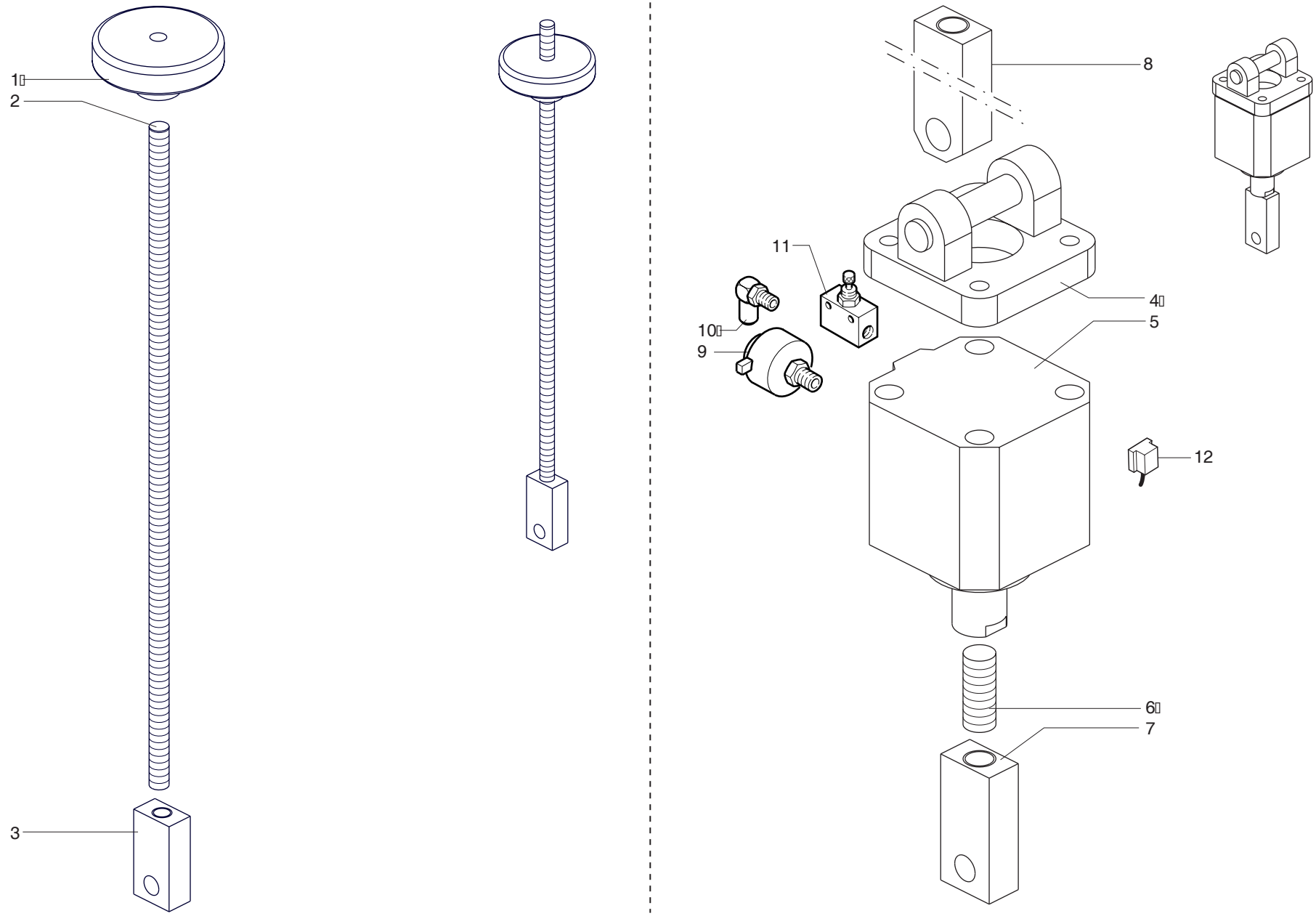


| | | | |
|---|---|---|---|
| scm | SUPERSET XL | SOLLEVAMENTO RUOTE DI TRAINO - (01.01.1901 -> - p.20,06,2007)<br>FEED WHEELS LIFTING UNIT - GROUPE SOULEVEMENT ROUES ENTRAIN<br>DURCHZUGRAEDERHUB - ELEVACION RUEDAS DE ARRASTRE | 227-0719-0 |

| scm | SUPERSET XL | SOLLEVAMENTO RUOTE DI TRAINO - (p.20,06,2007)<br>FEED WHEELS LIFTING UNIT - GROUPE SOULEVEMENT ROUES ENTRAIN<br>DURCHZUGRAEDERHUB - ELEVACION RUEDAS DE ARRASTRE | 227-0719-X |
|---|---|---|---|

| N | P | C | CODICE | Q.TY | DENOMINAZIONE | DESCRIPTION | DESIGNATION | BEZEICHNUNG | DENOMINACION |
|---|---|---|---|---|---|---|---|---|---|
| | 01.01.1901 -> 01.01.3000 | | | | Note: 2822740320B | | | | |
| | 1 | | 0321940110C | 1.00 | POMELLO | BALL GRIP | GRIFFE | KUGELGRIFF | POMO |
| | 2 | | 0321940125E | 1.00 | BARRA FILETTATA | THREADED ROD | BARRE FILETEE | GEWINDESTAB | BARRA ROSCADA |
| | 3 | | 0321940111E | 1.00 | BLOCCHETTO | BLOCK | BLOC | BLOCK | BLOQUE |
| | 4 | | 0000629291G | 1.00 | CERNIERA X CIL. | HINGE FOR CYLINDER | CHARNIERE | SCHARNIER F.ZYL. | BISAGRA |
| | 5 | | 0001500961F | 1.00 | CILINDRO PNEUMATICO | PNEUMATIC CYLINDER | CYLINDRE PNEUM. | PN.ZYLINDER | STANDARD |
| | 6 | | 0000304365B | 1.00 | VITE | SCREW | VIS | SCHRAUBE | TORNILLO |
| | 7 | | 0322740013G | 1.00 | BLOCCHETTO | BLOCK | BLOC | BLOCK | BLOQUE |

227-0719

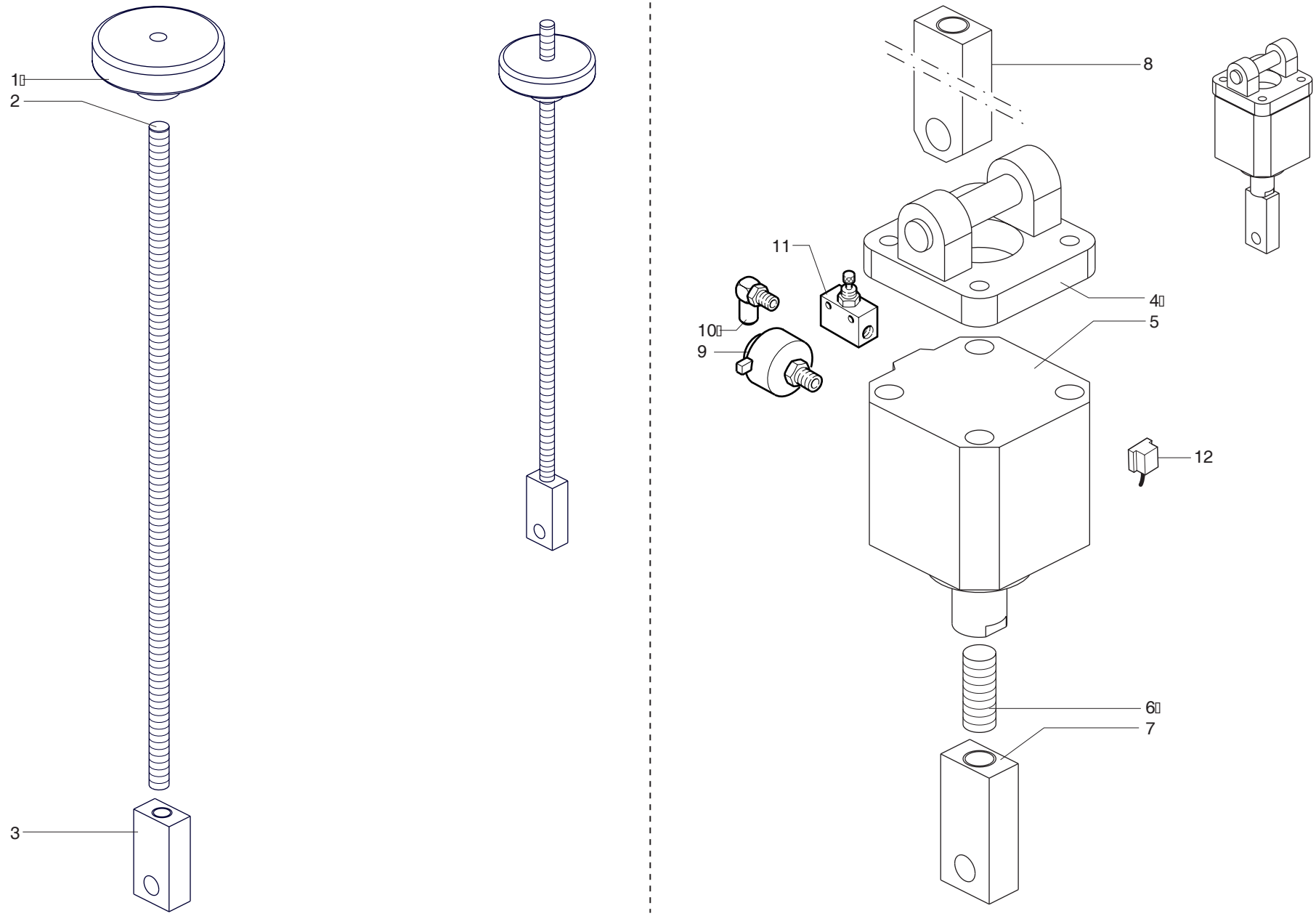


| | | | |
|---|---|---|---|
| scm | SUPERSET XL | SOLLEVAMENTO RUOTE DI TRAINO - (01.01.1901 -> - p.20,06,2007)<br>FEED WHEELS LIFTING UNIT - GROUPE SOULEVEMENT ROUES ENTRAIN<br>DURCHZUGRAEDERHUB - ELEVACION RUEDAS DE ARRASTRE | 227-0719-X |

| scm | SUPERSET XL | RULLI DI TRAINO - (p.20,06,2007)<br>FEEDROLLERS - ROULEAUX D'ENTRAINEMENT<br>DURCHZUGWALZEN - RODILLOS ARRASTRE | 227-0720-0 |
|---|---|---|---|

| N | P | C | CODICE | Q.TY | DENOMINAZIONE | DESCRIPTION | DESIGNATION | BEZEICHNUNG | DENOMINACION |
|---|---|---|---|---|---|---|---|---|---|
| | 01.01.1901 -> 01.01.3000 | | | | Note: 2822740332G | | | | |
| | 1 | | 2722701004B | 1.00 | CHIAVETTA | KEY | CLAVETTE | KEIL | CHAVETA |
| | 2 | | 0522740028D | 1.00 | RUOTA GOMMATA | RUBBER WHEEL | ROUE EN CAOUTCHOUC MINCHE | DUENNES GUMMIRAD | RUEDA GOMA |
| | 3 | | 0322740015B | 1.00 | RUOTA DENTATA | GEAR WHEEL | ROUE DENTEE | ZAHNRAD | RUEDA DENTADA |
| | 4 | | 0319441202A | 2.00 | RUOTA | WHEEL | ROUE | RAD | RUEDA |
| | 5 | | 0319441203C | 1.00 | DISTANZIALE | SPACER | ENTRETOISE | DISTANZSTUECK | DISTANCIADOR |
| | 6 | | 0519441208H | 2.00 | RULLO GOMMATO | ROLLER | ROULEAU | WALZE | RODILLO |

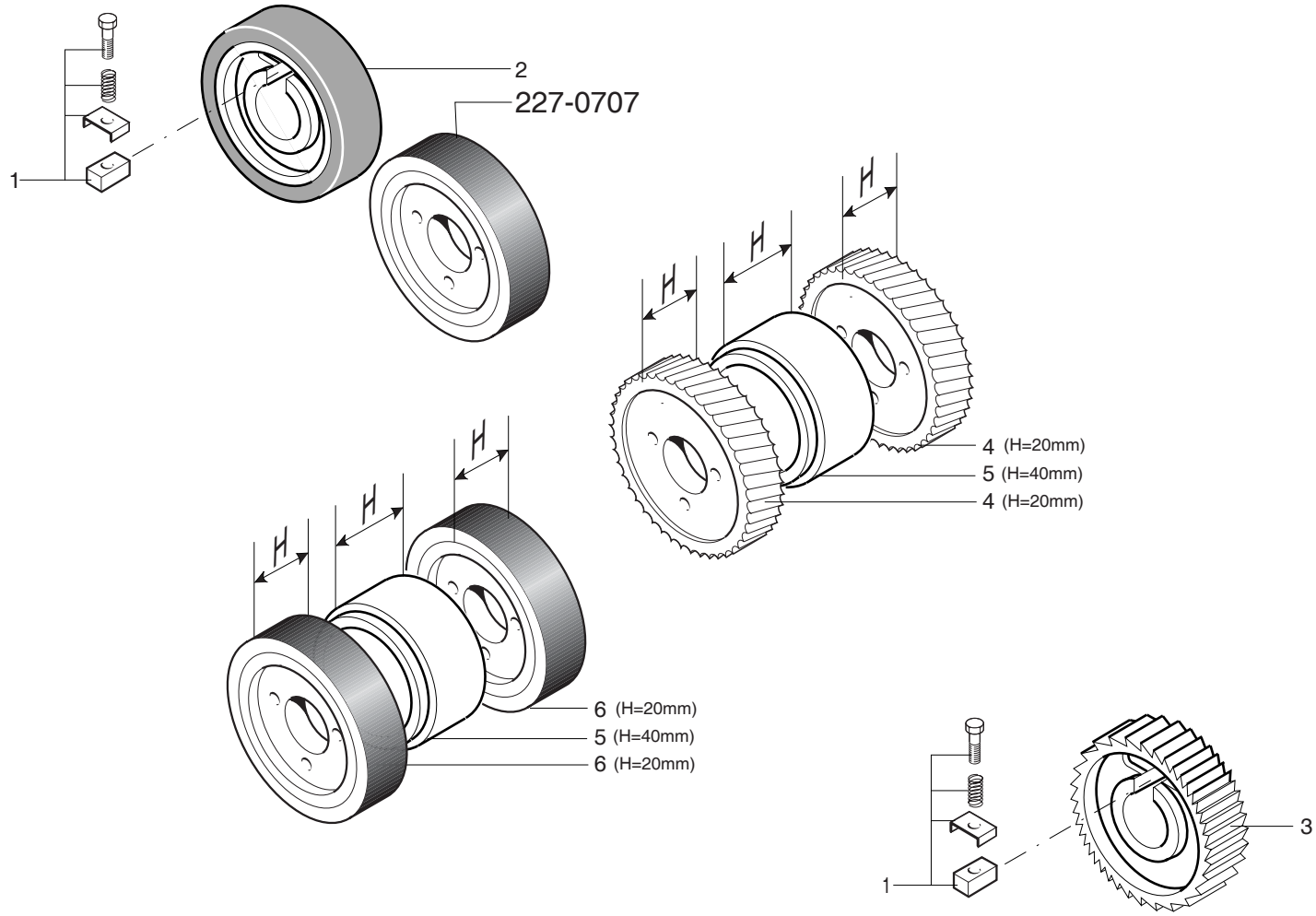
2
227-0707
1
H
H
H
4 (H=20mm)
5 (H=40mm)
4 (H=20mm)
H
H
H
6 (H=20mm)
5 (H=40mm)
6 (H=20mm)
1
3

| scm | SUPERSET XL | TANDEM L=150 MM - (p.20,06,2007)<br>TANDEM L=150 MM - TANDEM L=150 MM<br>TANDEM L=150 MM - TANDEM L=150 MM | 227-0721-0 |
|---|---|---|---|

| N | P | C | CODICE | Q.TY | DENOMINAZIONE | DESCRIPTION | DESIGNATION | BEZEICHNUNG | DENOMINACION |
|---|---|---|---|---|---|---|---|---|---|
| | 01.01.1901 -> 01.01.3000 | | | | Note: 2822740360F | | | | |
| | 1 | | 0510140009B | 1.00 | SUPPORTO | SUPPORT | SUPPORT | STUETZE | SOPORTE |
| | 2 | | 0321940805H | 1.00 | PERNO | PIN | PIVOT | BOLZEN | PERNO |
| | 3 | | 0321940803D | 1.00 | PERNO | PIN | PIVOT | BOLZEN | PERNO |
| | 4 | | 0321940802B | 1.00 | BIELLA | CONNECTING ROD | BIELLE | PLEUELSTANGE | BIELA |
| | 5 | | 0000304489E | 1.00 | VITE | SCREW | VIS | SCHRAUBE | TORNILLO |
| | 6 | | 0719412602C | 1.00 | MANIGLIA | HANDLE | POIGNEE | HANDGRIFF | MANIJA |
| | 7 | | 0000301559A | 1.00 | GHIERA | RING NUT | EMBOUT | NUTMUTTER | COLLAR |
| | 8 | | 0321940807C | 1.00 | PERNO | PIN | PIVOT | BOLZEN | PERNO |
| | 9 | | 0000301429E | 1.00 | GHIERA | RING NUT | EMBOUT | NUTMUTTER | COLLAR |
| | 10 | | 0321940801L | 1.00 | TESTATA | HEAD | TETE | KOPF | CABEZAL |
| | 11 | | 0316332636C | 1.00 | PASTIGLIA | PAD | PASTILLE | BELAG | PASTILLA |
| | 12 | | 0319016123G | 1.00 | POMOLO | BALL GRIP | POIGNEE | KUGELGRIFF | POMO |
| | 13 | | 0321940804F | 1.00 | ROSETTA | WASHER | RONDELLE | SCHEIBE | ARANDELA |
| | 14 | | 0721940808D | 1.00 | CILINDRO PNEUMATICO | PNEUMATIC CYLINDER | CYLINDRE PNEUMATIQUE | PNEUMATIKZYLINDER | CILINDRO NEUMATICO |
| | 15 | | 0321940806A | 1.00 | PERNO | PIN | PIVOT | BOLZEN | PERNO |
| | 16 | | 0522740818A | 1.00 | SUPPORTO | SUPPORT | SUPPORT | STUETZE | SOPORTE |
| | 17 | | 0319470606D | 1.00 | SUPPORTO | SUPPORT | SUPPORT | STUETZE | SOPORTE |
| | 18 | | 0319480201F | 1.00 | BARRA | BAR | BARRE | STANGE | BARRA |
| | 19 | | 0319480106E | 1.00 | SUPPORTO | SUPPORT | SUPPORT | STUETZE | SOPORTE |

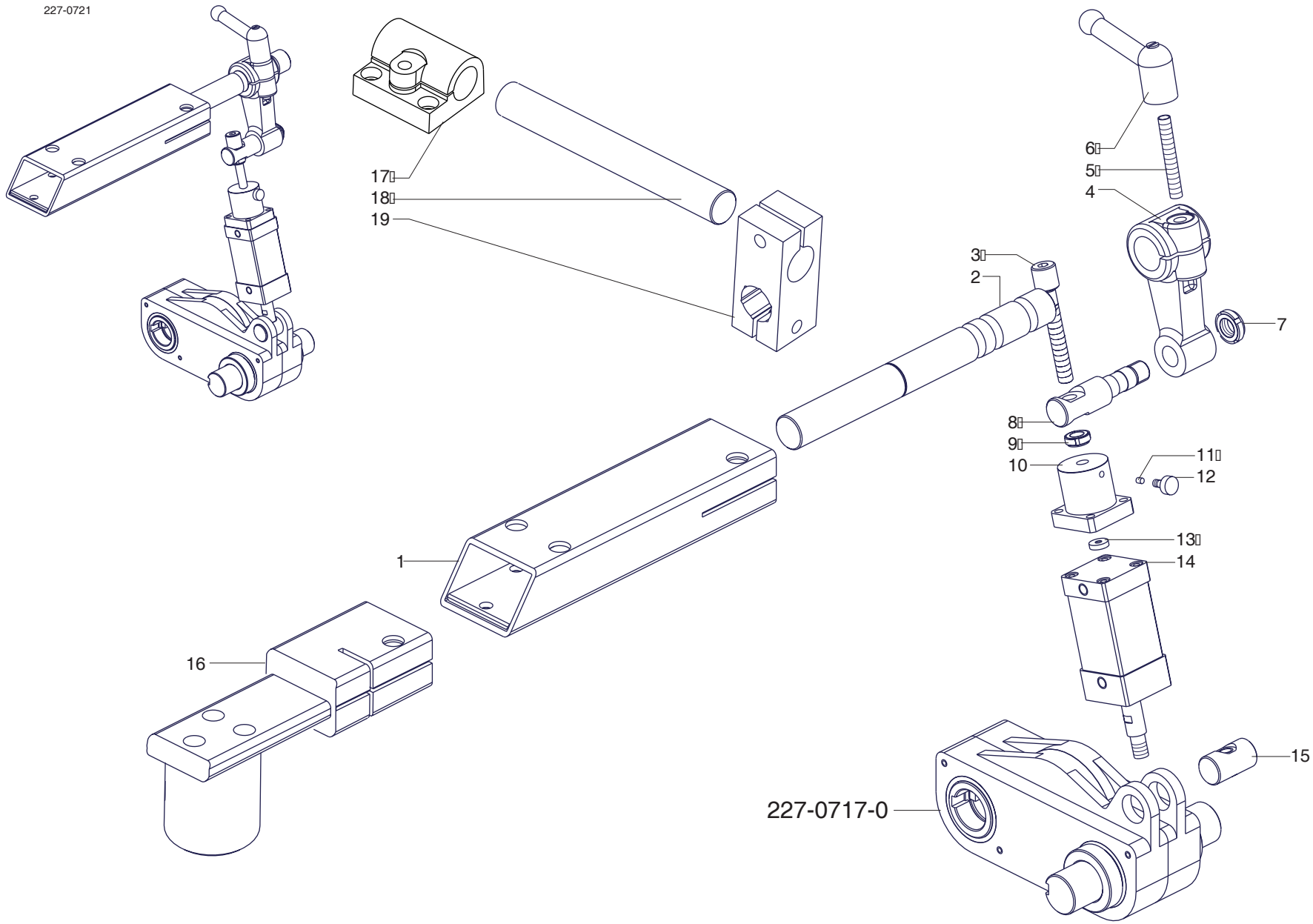


| | | | |
|---|---|---|---|
| scm | SUPERSET XL | TANDEM L=150 MM - (01.01.1901 -> - p.20,06,2007)<br>TANDEM L=150 MM - TANDEM L=150 MM<br>TANDEM L=150 MM - TANDEM L=150 MM | 227-0721-0 |

| N | P | C | CODICE | Q.TY | DENOMINAZIONE | DESCRIPTION | DESIGNATION | BEZEICHNUNG | DENOMINACION |
|---|---|---|---|---|---|---|---|---|---|
| | 01.01.1901 -> 01.01.3000 | | | | Note: 2822740370G | | | | |
| | 1 | | 0321940815L | 2.00 | ANELLO | RING | BAGUE | RING | ANILLO |
| | 2 | | 0321940810H | 1.00 | SEMISCATOLA | HALF BOX | DEMIBOITE | HALBKASTEN | SEMICAJA |
| | 3 | | 0000609309C | 4.00 | ASTUCCIO A RULLINI | ROLLER CASING | ETUI A ROULEAUX | WALZENBUECHSE | COJINETE |
| | 4 | | 0000613046L | 8.00 | RALLA | WASHER | CRAPAUDINE | SCHEIBE | RANGUA |
| | 5 | | 0000613502G | 4.00 | GABBIA A RULLINI | ROLLER CAGE | CAGE A ROULEAUX | WALZENKAEFIG | COJINETE |
| | 6 | | 0321940816B | 4.00 | ANELLO ELASTICO | SPRING RING | BAGUE POUR GAINE | FEDERRING | ANILLO ELASTICO |
| | 7 | | 0321940814G | 2.00 | LINGUETTA | FEATHER KEY | LANGUETTE | FEDERKEIL | LINGUETA |
| | 8 | | 0321940813E | 2.00 | RUOTA DENTATA | GEAR WHEEL | ROUE DENTEE | ZAHNRAD | RUEDA DENTADA |
| | 9 | | 0321940812C | 1.00 | INGRANAGGIO | GEAR | ENGRENAGE | ZAHNRAD | ENGRANAJE |
| | 10 | | 0000609101A | 1.00 | ASTUCCIO A RULLINI | ROLLER CASING | ETUI A ROULEAUX | WALZENBUECHSE | COJINETE |
| | 11 | | 0321940818F | 1.00 | PERNO | PIN | PIVOT | BOLZEN | PERNO |
| | 12 | | 0000704016F | 1.00 | GUARNIZIONE O-R | O-RING | O-RING | O-RING | O-RING |
| | 13 | | 0321940811A | 1.00 | SEMISCATOLA | HALF BOX | DEMIBOITE | HALBKASTEN | SEMICAJA |
| | 14 | | 0319443106L | 1.00 | ALBERO | SHAFT | ARBRE | WELLE | EJE |

227-0722

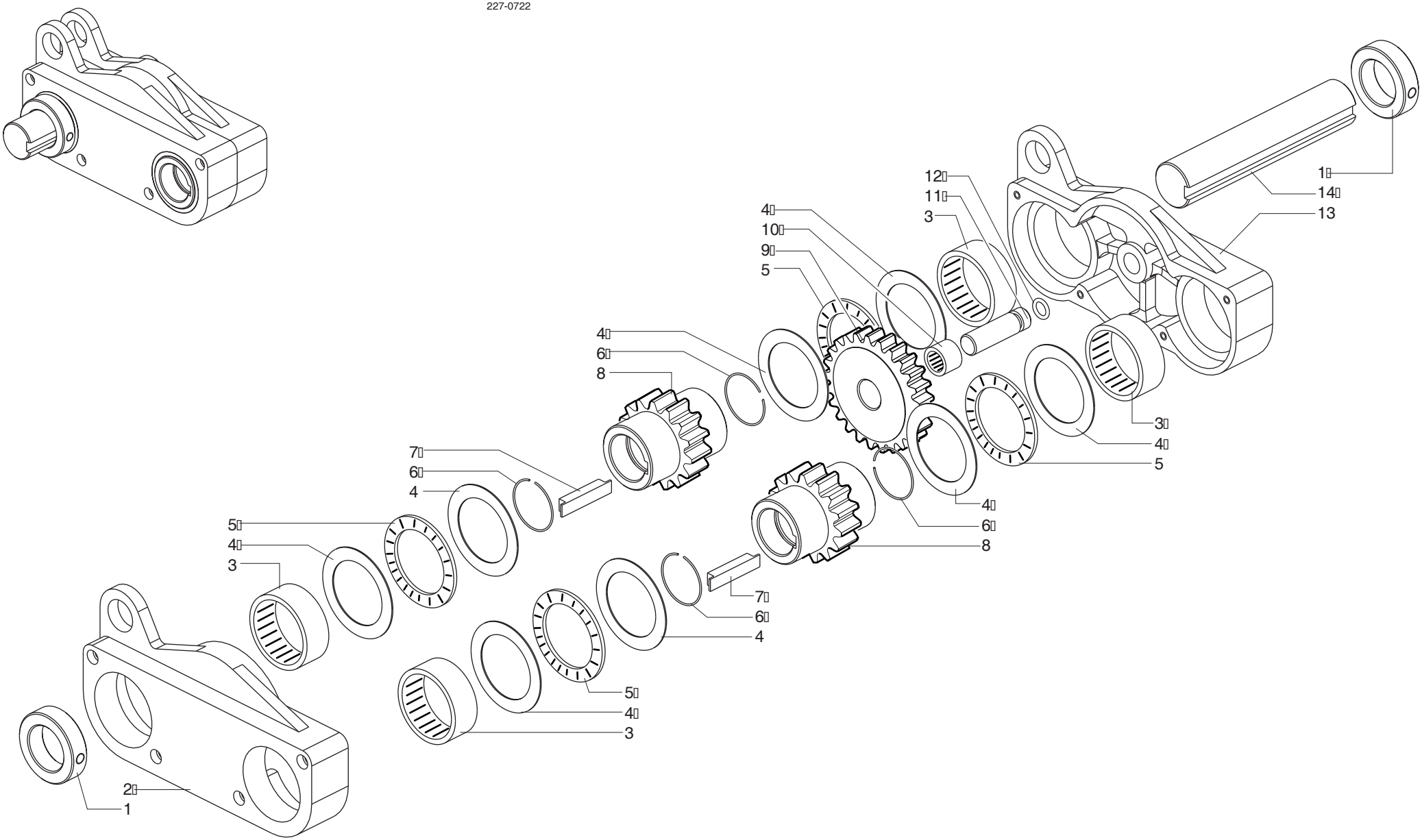


| scm | SUPERSET XL | TANDEM L=150 MM - (01.01.1901 -> - p.20,06,2007)<br>TANDEM L=150 MM - TANDEM L=150 MM<br>TANDEM L=150 MM - TANDEM L=150 MM | 227-0722-0 |
|---|---|---|---|

| scm | SUPERSET XL | TANDEM L=220 MM - (p.20,06,2007)<br>TANDEM L=220 MM - TANDEM L=220 MM<br>TANDEM L=220 MM - TANDEM L=220 MM | 227-0723-0 |
|---|---|---|---|

| N | P | C | CODICE | Q.TY | DENOMINAZIONE | DESCRIPTION | DESIGNATION | BEZEICHNUNG | DENOMINACION |
|---|---|---|---|---|---|---|---|---|---|
| | 01.01.1901 -> 01.01.3000 | | | | Note: 2822740380H | | | | |
| | 1 | | 0510140009B | 1.00 | SUPPORTO | SUPPORT | SUPPORT | STUETZE | SOPORTE |
| | 2 | | 0321940805H | 1.00 | PERNO | PIN | PIVOT | BOLZEN | PERNO |
| | 3 | | 0719412602C | 1.00 | MANIGLIA | HANDLE | POIGNEE | HANDGRIFF | MANIJA |
| | 4 | | 0000304489E | 1.00 | VITE | SCREW | VIS | SCHRAUBE | TORNILLO |
| | 5 | | 0321940802B | 1.00 | BIELLA | CONNECTING ROD | BIELLE | PLEUELSTANGE | BIELA |
| | 6 | | 0000301559A | 1.00 | GHIERA | RING NUT | EMBOUT | NUTMUTTER | COLLAR |
| | 7 | | 0321940803D | 1.00 | PERNO | PIN | PIVOT | BOLZEN | PERNO |
| | 8 | | 0321940807C | 1.00 | PERNO | PIN | PIVOT | BOLZEN | PERNO |
| | 9 | | 0000301429E | 1.00 | GHIERA | RING NUT | EMBOUT | NUTMUTTER | COLLAR |
| | 10 | | 0321940801L | 1.00 | TESTATA | HEAD | TETE | KOPF | CABEZAL |
| | 11 | | 0316332636C | 1.00 | PASTIGLIA | PAD | PASTILLE | BELAG | PASTILLA |
| | 12 | | 0319016123G | 1.00 | POMOLO | BALL GRIP | POIGNEE | KUGELGRIFF | POMO |
| | 13 | | 0321940804F | 1.00 | ROSETTA | WASHER | RONDELLE | SCHEIBE | ARANDELA |
| | 14 | | 0721940808D | 1.00 | CILINDRO PNEUMATICO | PNEUMATIC CYLINDER | CYLINDRE PNEUMATIQUE | PNEUMATIKZYLINDER | CILINDRO NEUMATICO |
| | 15 | | 0321940806A | 1.00 | PERNO | PIN | PIVOT | BOLZEN | PERNO |

227-0723

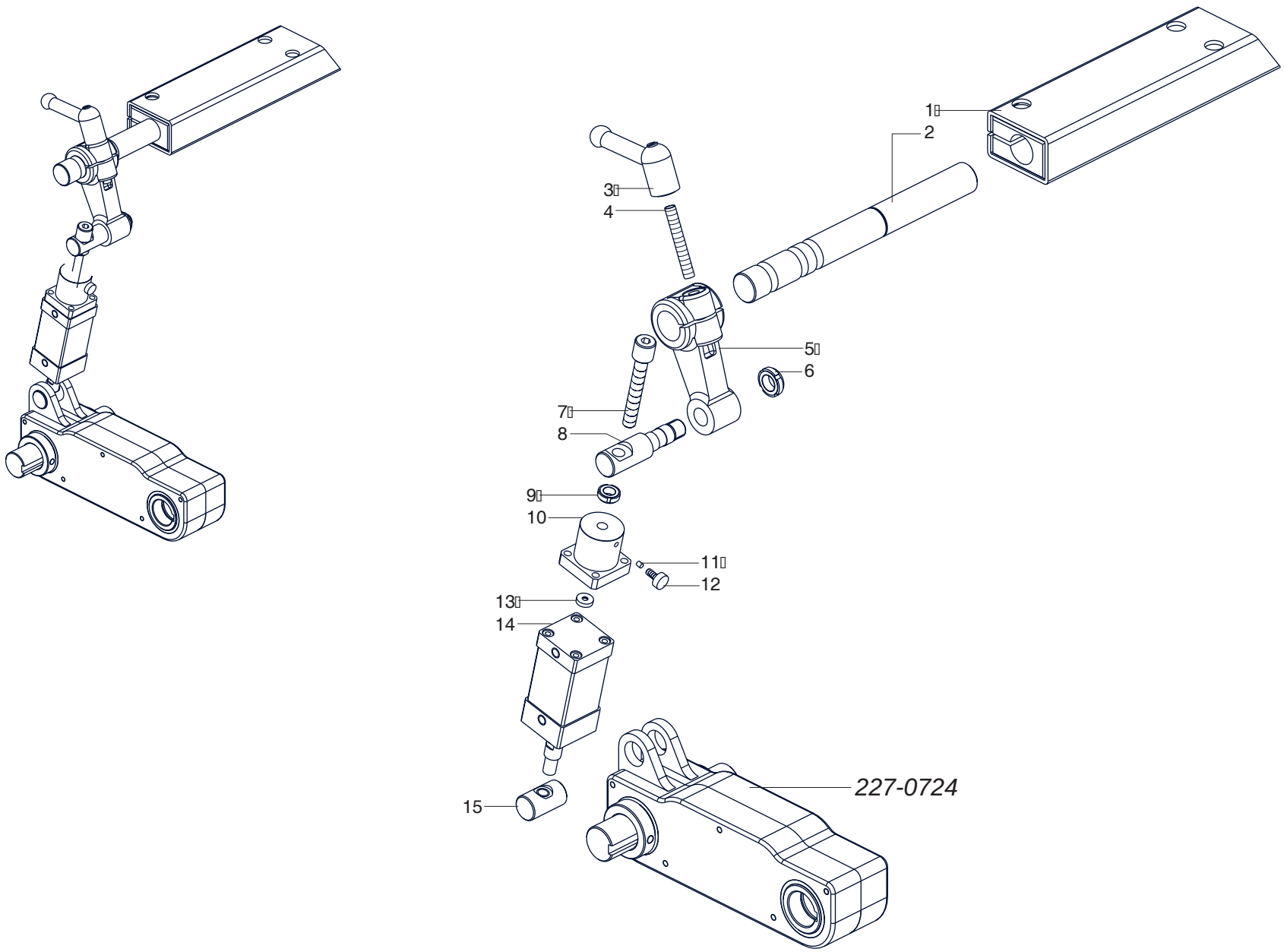


| | | | |
|---|---|---|---|
| scm | SUPERSET XL | TANDEM L=220 MM - (01.01.1901 -> - p.20,06,2007)<br>TANDEM L=220 MM - TANDEM L=220 MM<br>TANDEM L=220 MM - TANDEM L=220 MM | 227-0723-0 |

| N | P | C | CODICE | Q.TY | DENOMINAZIONE | DESCRIPTION | DESIGNATION | BEZEICHNUNG | DENOMINACION |
|---|---|---|---|---|---|---|---|---|---|
| | 01.01.1901 -> 01.01.3000 | | | | Note: 2822740380H | | | | |
| | 1 | | 2722701004B | 1.00 | CHIAVETTA | KEY | CLAVETTE | KEIL | CHAVETA |
| | 2 | | 0322740015B | 1.00 | RUOTA DENTATA | GEAR WHEEL | ROUE DENTEE | ZAHNRAD | RUEDA DENTADA |
| | 3 | | 0001308846L | 1.00 | FINECORSA PER CILINDRO | LIMIT SWITCH | FIN DE COURSE | ENDSCHALTER | FIN CARRERA |
| | 4 | | 0001509058A | 1.00 | SUPPORTO | SUPPORT | SUPPORT | STUETZE | SOPORTE |
| | 5 | | 0522740396D | 1.00 | SUPPORTO | SUPPORT | SUPPORT | STUETZE | SOPORTE |
| | 6 | | 0000301559A | 1.00 | GHIERA | RING NUT | EMBOUT | NUTMUTTER | COLLAR |
| | 7 | | 0321940803D | 1.00 | PERNO | PIN | PIVOT | BOLZEN | PERNO |
| | 8 | | 0321940807C | 1.00 | PERNO | PIN | PIVOT | BOLZEN | PERNO |
| | 9 | | 0000301429E | 1.00 | GHIERA | RING NUT | EMBOUT | NUTMUTTER | COLLAR |
| | 10 | | 0321940801L | 1.00 | TESTATA | HEAD | TETE | KOPF | CABEZAL |
| | 11 | | 0316332636C | 1.00 | PASTIGLIA | PAD | PASTILLE | BELAG | PASTILLA |
| | 12 | | 0319016123G | 1.00 | POMOLO | BALL GRIP | POIGNEE | KUGELGRIFF | POMO |
| | 13 | | 0321940804F | 1.00 | ROSETTA | WASHER | RONDELLE | SCHEIBE | ARANDELA |
| | 14 | | 0001501373L | 1.00 | CILINDRO PNEUMATICO | PNEUMATIC CYLINDER | CYLINDRE PNEUMATIQUE | PNEUMATIKZYLINDER | CILINDRO NEUMATICO |
| | 15 | | 0321940806A | 1.00 | PERNO | PIN | PIVOT | BOLZEN | PERNO |
| | 16 | | 0522740397F | 1.00 | SUPPORTO | SUPPORT | SUPPORT | STUETZE | SOPORTE |

2270723x

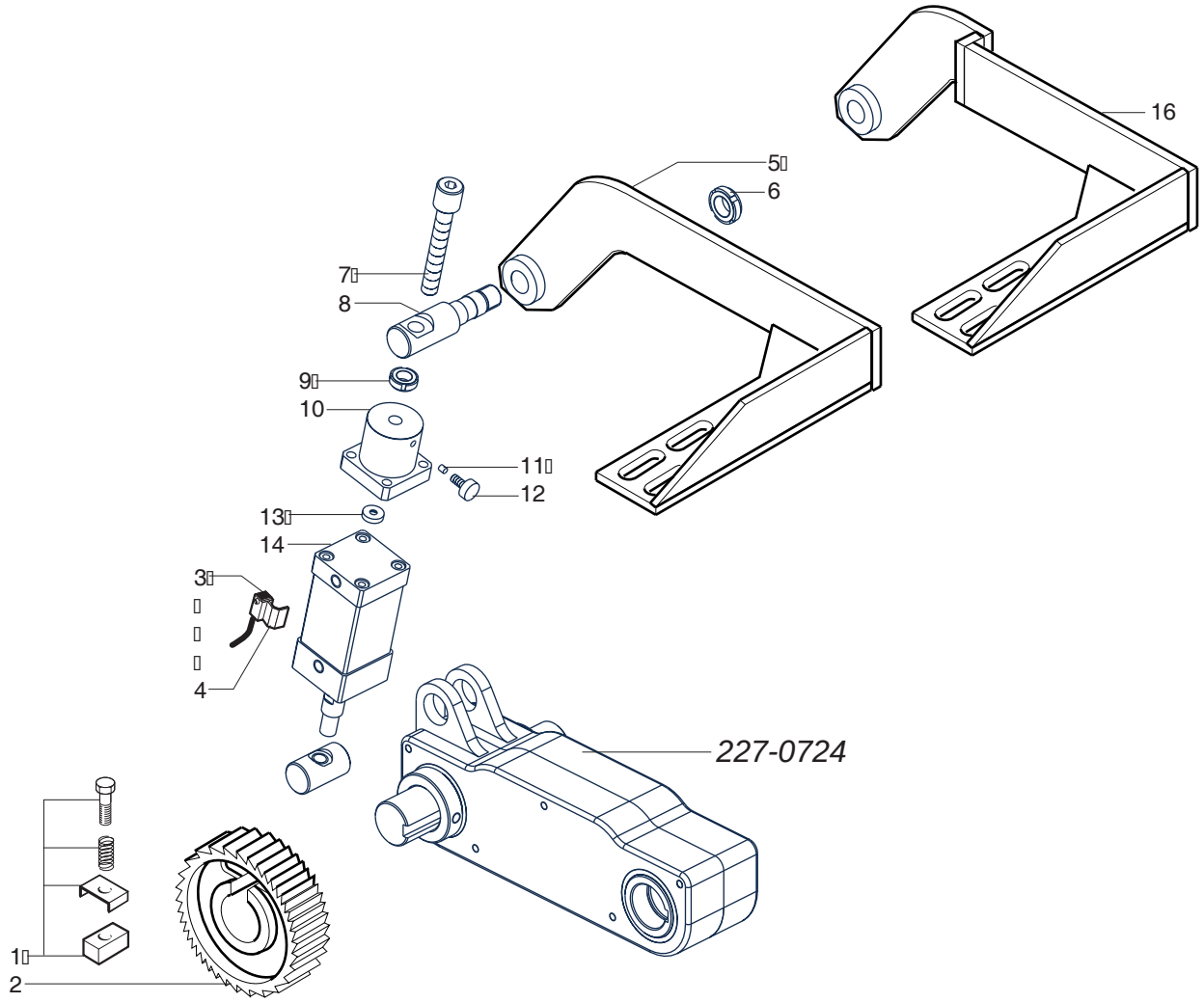


| | | | |
|---|---|---|---|
| scm | SUPERSET XL | TANDEM L=220 MM - (01.01.1901 -> - p.20,06,2007)<br>TANDEM L=220 MM - TANDEM L=220 MM<br>TANDEM L=220 MM - TANDEM L=220 MM | 227-0723-X |

| scm | SUPERSET XL | TANDEM L=200 MM - (p.20,06,2007)<br>TANDEM L=200 MM - TANDEM L=200 MM<br>TANDEM L=200 MM - TANDEM L=200 MM | 227-0724-0 |
|---|---|---|---|

| N | P | C | CODICE | Q.TY | DENOMINAZIONE | DESCRIPTION | DESIGNATION | BEZEICHNUNG | DENOMINACION |
|---|---|---|---|---|---|---|---|---|---|
| | 01.01.1901 -> 01.01.3000 | | | | Note: 2822740385L | | | | |
| | 1 | | 0321940815L | 2.00 | ANELLO | RING | BAGUE | RING | ANILLO |
| | 2 | | 0310140102D | 1.00 | SEMISCATOLA | HALF BOX | DEMIBOITE | HALBKASTEN | SEMICAJA |
| | 3 | | 0000609309C | 4.00 | ASTUCCIO A RULLINI | ROLLER CASING | ETUI A ROULEAUX | WALZENBUECHSE | COJINETE |
| | 4 | | 0000613046L | 8.00 | RALLA | WASHER | CRAPAUDINE | SCHEIBE | RANGUA |
| | 5 | | 0000613502G | 4.00 | GABBIA A RULLINI | ROLLER CAGE | CAGE A ROULEAUX | WALZENKAEFIG | COJINETE |
| | 6 | | 0321940816B | 4.00 | ANELLO ELASTICO | SPRING RING | BAGUE POUR GAINE | FEDERRING | ANILLO ELASTICO |
| | 7 | | 0321940814G | 2.00 | LINGUETTA | FEATHER KEY | LANGUETTE | FEDERKEIL | LINGUETA |
| | 8 | | 0321940813E | 2.00 | RUOTA DENTATA | GEAR WHEEL | ROUE DENTEE | ZAHNRAD | RUEDA DENTADA |
| | 9 | | 0310140104H | 3.00 | INGRANAGGIO | GEAR | ENGRENAGE | ZAHNRAD | ENGRANAJE |
| | 10 | | 0000609101A | 3.00 | ASTUCCIO A RULLINI | ROLLER CASING | ETUI A ROULEAUX | WALZENBUECHSE | COJINETE |
| | 11 | | 0321940818F | 3.00 | PERNO | PIN | PIVOT | BOLZEN | PERNO |
| | 12 | | 0000704016F | 4.00 | GUARNIZIONE O-R | O-RING | O-RING | O-RING | O-RING |
| | 13 | | 0310140103F | 1.00 | SEMISCATOLA | HALF BOX | DEMIBOITE | HALBKASTEN | SEMICAJA |
| | 14 | | 0319443106L | 1.00 | ALBERO | SHAFT | ARBRE | WELLE | EJE |

227-0724

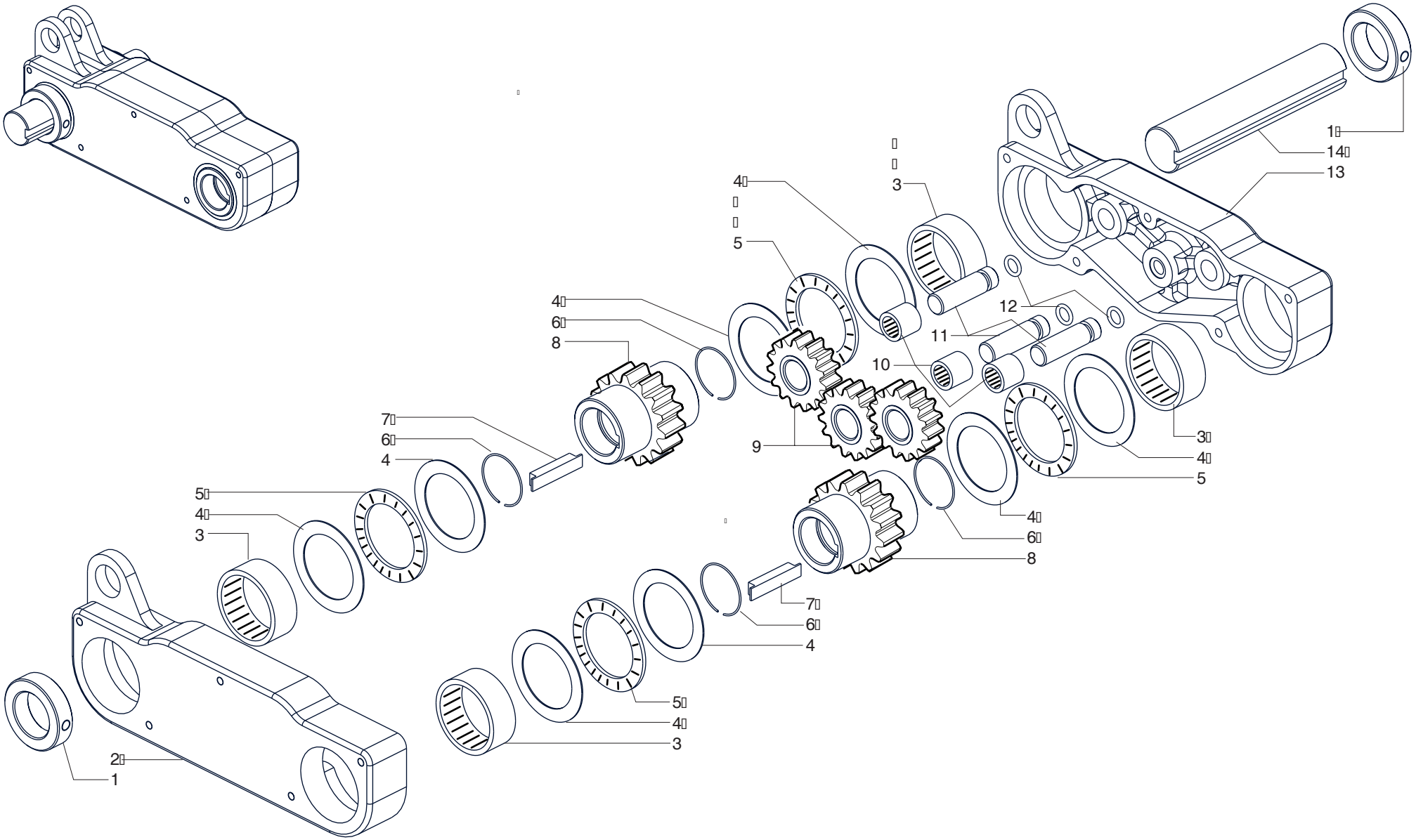


| | | | |
|---|---|---|---|
| scm | SUPERSET XL | TANDEM L=200 MM - (01.01.1901 -> - p.20,06,2007)<br>TANDEM L=200 MM - TANDEM L=200 MM<br>TANDEM L=200 MM - TANDEM L=200 MM | 227-0724-0 |

| scm | SUPERSET XL | BATTUTA ESCLUDIBILE PER TTL - (p.20,06,2007)<br>DISAPPEARING STOP FOR TTL - BUTEE A DISPARITION<br>VERSCHWINDUNGSANSCHLALG FUER TTL - TOPE EXCLUIBLE PARA TTL | 227-0725-0 |
|---|---|---|---|

| N | P | C | CODICE | Q.TY | DENOMINAZIONE | DESCRIPTION | DESIGNATION | BEZEICHNUNG | DENOMINACION |
|---|---|---|---|---|---|---|---|---|---|
| | 01.01.1901 -> 01.01.3000 | | | | Note: 2822740312E | | | | |
| 1 | | | 0510140009B | 1.00 | SUPPORTO | SUPPORT | SUPPORT | STUETZE | SOPORTE |
| 2 | | | 0321940805H | 1.00 | PERNO | PIN | PIVOT | BOLZEN | PERNO |
| 3 | | | 0719412602C | 1.00 | MANIGLIA | HANDLE | POIGNEE | HANDGRIFF | MANIJA |
| 4 | | | 0000304489E | 1.00 | VITE | SCREW | VIS | SCHRAUBE | TORNILLO |
| 5 | | | 0321940802B | 1.00 | BIELLA | CONNECTING ROD | BIELLE | PLEUELSTANGE | BIELA |
| 6 | | | 0000301559A | 1.00 | GHIERA | RING NUT | EMBOUT | NUTMUTTER | COLLAR |
| 7 | | | 0310140110A | 1.00 | PERNO | PIN | PIVOT | BOLZEN | PERNO |
| 8 | | | 0321940807C | 1.00 | PERNO | PIN | PIVOT | BOLZEN | PERNO |
| 9 | | | 0000301429E | 1.00 | GHIERA | RING NUT | EMBOUT | NUTMUTTER | COLLAR |
| 10 | | | 0321940801L | 1.00 | TESTATA | HEAD | TETE | KOPF | CABEZAL |
| 11 | | | 0316332636C | 1.00 | PASTIGLIA | PAD | PASTILLE | BELAG | PASTILLA |
| 12 | | | 0319016123G | 1.00 | POMOLO | BALL GRIP | POIGNEE | KUGELGRIFF | POMO |
| 13 | | | 0321940804F | 1.00 | ROSETTA | WASHER | RONDELLE | SCHEIBE | ARANDELA |
| 14 | | | 0721940808D | 1.00 | CILINDRO PNEUMATICO | PNEUMATIC CYLINDER | CYLINDRE PNEUMATIQUE | PNEUMATIKZYLINDER | CILINDRO NEUMATICO |
| 15 | | | 0521930455G | 1.00 | PROTEZIONE | GUARD | PROTECTION | ABDECKUNG | PROTECCION |
| 16 | | | 0000644074F | 2.00 | ANELLO | RING | BAGUE | RING | ANILLO |
| 17 | | | 0000606205H | 2.00 | CUSCINETTO | BEARING | ROULEMENT | LAGER | COJINETE |
| 18 | | | 0321930456E | 1.00 | ANELLO | RING | BAGUE | RING | ANILLO |
| 19 | | | 0000644292H | 1.00 | ANELLO RASCHIATORE | SCRAPING RING | BAGUE DE RACLAGE | ABSTREIFRING | ANILLO RASCADOR |
| 20 | | | 0321940806A | 1.00 | PERNO | PIN | PIVOT | BOLZEN | PERNO |

227-0725

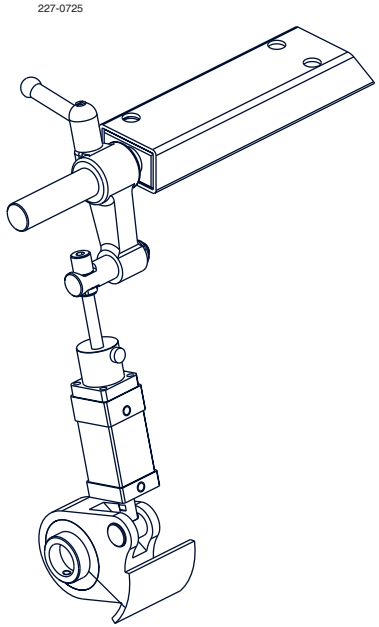

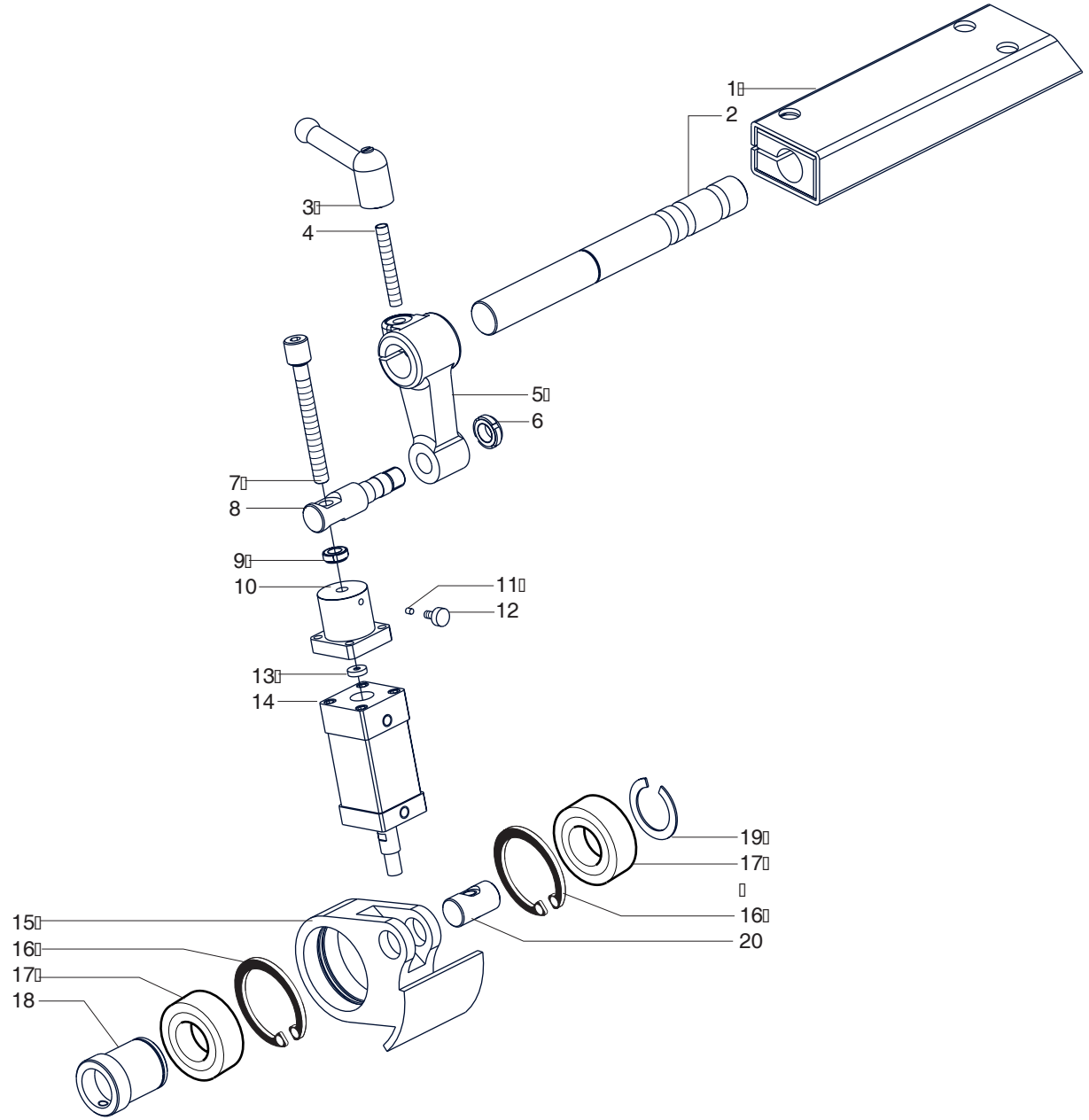


| scm | SUPERSET XL | BATTUTA ESCLUDIBILE PER TTL - (01.01.1901 -> - p.20,06,2007)<br>DISAPPEARING STOP FOR TTL - BUTEE A DISPARITION<br>VERSCHWINDUNGSANSCHLALG FUER TTL - TOPE EXCLUIBLE PARA TTL | 227-0725-0 |
|---|---|---|---|

| scm | SUPERSET XL | PRESSORE - (p.20,06,2007)<br>PRESSURE WHEEL - PRESSEUR A ROUE<br>DRUKRAD - PRENSOR | 227-0727-0 |
|---|---|---|---|

| N | P | C | CODICE | Q.TY | DENOMINAZIONE | DESCRIPTION | DESIGNATION | BEZEICHNUNG | DENOMINACION |
|---|---|---|---|---|---|---|---|---|---|
| | 01.01.1901 -> 01.01.3000 | | | | Note: 2822740375H | | | | |
| | 1 | | 0316081600C | 1.00 | MANOPOLA | HAND GRIP | POIGNEE | GRIFF | MANOPLA |
| | 2 | | 0316081500A | 1.00 | MOLLA | SPRING | RESSORT | FEDER | RESORTE |
| | 3 | | 0316081401A | 1.00 | CILINDRO | CYLINDER | CYLINDRE | ZYLINDER | CILINDRO |
| | 4 | | 0319480106E | 1.00 | SUPPORTO | SUPPORT | SUPPORT | STUETZE | SOPORTE |
| | 5 | | 0316085500E | 1.00 | PERNO | PIN | PIVOT | BOLZEN | PERNO |
| | 6 | | 0000306262E | 1.00 | SPINA | PIN | GOUPILLE | STIFT | REMACHE |
| | 7 | | 0319480113L | 1.00 | DISTANZIALE | SPACER | ENTRETOISE | DISTANZSTUECK | DISTANCIADOR |
| | 8 | | 0719480112F | 1.00 | RUOTA PRESSATRICE | WHEEL | ROUE | RAD | RUEDA PRENSORA |
| | 9 | | 0000305230F | 1.00 | ROSETTA | WASHER | RONDELLE | SCHEIBE | ARANDELA |
| | 10 | | 0000310245E | 1.00 | VITE | SCREW | VIS | SCHRAUBE | TORNILLO |
| | 100 | | 2710103700H | 1.00 | PRESSATORE | PRESSER | PRESSEUR | DRUCKELEMENT | PRENSADOR |

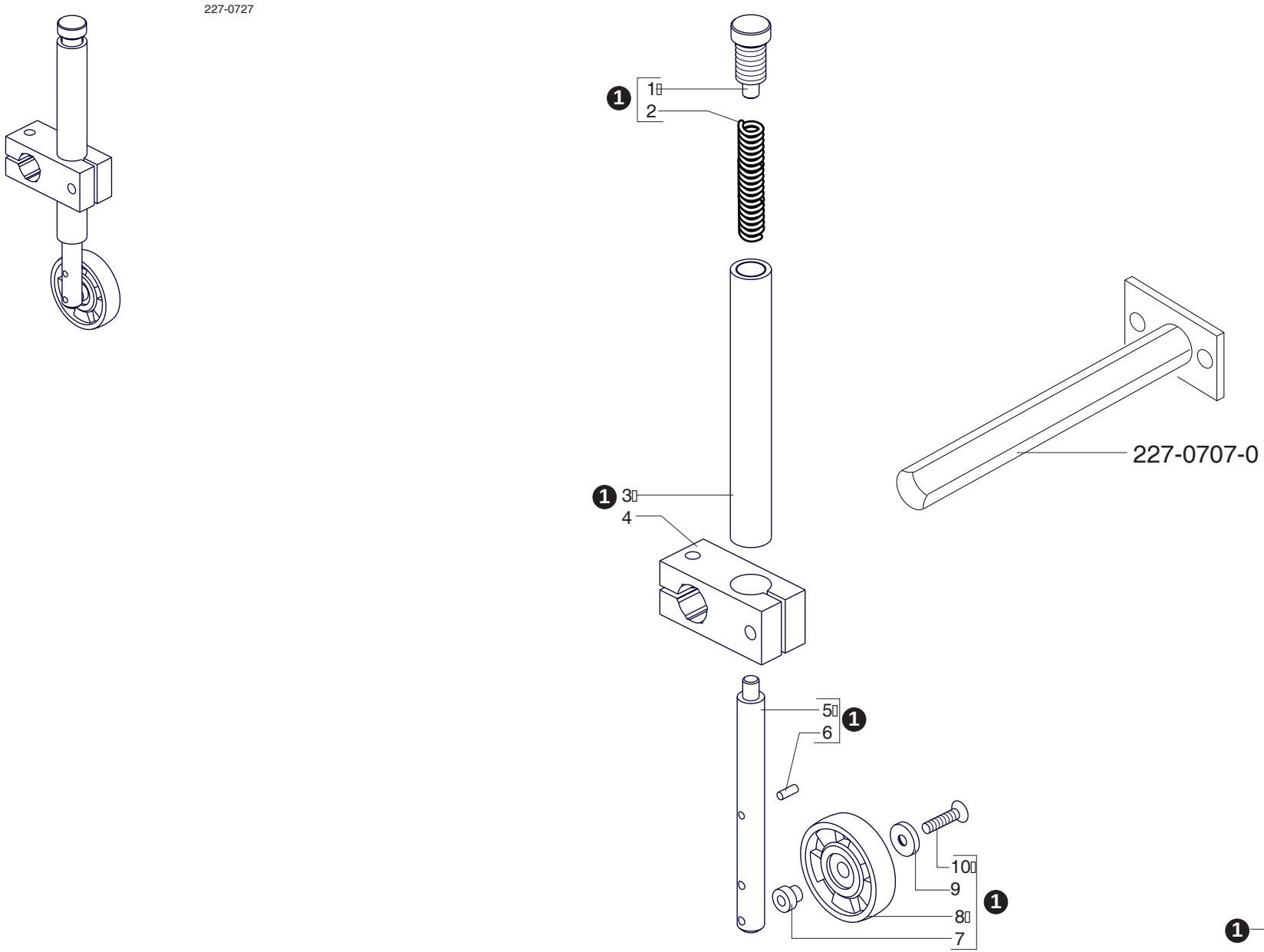


| | | | |
|---|---|---|---|
| scm | SUPERSET XL | PRESSORE - (01.01.1901 ->  - p.20,06,2007)<br>PRESSURE WHEEL - PRESSEUR A ROUE<br>DRUKRAD - PRENSOR | 227-0727-0 |

| scm | SUPERSET XL | RUOTE PRESSATORI PER UNIVERSALE - (p.20,06,2007)<br>PRESSURE WHEELS FOR UNIVERSAL SPINDLE - PRESSEURS A ROUE ARBRE UNIVERSAL<br>DRUKRAEDER FEUR UNIVERSALWELLE - PRENSORES PARA UNIVERSAL | 227-0728-0 |
|---|---|---|---|

| N | P | C | CODICE | Q.TY | DENOMINAZIONE | DESCRIPTION | DESIGNATION | BEZEICHNUNG | DENOMINACION |
|---|---|---|---|---|---|---|---|---|---|
| | 01.01.1901 -> 01.01.3000 | | | | Note: 2822740390L | | | | |
| | 1 | | 2710103700H | 3.00 | PRESSATORE | PRESSER | PRESSEUR | DRUCKELEMENT | PRENSADOR |
| | 2 | | 0319480106E | 5.00 | SUPPORTO | SUPPORT | SUPPORT | STUETZE | SOPORTE |
| | 3 | | 0522740041A | 3.00 | SUPPORTO | SUPPORT | SUPPORT | STUETZE | SOPORTE |
| | 4 | | 0322740042H | 1.00 | BARRA | BAR | BARRE | STANGE | BARRA |
| | 5 | | 0319480105C | 2.00 | BARRA ESAGONALE | BAR | BARRE | STANGE | BARRA |

227-0728

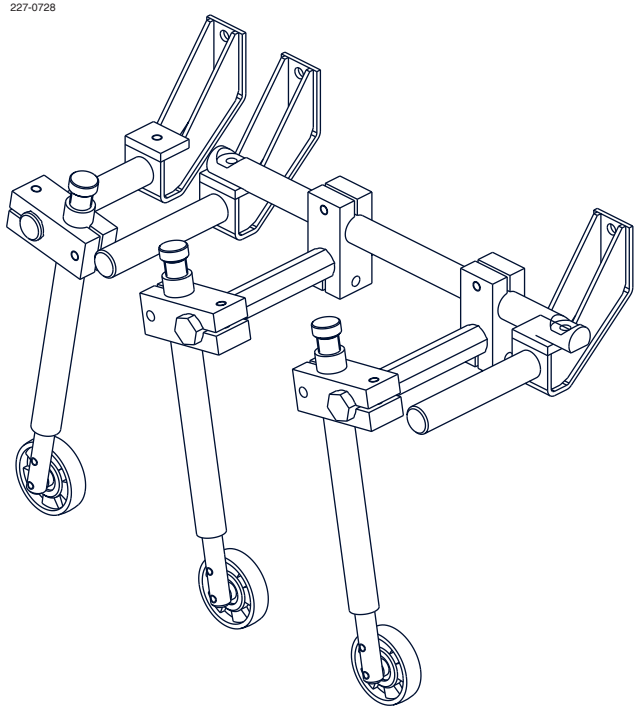

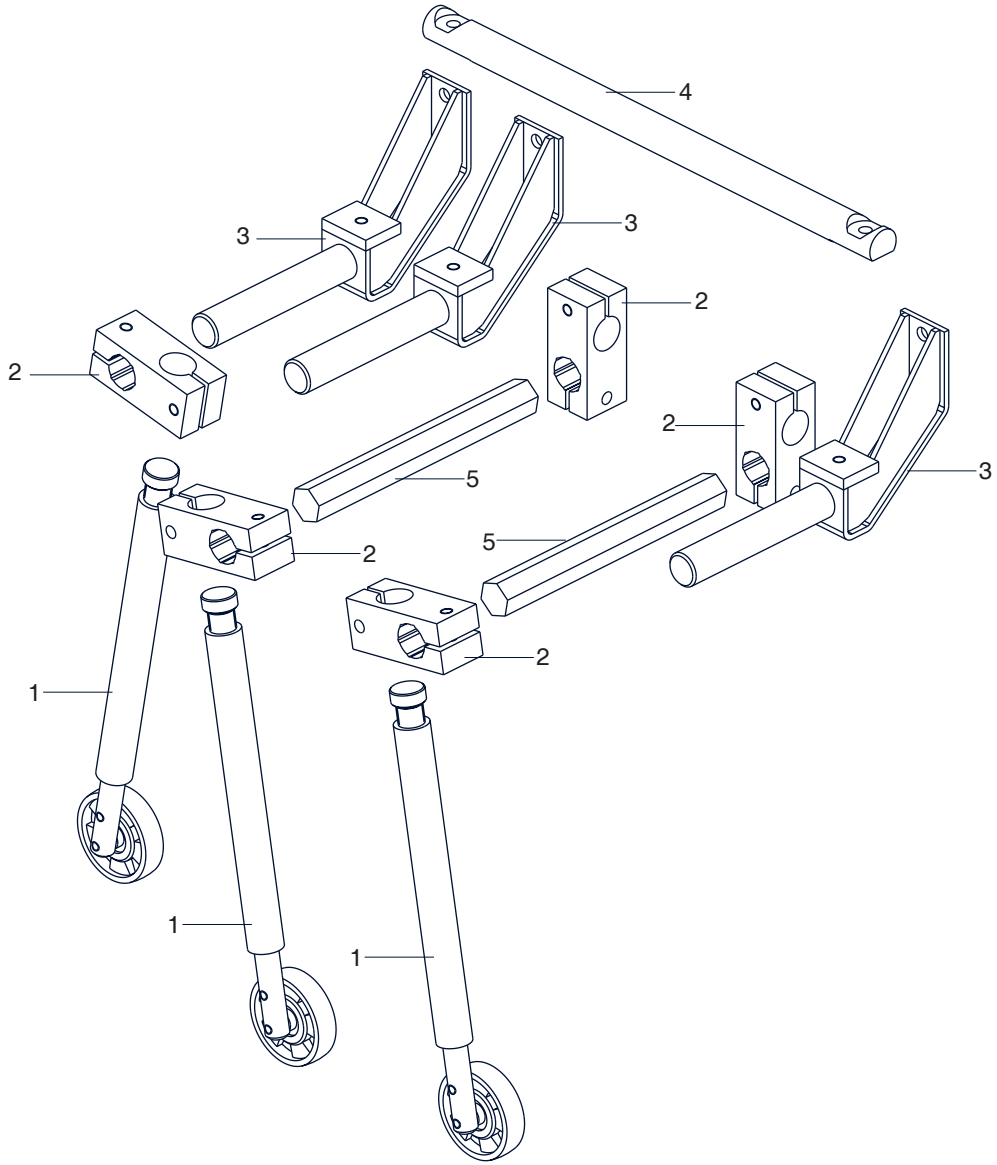


| | | | |
|---|---|---|---|
| scm | SUPERSET XL | RUOTE PRESSATORI PER UNIVERSALE - (01.01.1901 -> - p.20,06,2007)<br>PRESSURE WHEELS FOR UNIVERSAL SPINDLE - PRESSEURS A ROUE ARBRE UNIVERSAL<br>DRUKRAEDER FEUR UNIVERSALWELLE - PRENSORES PARA UNIVERSAL | 227-0728-0 |

| scm | SUPERSET XL | COLONNA - (p.20,06,2007)<br>COLUMN - MONTANT<br>SAEULE - COLUMNA | 227-0730-0 |
|---|---|---|---|

| N | P | C | CODICE | Q.TY | DENOMINAZIONE | DESCRIPTION | DESIGNATION | BEZEICHNUNG | DENOMINACION |
|---|---|---|---|---|---|---|---|---|---|
| | 01.01.1901 -> 01.01.3000 | | | | Note: 2822740170C | | | | |
| 1 | | | 0522740143G | 1.00 | COLONNA | COLUMN | COLONNE | STAENDER | COLUMNA |
| 1 | | | 0522740161E | 1.00 | COLONNA | COLUMN | COLONNE | STAENDER | COLUMNA |
| 1 | | | 0522740162G | 1.00 | COLONNA | COLUMN | COLONNE | STAENDER | COLUMNA |
| 2 | | | 0001904155E | 2.00 | RACC.RAP. DIR.M | FAST INSERT FITTING (STRA | RACCORD RAP. DROIT M | SCHNELLANSCHLUSS (GERADE | EMP.ATAQ.RAPIDO DER.M |
| 3 | | | 0322730111C | 1.00 | LARDONE | GIB | CONTRE-FER | STELLEISTE | CHAVETA |
| 4 | | | 0000301363D | 3.00 | DADO | NUT | ECROU | MUTTER | TUERCA |
| 5 | | | 0000316312D | 3.00 | PRIGIONIERO | STUD BOLT | PRISONNIER | STIFTSCHRAUBE | TORNILLO S.CAB. |
| 6 | | | 0322710110F | 1.00 | STAFFA | BRACKET | BRIDE | BUEGEL | ABRAZADERA |
| 6 | | | 0322710120G | 1.00 | STAFFA | BRACKET | BRIDE | BUEGEL | ABRAZADERA |
| 7 | | | 0321940227B | 1.00 | MADREVITE | NUT SCREW | VIS-MERE | MUTTERGEWINDE | TUERCA |
| 8 | | | 0000616033E | 12.00 | INGRASSATORE (NIPPLO) | GREASE NIPPLE | NIPPLE | SCHMIERNIPPEL | NIPLE ENGRASADOR |
| 9 | | | 0001908005B | 12.00 | RIDUZIONE | REDUCTION | REDUCTION | REDUZIER STUECK | REDUCCION |
| 10 | | | 0322740144E | 1.00 | SUPPORTO | SUPPORT | SUPPORT | STUETZE | SOPORTE |
| 11 | | | 0001347514C | 12.00 | DADO X PRESSACAVO | NUT | ECROU | MUTTER | TUERCA X TOMACAB. |
| 12 | | | 0001904155E | 12.00 | RACC.RAP. DIR.M | FAST INSERT FITTING (STRA | RACCORD RAP. DROIT M | SCHNELLANSCHLUSS (GERADE | EMP.ATAQ.RAPIDO DER.M |
| 13 | | | 0000601224C | 2.00 | BOCCOLA AUTOL. | SELF-LUBRICATING BUSH | DOUILLE AUTOLUBRIFIANTE | SELBSTSCHMIER. BUCHSE | ANILL.AUTOLUB. |
| 14 | | | 0522740185F | 1.00 | COLONNA | COLUMN | COLONNE | STAENDER | COLUMNA |
| 15 | | | 0001347321C | 1.00 | CAMMA TCX-10-34 | CAM | CAME ACTIONNEMENT | TREIBNOCKEN | EXCENT.ACC. |
| 16 | | | 0001347322E | 2.00 | CAMMA TCX-00-24 | CAM | CAME | NOCKEN | EXCENTRICO |
| 17 | | | 0319432704E | 2.00 | GUIDA PORTACAMME | CAM HOLDER GUIDE | GUIDE PORTE-CAMES | NOCKENHALTER | GUIA PORTA EXC. |
| 18 | | | 0522740146D | 1.00 | STAFFA | BRACKET | BRIDE | BUEGEL | ABRAZADERA |
| 18 | | | 0522740158L | 1.00 | STAFFA | BRACKET | BRIDE | BUEGEL | ABRAZADERA |

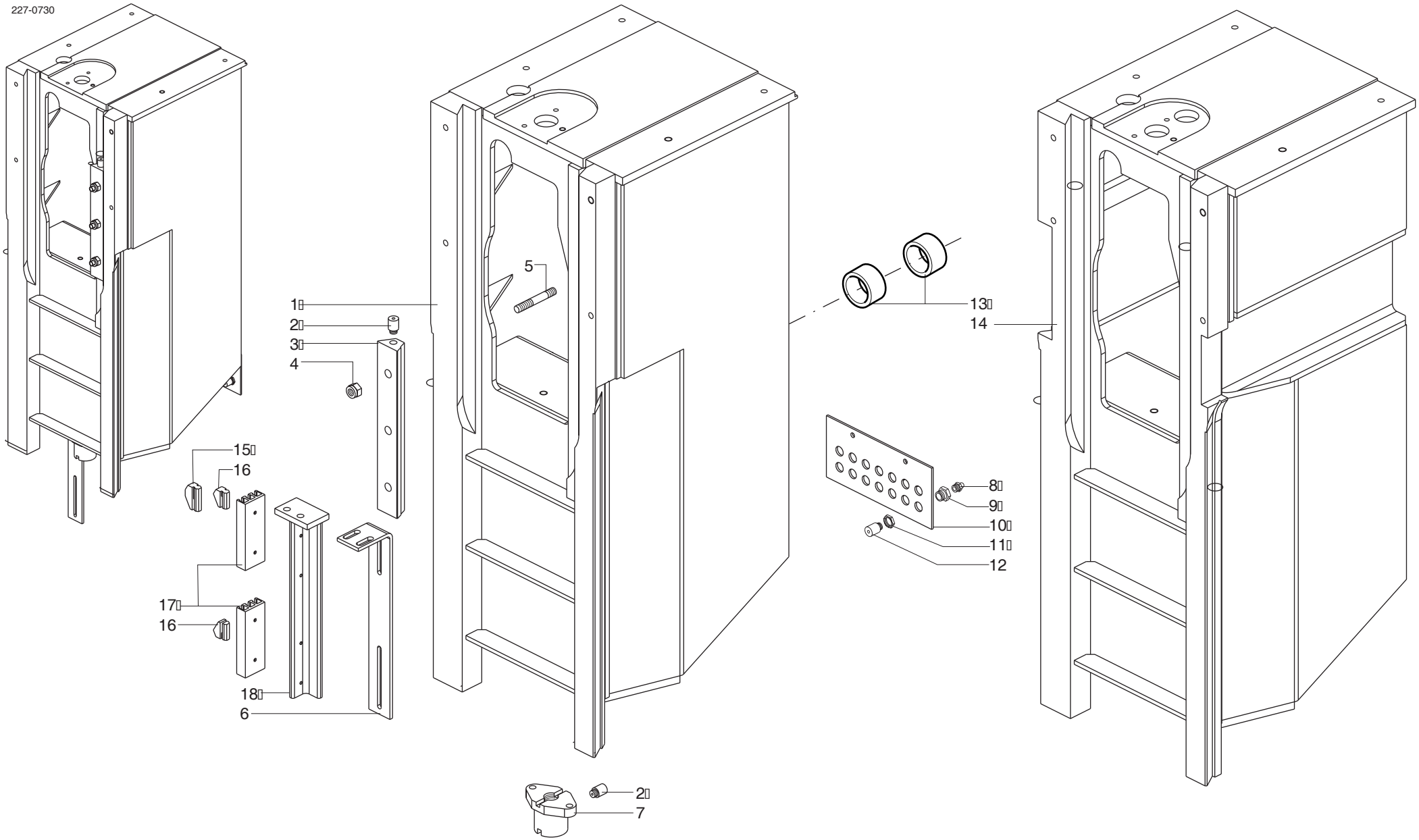


| scm | SUPERSET XL | COLONNA - (01.01.1901 -> - p.20,06,2007)<br>COLUMN - MONTANT<br>SAEULE - COLUMNA | 227-0730-0 |
|---|---|---|---|

| scm | SUPERSET XL | BANDELLA IN ENTRATA (LIMITATORE) - (p.20,06,2007)<br>LIMITING DEVICE (ENTY SIDE) - LIMITEUR (ENTREE)<br>BEGRENZER (EINLAUFSEITE) - LAMINA EN ENTRADA | 227-0731-0 |
|---|---|---|---|

| N | P | C | CODICE | Q.TY | DENOMINAZIONE | DESCRIPTION | DESIGNATION | BEZEICHNUNG | DENOMINACION |
|---|---|---|---|---|---|---|---|---|---|
| | 01.01.1901 -> 01.01.3000 | | | | Note: 2822740310A | | | | |
| | 1 | | 0001307905D | 1.00 | FINECORSA | LIMIT SWITCH | FIN DE COURSE | ENDSCHALTER | FIN CARRERA |
| | 2 | | 2722770117F | 1.00 | BANDELLA | GUARD | PROTECTION | SCHUTZ | BANDA |
| | 2 | | 2722770117F | 1.00 | BANDELLA | GUARD | PROTECTION | SCHUTZ | BANDA |
| | 2 | | 2722770125C | 1.00 | BANDELLA | GUARD | PROTECTION | SCHUTZ | BANDA |
| | 3 | | 0522770116G | 1.00 | COPERCHIO | COVER | COUVERCLE | DECKEL | TAPA |
| | 4 | | 0302110031L | 1.00 | TARGHETTA | RATING PLATE | PLAQUETTE | SCHILD | TARJETA |
| | 5 | | 0302110072F | 1.00 | TARGA | PLATE | PLAQUE | SCHILD | TARJETA |
| | 6 | | 2722770131E | 1.00 | BANDELLA (COMP.31) | GUARD | PROTECTION | SCHUTZ | BANDA |

227-0731

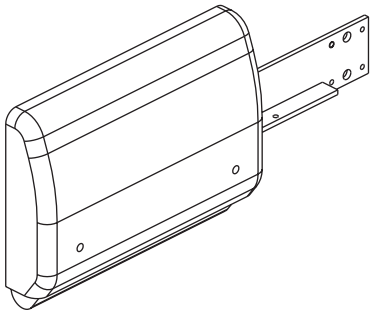



4




5

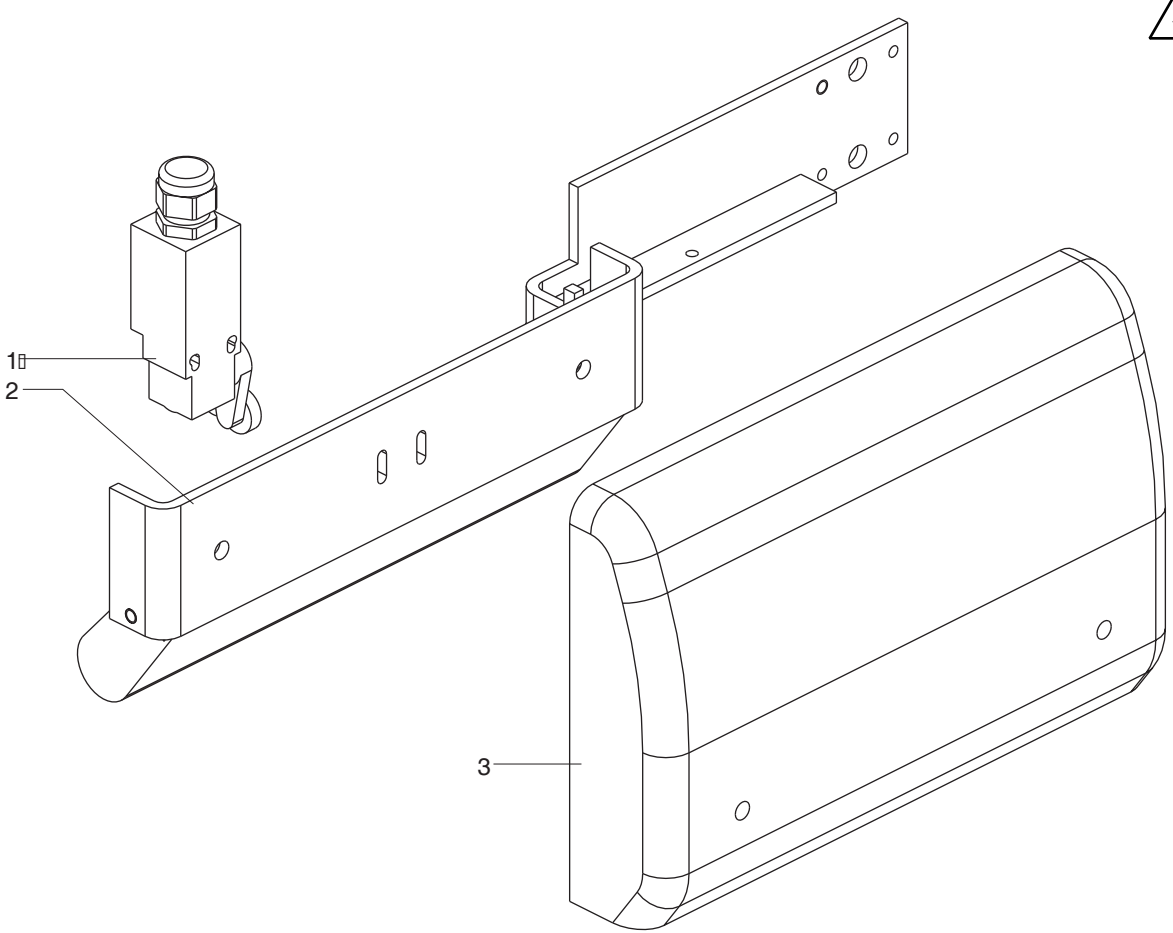


| | | | |
|---|---|---|---|
| scm | SUPERSET XL | BANDELLA IN ENTRATA (LIMITATORE) - (01.01.1901 -> 27.09.2000 - p.20,06,2007)<br>LIMITING DEVICE (ENTY SIDE) - LIMITEUR (ENTREE)<br>BEGRENZER (EINLAUFSEITE) - LAMINA EN ENTRADA | 227-0731-0 |

22707311

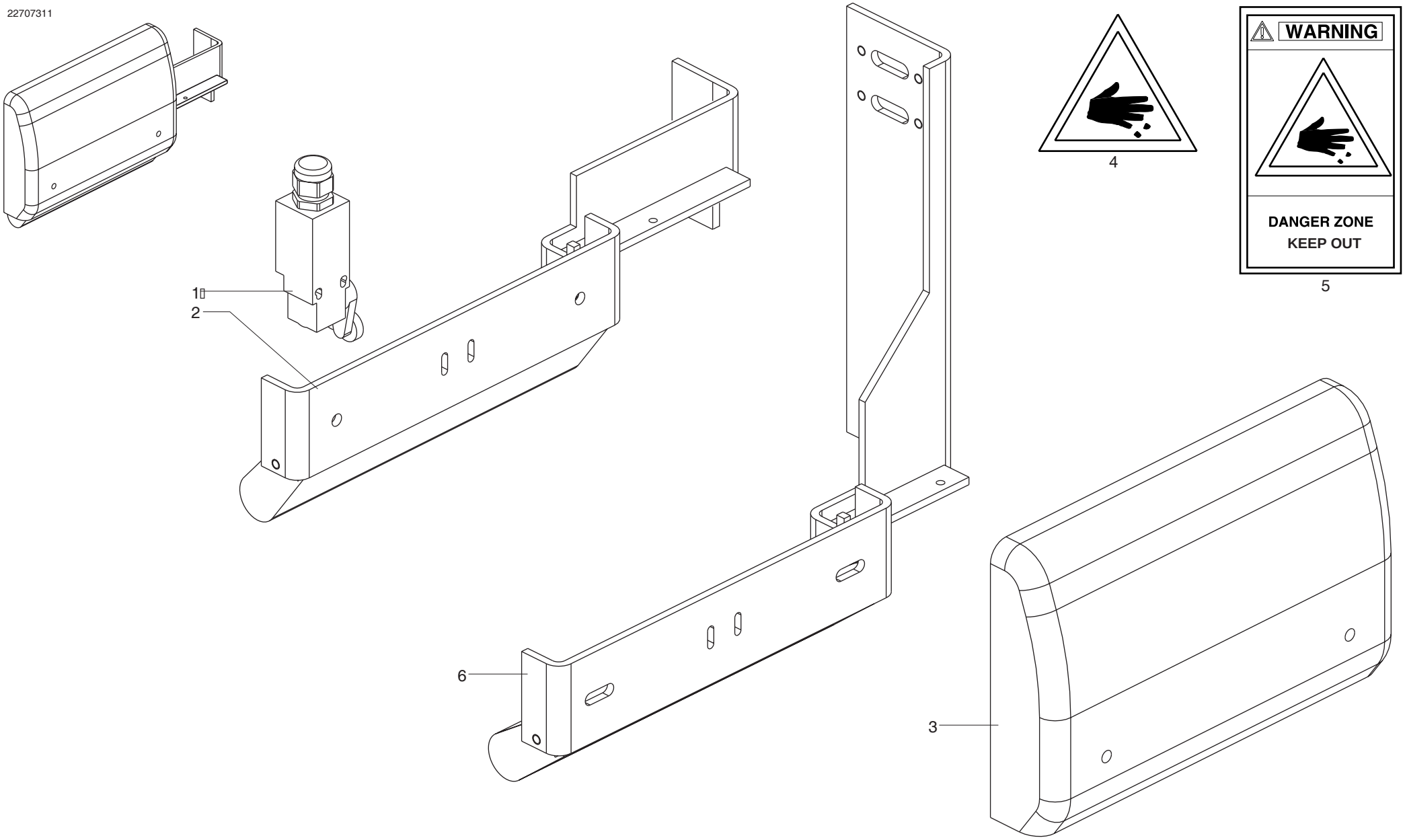


| | | | |
|---|---|---|---|
| scm | SUPERSET XL | BANDELLA IN ENTRATA (LIMITATORE) - (28.09.2000 -> - p.20,06,2007)<br>LIMITING DEVICE (ENTY SIDE) - LIMITEUR (ENTREE)<br>BEGRENZER (EINLAUFSEITE) - LAMINA EN ENTRADA | 227-0731-0 |

| scm | SUPERSET XL | BANDELLA IN ENTRATA CON TTL - (p.20,06,2007)<br>LIMITING DEVICE (ENTRY SIDE) WITH TTL - LIMITEUR ENTREE AVEC TTL<br>BEGRENZER MIT TTL (EINLAUFSEITE) - LAMINA EN ENTRADA CON TTL | 227-0732-0 |
|---|---|---|---|

| N | P | C | CODICE | Q.TY | DENOMINAZIONE | DESCRIPTION | DESIGNATION | BEZEICHNUNG | DENOMINACION |
|---|---|---|---|---|---|---|---|---|---|
| | 01.01.1901 -> 01.01.3000 | | | | Note: 2822740311C | | | | |
| | 1 | | 0321930454A | 1.00 | LASTRA TRASPARENTE | TRANSPARENT PLATE | PLAQUE TRANSPARENTE | TRANSPARENTPLATTE | PLANCHA TRANSPARENTE |
| | 2 | | 0522770122L | 1.00 | BANDELLA | GUARD | PROTECTION | SCHUTZ | BANDA |
| | 3 | | 0522770121G | 1.00 | SUPPORTO | SUPPORT | SUPPORT | STUETZE | SOPORTE |
| | 3 | | 0522770127A | 1.00 | SUPPORTO | SUPPORT | SUPPORT | STUETZE | SOPORTE |
| | 4 | | 0001307905D | 1.00 | FINECORSA | LIMIT SWITCH | FIN DE COURSE | ENDSCHALTER | FIN CARRERA |
| | 5 | | 0522770134E | 1.00 | SUPPORTO | SUPPORT | SUPPORT | STUETZE | SOPORTE |

227-0732

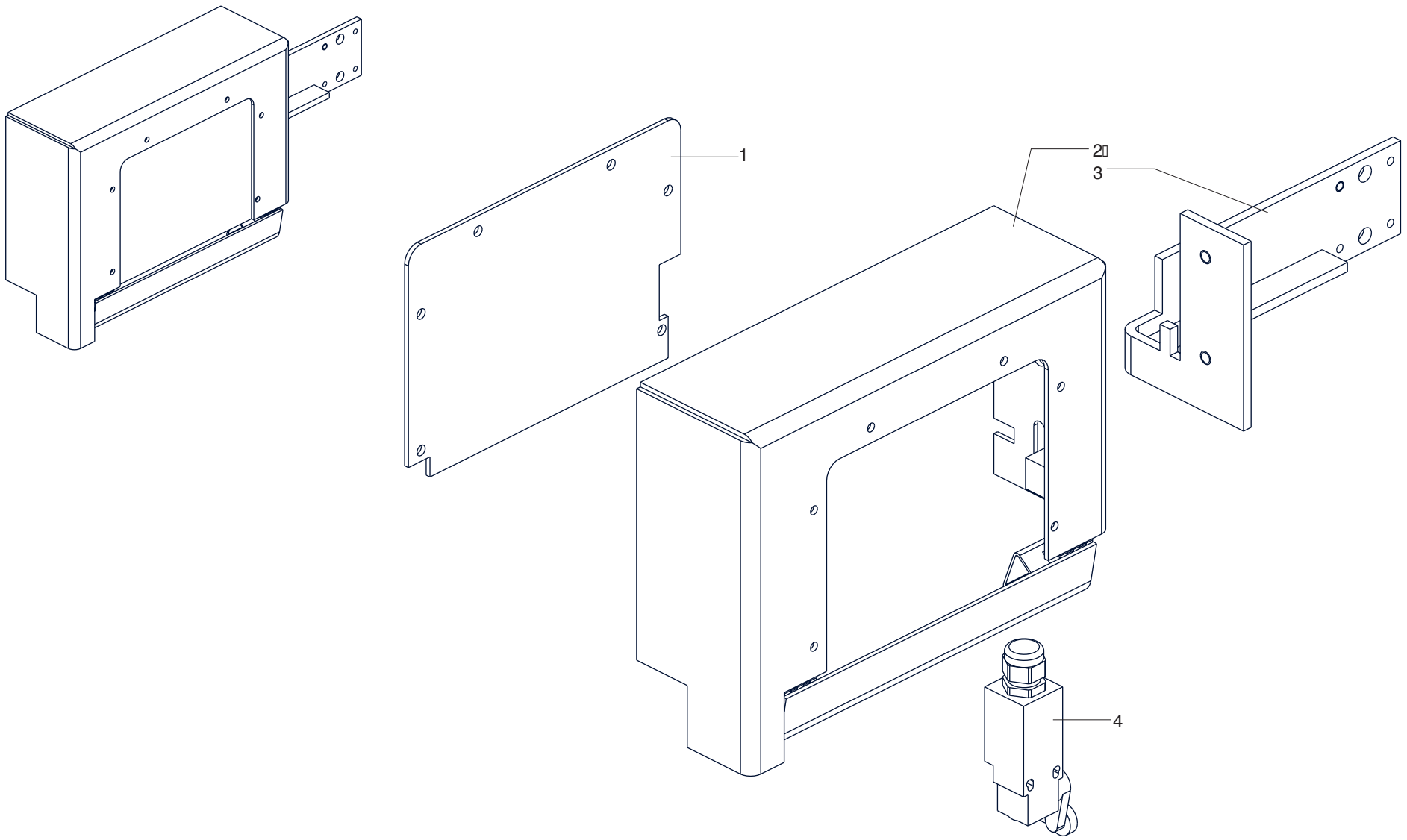


| | | | |
|---|---|---|---|
| scm | SUPERSET XL | BANDELLA IN ENTRATA CON TTL - (01.01.1901 -> 19.10.2000 - p.20,06,2007)<br>LIMITING DEVICE (ENTRY SIDE) WITH TTL - LIMITEUR ENTREE AVEC TTL<br>BEGRENZER MIT TTL (EINLAUFSEITE) - LAMINA EN ENTRADA CON TTL | 227-0732-0 |

22707321

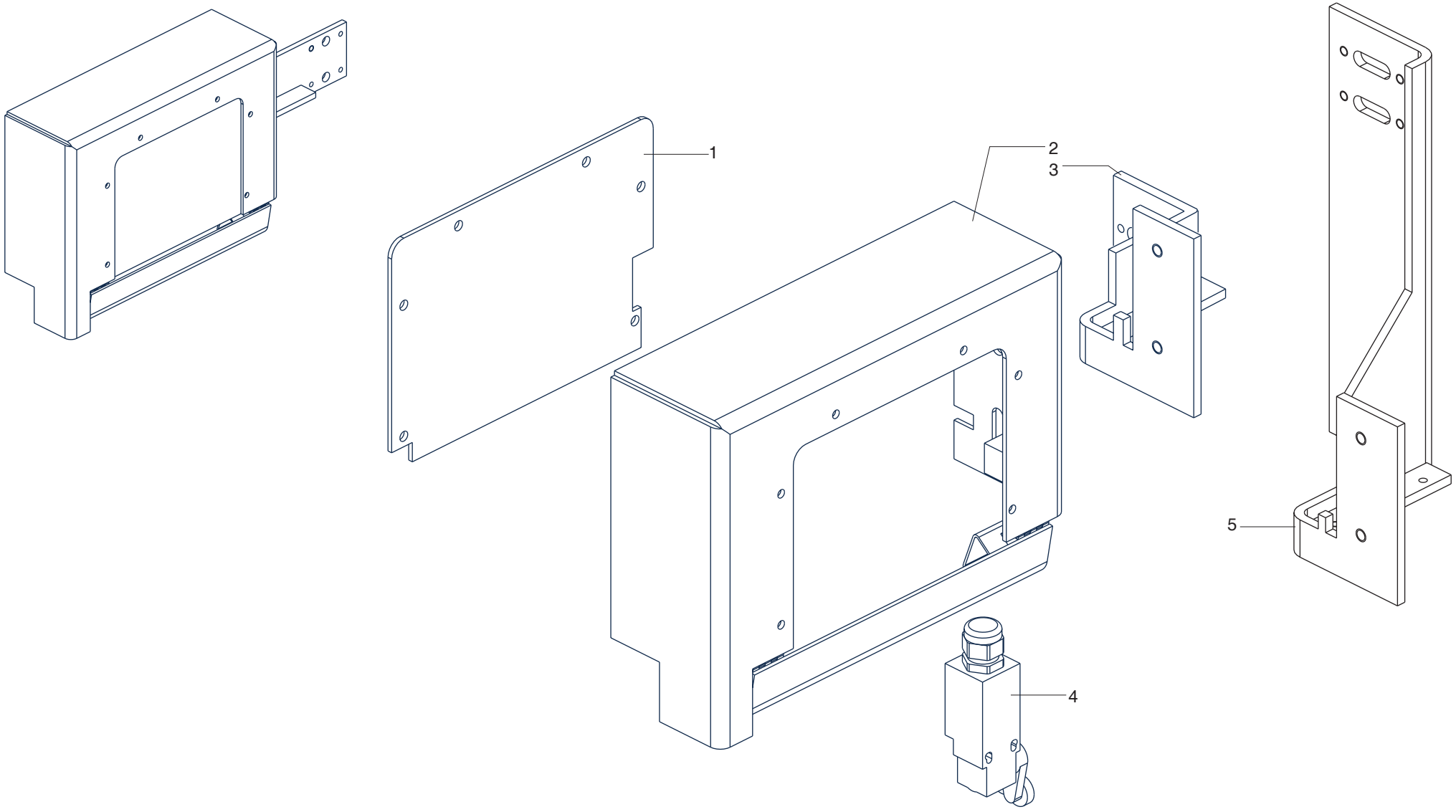


| | | | |
|---|---|---|---|
| scm | SUPERSET XL | BANDELLA IN ENTRATA CON TTL - (20.10.2000 ->  - p.20,06,2007)<br>LIMITING DEVICE (ENTRY SIDE) WITH TTL - LIMITEUR ENTREE AVEC TTL<br>BEGRENZER MIT TTL (EINLAUFSEITE) - LAMINA EN ENTRADA CON TTL | 227-0732-0 |

| scm | SUPERSET XL | DISP. DI SICUREZZA C/MARTELLETTI ANTIRIT - (p.20,06,2007)<br>ANTI-KICKBACK FINGERS UNIT - GROUPE DOIGTS ANTIRECUIL<br>RUECKSCHLAGFINGER - DISP. DE SEGURIDAD C/MARTINETES ANTIREGR | 227-0733-0 |
|---|---|---|---|

| N | P | C | CODICE | Q.TY | DENOMINAZIONE | DESCRIPTION | DESIGNATION | BEZEICHNUNG | DENOMINACION |
|---|---|---|---|---|---|---|---|---|---|
| | 01.01.1901 -> 01.01.3000 | | | | Note: 2822781000C | | | | |
| | 1 | | 0000619669H | 1.00 | MANIGLIA | HANDLE | POIGNEE | HANDGRIFF | MANIJA |
| | 2 | | 0522781003A | 1.00 | SUPPORTO | SUPPORT | SUPPORT | STUETZE | SOPORTE |
| | 3 | | 0322781006C | 1.00 | PERNO | PIN | PIVOT | BOLZEN | PERNO |
| | 4 | | 0000305757E | 36.00 | SPESSORE | SHIM | CALE | BEILAGE | ESPESOR |
| | 5 | | 0322781005A | 33.00 | MARTELLETTO | ANTIKICKBACK FINGER | CLIQUET | RUECKSCHLAGFINGER | MARTINETE |
| | 6 | | 0522781002H | 1.00 | BANDELLA | GUARD | PROTECTION | SCHUTZ | BANDA |
| | 7 | | 0522781004C | 1.00 | SUPPORTO | SUPPORT | SUPPORT | STUETZE | SOPORTE |
| | 8 | | 0321910795L | 1.00 | TARGHETTA | RATING PLATE | PLAQUETTE | SCHILD | TARJETA |

227-0733

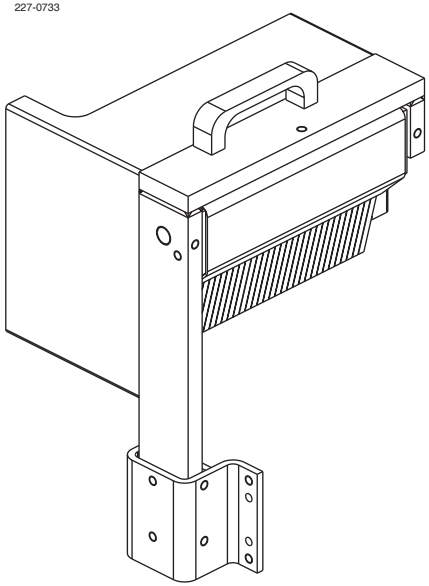

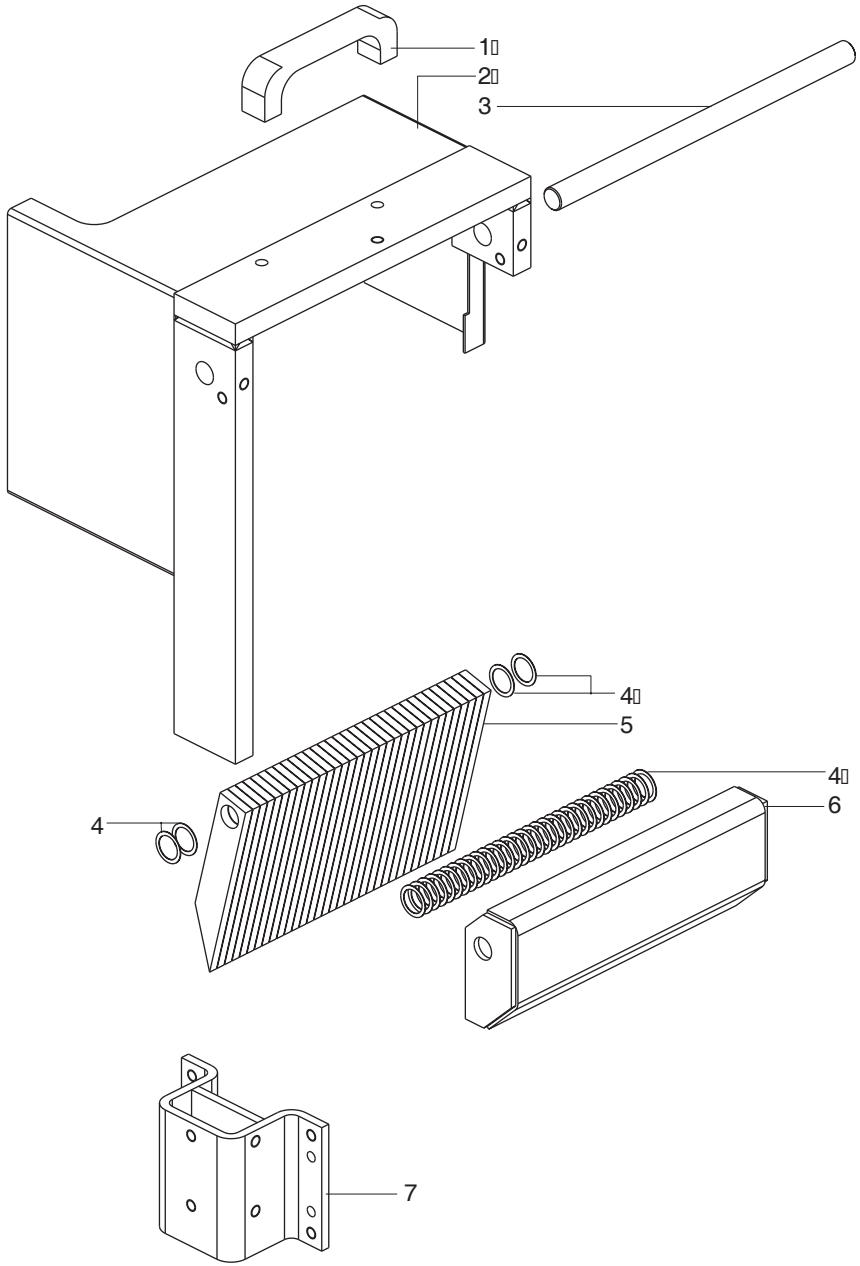


8

| | | | |
|---|---|---|---|
| scm | SUPERSET XL | DISP. DI SICUREZZA C/MARTELLETTI ANTIRIT - (01.01.1901 -> - p.20,06,2007)<br>ANTI-KICKBACK FINGERS UNIT - GROUPE DOIGTS ANTIRECUIL<br>RUECKSCHLAGFINGER - DISP. DE SEGURIDAD C/MARTINETES ANTIREGR | 227-0733-0 |

| scm | SUPERSET XL | MOTOVARIATORE - (p.20,06,2007)<br>MOTOR CONVERTER - MOTOVARIATEUR<br>VERSTELLGETRIEBEMOTOR - MOTOVARIADOR | 227-0735-0 |
|---|---|---|---|

| N | P | C | CODICE | Q.TY | DENOMINAZIONE | DESCRIPTION | DESIGNATION | BEZEICHNUNG | DENOMINACION |
|---|---|---|---|---|---|---|---|---|---|
| | 01.01.1901 -> 01.01.3000 | | | | Note: 2822740150A | | | | |
| | 1 | | 0001339297B | 1.00 | MOTORE TRIF. | 3-PH. MOTOR | 3-PH. MOTEUR | 3-PH. MOTOR | MOT.TRIFAS. |
| | 1 | | 0001339696H | 1.00 | MOTORE TRIF. FRENO C.C. | 3-PH. MOTOR C.C. BRAKE | 3-PH. MOTEUR FREIN C.C. | 3-PH. MOTOR C.C. BREMSE | MOT.TRIFAS.FR.C.C. |
| | 1 | | 0001340688D | 1.00 | MOTORE TRIF. FRENO C.C. | 3-PH. MOTOR C.C. BRAKE | 3-PH. MOTEUR FREIN C.C. | 3-PH. MOTOR C.C. BREMSE | MOT.TRIFAS.FR.C.C. |
| | 1 | | 0001340689F | 1.00 | MOTORE TRIF. FRENO C.C. | 3-PH. MOTOR C.C. BRAKE | 3-PH. MOTEUR FREIN C.C. | 3-PH. MOTOR C.C. BREMSE | MOT.TRIFAS.FR.C.C. |
| | 1 | | 0001340691L | 1.00 | MOTORE TRIF. | 3-PH. MOTOR | 3-PH. MOTEUR | 3-PH. MOTOR | MOT.TRIFAS. |
| | 1 | | 0001340692B | 1.00 | MOTORE TRIF. | 3-PH. MOTOR | 3-PH. MOTEUR | 3-PH. MOTOR | MOT.TRIFAS. |
| | 1 | | 0001340693D | 1.00 | MOTORE TRIF. | 3-PH. MOTOR | 3-PH. MOTEUR | 3-PH. MOTOR | MOT.TRIFAS. |
| | 1 | | 0001340694F | 1.00 | MOTORE TRIF. | 3-PH. MOTOR | 3-PH. MOTEUR | 3-PH. MOTOR | MOT.TRIFAS. |
| | 1 | | 0001340695H | 1.00 | MOTORE TRIF. FRENO C.C. | 3-PH. MOTOR C.C. BRAKE | 3-PH. MOTEUR FREIN C.C. | 3-PH. MOTOR C.C. BREMSE | MOT.TRIFAS.FR.C.C. |
| | 1 | | 0001340737H | 1.00 | MOTORE TRIF. | 3-PH. MOTOR | 3-PH. MOTEUR | 3-PH. MOTOR | MOT.TRIFAS. |
| | 2 | | 0322740100B | 1.00 | SUPPORTO | SUPPORT | SUPPORT | STUETZE | SOPORTE |
| | 3 | | 0000645054E | 3.00 | LINGUETTA | FEATHER KEY | LANGUETTE | FEDERKEIL | LINGUETA |
| | 4 | | 0000644278L | 1.00 | ANELLO SEEGER | CIRCLIP | CIRCLIP | SEEGERRING | SEEGER |
| | 5 | | 0000606111H | 4.00 | CUSCINETTO | BEARING | ROULEMENT | LAGER | COJINETE |
| | 6 | | 0322740102F | 1.00 | ALBERO | SHAFT | ARBRE | WELLE | EJE |
| | 7 | | 0000644062A | 4.00 | ANELLO SEEGER | CIRCLIP | CIRCLIP | SEEGERRING | SEEGER |
| | 8 | | 0722740120C | 1.00 | PULEGGIA DENTATA | PULLEY | POULIE | RIEMENSCHEIBE | POLEA |
| | 9 | | 0000603506D | 1.00 | CINGHIA TRAP | V-BELT | COURROIE TRAPEZOIDALE | KEILRIEMEN | CORREA TRAPEZ. |
| | 10 | | 0000636538B | 1.00 | PULEGGIA ESP | EXPANDING PULLEY | POULIE EXPANSIBLE | SPREIZSCHEIBE | POLEA EXPANS. |
| | 11 | | 0322740103H | 1.00 | BOCCOLA | BUSHING | DOUILLE | BUCHSE | CASQUILLO |
| | 12 | | 0000636104A | 1.00 | PULEGGIA | PULLEY | POULIE | RIEMENSCHEIBE | POLEA |
| | 13 | | 0322740106E | 1.00 | BOCCOLA | BUSHING | DOUILLE | BUCHSE | CASQUILLO |
| | 14 | | 0322740101D | 1.00 | ALBERO | SHAFT | ARBRE | WELLE | EJE |
| | 15 | | 0000604382A | 1.00 | CINGHIA DENTATA | TOOTHED BELT | COURROIE DENTEE | ZAHNRIEMEN | CORREA DENT. |
| | 17 | | 0000645159H | 1.00 | LINGUETTA | FEATHER KEY | LANGUETTE | FEDERKEIL | LINGUETA |
| | 18 | | 0722740115C | 3.00 | DADO | NUT | ECROU | MUTTER | TUERCA |
| | 19 | | 0322740110C | 1.00 | CAMPANA | CAP | CLOCHE | KAPPE | CAMPANA |
| | 20 | | 0000613375G | 4.00 | RALLA | WASHER | CRAPAUDINE | SCHEIBE | RANGUA |
| | 21 | | 0000613029D | 1.00 | GABBIA A RULLINI | ROLLER CAGE | CAGE A ROULEAUX | WALZENKAEFIG | COJINETE |
| | 22 | | 0322740111E | 1.00 | VITE | SCREW | VIS | SCHRAUBE | TORNILLO |
| | 23 | | 0327331100G | 2.00 | INGRANAGGIO | GEAR | ENGRENAGE | ZAHNRAD | ENGRANAJE |
| | 24 | | 0722740119B | 1.00 | PULEGGIA DENTATA | PULLEY | POULIE | RIEMENSCHEIBE | POLEA |
| | 25 | | 0322740112G | 1.00 | PERNO | PIN | PIVOT | BOLZEN | PERNO |
| | 26 | | 0316332636C | 1.00 | PASTIGLIA | PAD | PASTILLE | BELAG | PASTILLA |
| | 27 | | 0322740113L | 1.00 | SUPPORTO | SUPPORT | SUPPORT | STUETZE | SOPORTE |
| | 28 | | 0000640677B | 1.00 | TAPPO LISCIO T.PIANA | PLUG WITH FLAT HEAD | BOUCHON A TETE PLATE | STOEPSEL MIT FLACHKOPF | TAPA LIS.CAB.PLANA |
| | 29 | | 0322740114B | 1.00 | COPERCHIO | COVER | COUVERCLE | DECKEL | TAPA |
| | 30 | | 0722740131F | 1.00 | GIUNTO | JOINT | JOINT | KUPPLUNG | JUNTA |

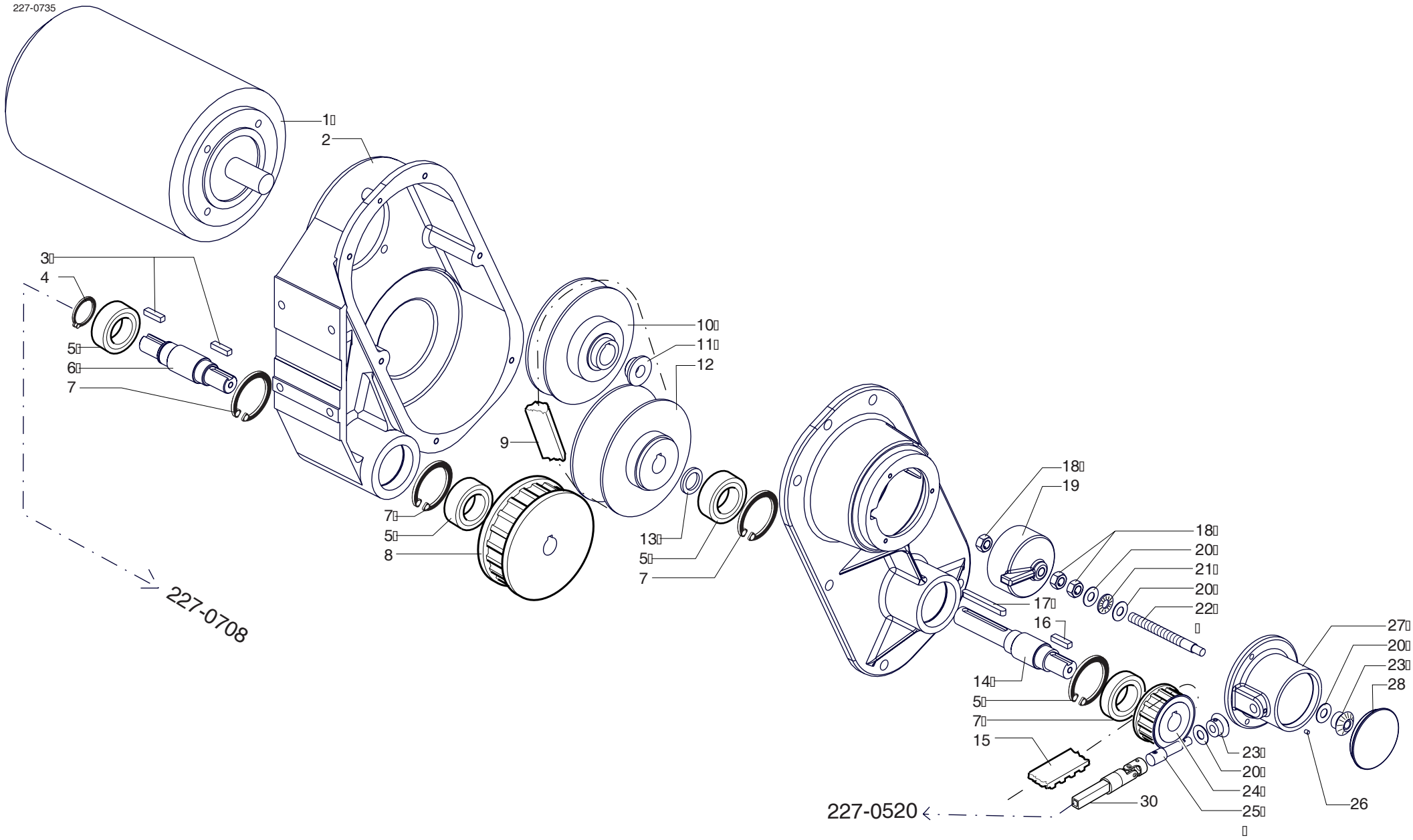


| | | | |
|---|---|---|---|
| scm | **SUPERSET XL** | **MOTOVARIATORE - (01.01.1901 -> - p.20,06,2007)**<br>**MOTOR CONVERTER - MOTOVARIATEUR**<br>**VERSTELLGETRIEBEMOTOR - MOTOVARIADOR** | **227-0735-0** |

| scm | SUPERSET XL | MOTOVARIATORE 6-36M/MIN - (p.20,06,2007)<br>MOTOR CONVERTER 6-36M/MIN - MOTOVARIATEUR 6-36M/MIN<br>VERSTELLGETRIEBEMOTOR 6-36M/MIN - MOTOVARIADOR 6-36M/MIN | 227-0736-0 |
|---|---|---|---|

| N | P | C | CODICE | Q.TY | DENOMINAZIONE | DESCRIPTION | DESIGNATION | BEZEICHNUNG | DENOMINACION |
|---|---|---|---|---|---|---|---|---|---|
| | 01.01.1901 -> 01.01.3000 | | | | Note: 2822740700H | | | | |
| | 1 | | 0001322201H | 1.00 | MOTORE TRIF. | 3-PH. MOTOR | 3-PH. MOTEUR | 3-PH. MOTOR | MOT.TRIFAS. |
| | 2 | | 0000308305L | 1.00 | VITE | SCREW | VIS | SCHRAUBE | TORNILLO |
| | 3 | | 0000301301C | 1.00 | DADO | NUT | ECROU | MUTTER | TUERCA |
| | 4 | | 0322740702L | 1.00 | DISTANZIALE | SPACER | ENTRETOISE | DISTANZSTUECK | DISTANCIADOR |
| | 5 | | 0322740701G | 1.00 | SUPPORTO | SUPPORT | SUPPORT | STUETZE | SOPORTE |
| | 6 | | 0000606111H | 2.00 | CUSCINETTO | BEARING | ROULEMENT | LAGER | COJINETE |
| | 7 | | 0000644062A | 2.00 | ANELLO SEEGER | CIRCLIP | CIRCLIP | SEEGERRING | SEEGER |
| | 8 | | 0000604357H | 1.00 | CINGHIA DENTATA | TOOTHED BELT | COURROIE DENTEE | ZAHNRIEMEN | CORREA DENT. |
| | 9 | | 0000645054E | 2.00 | LINGUETTA | FEATHER KEY | LANGUETTE | FEDERKEIL | LINGUETA |
| | 10 | | 0322740102F | 1.00 | ALBERO | SHAFT | ARBRE | WELLE | EJE |
| | 11 | | 0322740104A | 1.00 | PULEGGIA | PULLEY | POULIE | RIEMENSCHEIBE | POLEA |
| | 12 | | 0000305246A | 1.00 | ROSETTA | WASHER | RONDELLE | SCHEIBE | ARANDELA |
| | 13 | | 0000308394G | 1.00 | VITE | SCREW | VIS | SCHRAUBE | TORNILLO |
| | 14 | | 0722740703A | 1.00 | PULEGGIA DENTATA | TOOTHED PULLEY | POULIE DENTEE | ZAHNRIEMENSCHEIBE | POLEA DENTADA |
| | 15 | | 0722740704C | 1.00 | TASTIERA | KEY BOARD | CLAVIER | TASTATUR | TECLADO |
| | 16 | | 2722740705G | 1.00 | INVERTER | INVERTER | INVERTER | (INVERTER) | INVERTER |
| | 16 | | 2722740706L | 1.00 | INVERTER | INVERTER | INVERTER | (INVERTER) | INVERTER |
| | 16 | | 2722740707B | 1.00 | INVERTER | INVERTER | INVERSEUR | WECHSELRICHTER | INVERTER |
| | 16 | | 2746750101H | 1.00 | INVERTER | INVERTER | INVERTER | (INVERTER) | INVERTER |
| | 16 | | 2746750102A | 1.00 | INVERTER | INVERTER | INVERTER | (INVERTER) | INVERTER |

227-0736

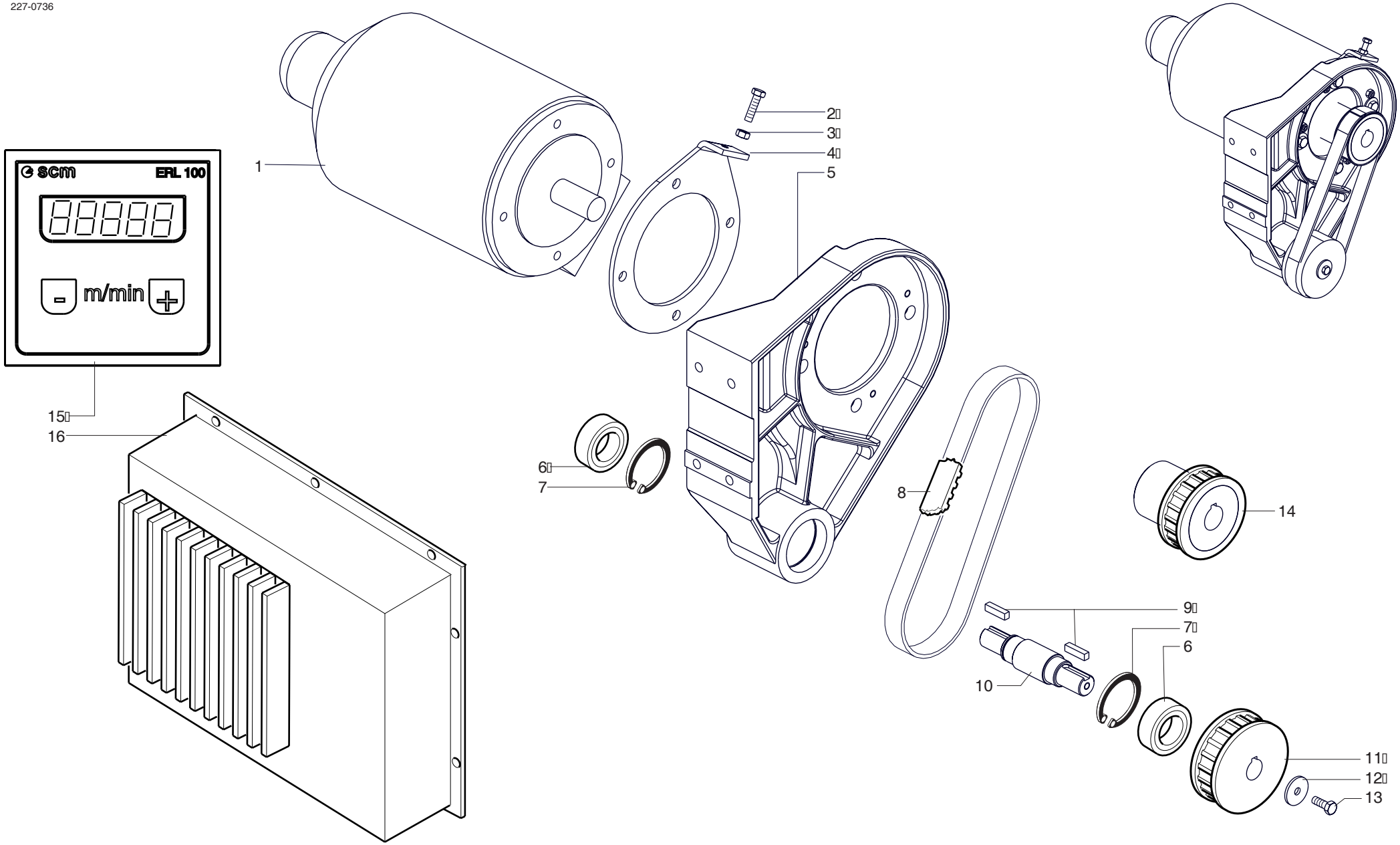


| | | | |
|---|---|---|---|
| scm | SUPERSET XL | MOTOVARIATORE 6-36M/MIN - (01.01.1901 -> - p.20,06,2007)<br>MOTOR CONVERTER 6-36M/MIN - MOTOVARIATEUR 6-36M/MIN<br>VERSTELLGETRIEBEMOTOR 6-36M/MIN - MOTOVARIADOR 6-36M/MIN | 227-0736-0 |

| scm | SUPERSET XL | RINVIO TRAINO UNIVERSALE - (p.20,06,2007)<br>FEED TRANSMISSION (UNIVERSAL SPINDLE) - RENVOI ENTAINEMENT ARBRE UNIVERSAL<br>DURCHZUGVORGELEGE (UNIVERSALWELLE) - REENVIO ARRASTRE UNIVERSAL | 227-0740-0 |
|---|---|---|---|

| N | P | C | CODICE | Q.TY | DENOMINAZIONE | DESCRIPTION | DESIGNATION | BEZEICHNUNG | DENOMINACION |
|---|---|---|---|---|---|---|---|---|---|
| | 01.01.1901 -> 01.01.3000 | | | | Note: 2822740620H | | | | |
| | 1 | | 0722740119B | 4.00 | PULEGGIA DENTATA | PULLEY | POULIE | RIEMENSCHEIBE | POLEA |
| | 2 | | 0000606111H | 4.00 | CUSCINETTO | BEARING | ROULEMENT | LAGER | COJINETE |
| | 3 | | 0000644062A | 4.00 | ANELLO SEEGER | CIRCLIP | CIRCLIP | SEEGERRING | SEEGER |
| | 4 | | 0322740102F | 2.00 | ALBERO | SHAFT | ARBRE | WELLE | EJE |
| | 5 | | 0000604327E | 2.00 | CINGHIA DENTATA | TOOTHED BELT | COURROIE DENTEE | ZAHNRIEMEN | CORREA DENT. |
| | 6 | | 0000645054E | 6.00 | LINGUETTA | FEATHER KEY | LANGUETTE | FEDERKEIL | LINGUETA |
| | 7 | | 0322740035D | 2.00 | SUPPORTO | SUPPORT | SUPPORT | STUETZE | SOPORTE |
| | 8 | | 0000644278L | 2.00 | ANELLO SEEGER | CIRCLIP | CIRCLIP | SEEGERRING | SEEGER |
| | 9 | | 0322740036F | 1.00 | BARRA | BAR | BARRE | STANGE | BARRA |
| | 10 | | 0721940593F | 2.00 | GIUNTO | JOINT | JOINT | KUPPLUNG | JUNTA |

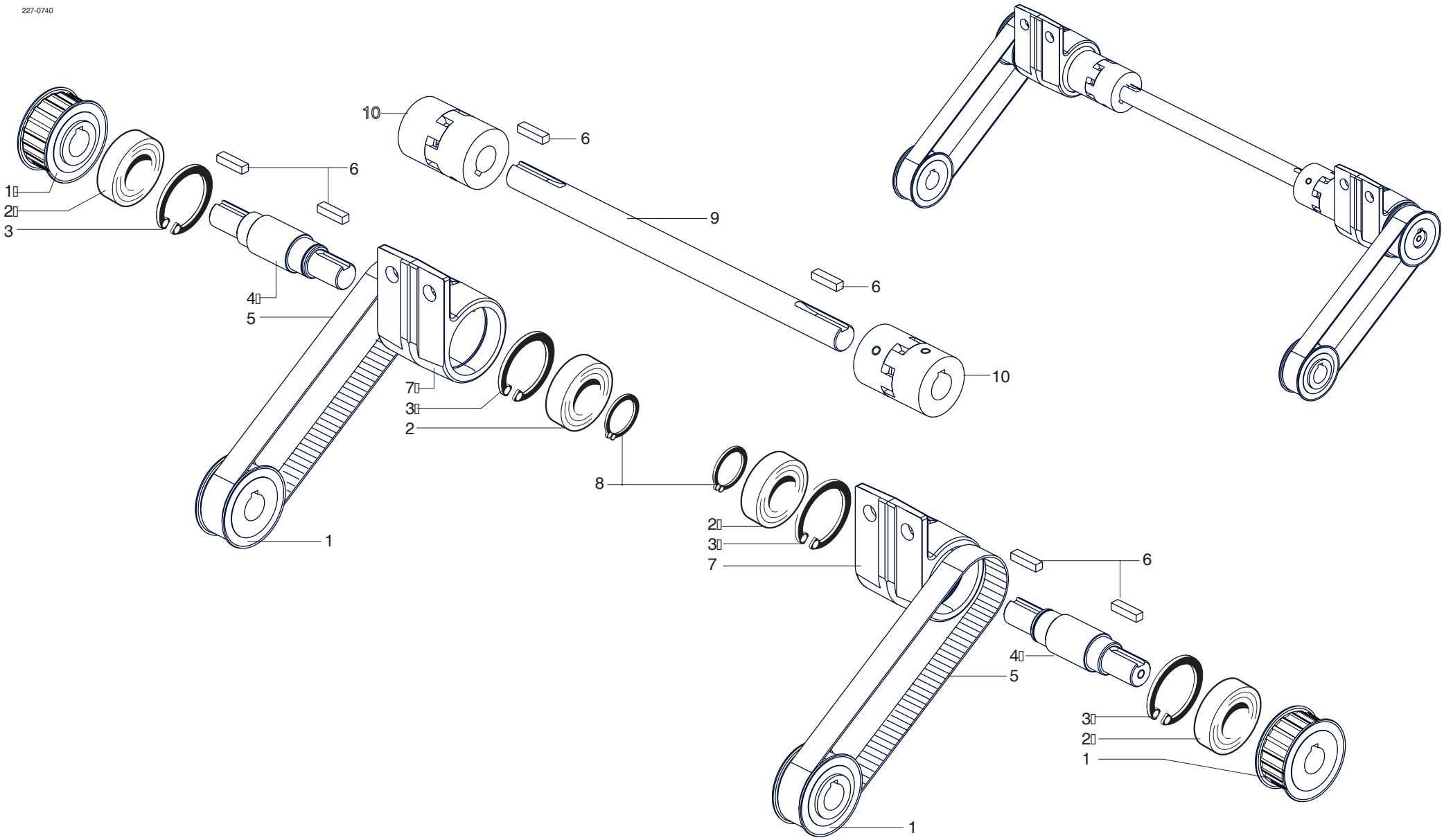


| scm | SUPERSET XL | RINVIO TRAINO UNIVERSALE - (01.01.1901 -> - p.20,06,2007)<br>FEED TRANSMISSION (UNIVERSAL SPINDLE) - RENVOI ENTAINEMENT ARBRE UNIVERSAL<br>DURCHZUGVORGELEGE (UNIVERSALWELLE) - REENVIO ARRASTRE UNIVERSAL | 227-0740-0 |
|---|---|---|---|

| scm | SUPERSET XL | MICRO ANTICOLLISIONE - (p.20,06,2007)<br>MICROSWITCH (ANTICOLLISION) - MICROINTERRUPTER (ANTICOLLISION)<br>MIKROSCHALTER (KOLLISIONSSCHUTZ) - MICRO ANTICHOQUE | 227-0741-0 |
|---|---|---|---|

| N | P | C | CODICE | Q.TY | DENOMINAZIONE | DESCRIPTION | DESIGNATION | BEZEICHNUNG | DENOMINACION |
|---|---|---|---|---|---|---|---|---|---|
| | 01.01.1901 -> 01.01.3000 | | | | Note: 2822740630L | | | | |
| 1 | | | 0322740037H | 1.00 | LAMIERA | PLATE | TOLE | BLECH | CHAPA |
| 2 | | | 0001307924D | 1.00 | FINECORSA | LIMIT SWITCH | FIN DE COURSE | ENDSCHALTER | FIN CARRERA |
| 3 | | | 0322740038A | 1.00 | SUPPORTO | SUPPORT | SUPPORT | STUETZE | SOPORTE |
| 4 | | | 0000309248L | 1.00 | VITE | SCREW | VIS | SCHRAUBE | TORNILLO |

227-0741

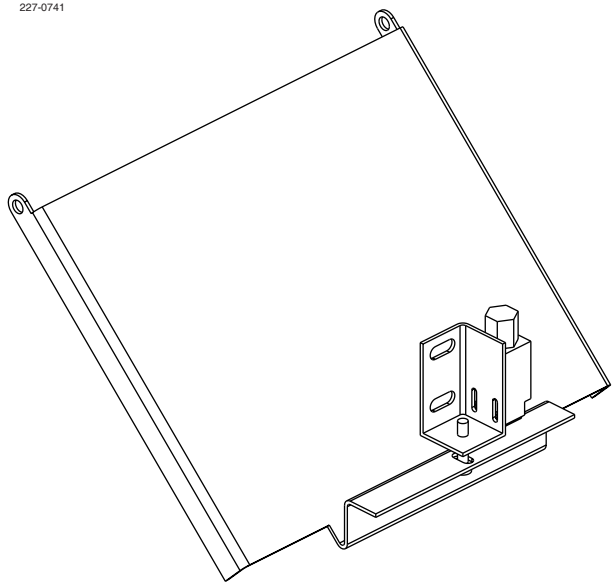

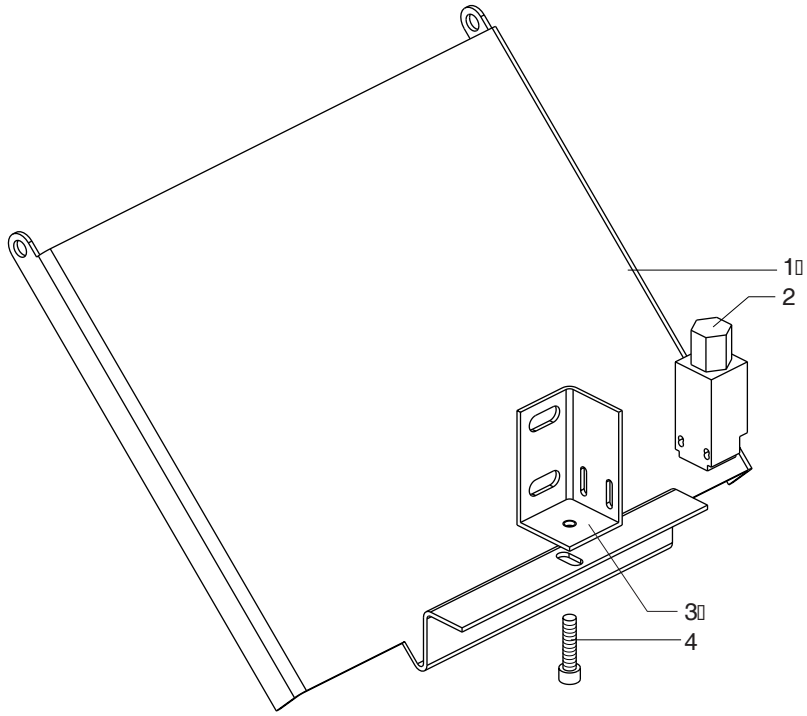


| | | | |
|---|---|---|---|
| scm | SUPERSET XL | MICRO ANTICOLLISIONE - (01.01.1901 -> - p.20,06,2007)<br>MICROSWITCH (ANTICOLLISION) - MICROINTERRUPTER (ANTICOLLISION)<br>MIKROSCHALTER (KOLLISIONSSCHUTZ) - MICRO ANTICHOQUE | 227-0741-0 |

| scm | SUPERSET XL | CONTA METRI - (p.20,06,2007)<br>METER-COUNTER - COMPTEUR METRIQUE<br>METERZAEHLER - CONTA METROS | 227-0750-0 |
|---|---|---|---|

| N | P | C | CODICE | Q.TY | DENOMINAZIONE | DESCRIPTION | DESIGNATION | BEZEICHNUNG | DENOMINACION |
|---|---|---|---|---|---|---|---|---|---|
| | 01.01.1901 -> 01.01.3000 | | | | Note: 2822740520F | | | | |
| 1 | | | 0521940117C | 1.00 | BARRA | BAR | BARRE | STANGE | BARRA |
| 2 | | | 0319480106E | 1.00 | SUPPORTO | SUPPORT | SUPPORT | STUETZE | SOPORTE |
| 3 | | | 0511140535L | 1.00 | SUPPORTO | SUPPORT | SUPPORT | STUETZE | SOPORTE |
| 3 | | | 0522740521L | 1.00 | SUPPORTO | SUPPORT | SUPPORT | STUETZE | SOPORTE |
| 3 | | | 0522740524F | 1.00 | SUPPORTO | SUPPORT | SUPPORT | STUETZE | SOPORTE |
| 4 | | | 0310180112D | 1.00 | RUOTA | WHEEL | ROUE | RAD | RUEDA |
| 4 | | | 0310180115A | 1.00 | RUOTA | WHEEL | ROUE | RAD | RUEDA |
| 5 | | | 0322740523L | 1.00 | PIATTO | PLATE | PLAT | PLATTE | PLATO |
| 6 | | | 0002203008G | 1.00 | CONTAMETRI | METER COUNTER | COMPTEUR METRIQUE | METERZAEHLER | CONTAMETRI |
| 7 | | | 0322740522G | 1.00 | MOLLA | SPRING | RESSORT | FEDER | RESORTE |
| 8 | | | 0310180114H | 1.00 | BUSSOLA | BUSH | DOUILLE | BUCHSE | BUJE |
| 9 | | | 0310180111B | 1.00 | PERNO | PIN | PIVOT | BOLZEN | PERNO |
| 10 | | | 0000644033L | 2.00 | ANELLO SEEGER | CIRCLIP | CIRCLIP | SEEGERRING | SEEGER |
| 11 | | | 0000606040G | 2.00 | CUSCINETTO | BEARING | ROULEMENT | LAGER | COJINETE |
| 12 | | | 0310180110L | 1.00 | BIELLA | CONNECTING ROD | BIELLE | PLEUELSTANGE | BIELA |
| 13 | | | 0000644263G | 1.00 | ANELLO SEEGER | CIRCLIP | CIRCLIP | SEEGERRING | SEEGER |
| 14 | | | 0000640226E | 1.00 | CAVO | CABLE | CABLE | KABEL | CABLE |
| 15 | | | 0522740526A | 1.00 | SUPPORTO | SUPPORT | SUPPORT | STUETZE | SOPORTE |
| 16 | | | 0322740525D | 1.00 | SUPPORTO | SUPPORT | SUPPORT | STUETZE | SOPORTE |
| 17 | | | 0322740527H | 1.00 | PIATTO | PLATE | PLAT | PLATTE | PLATO |

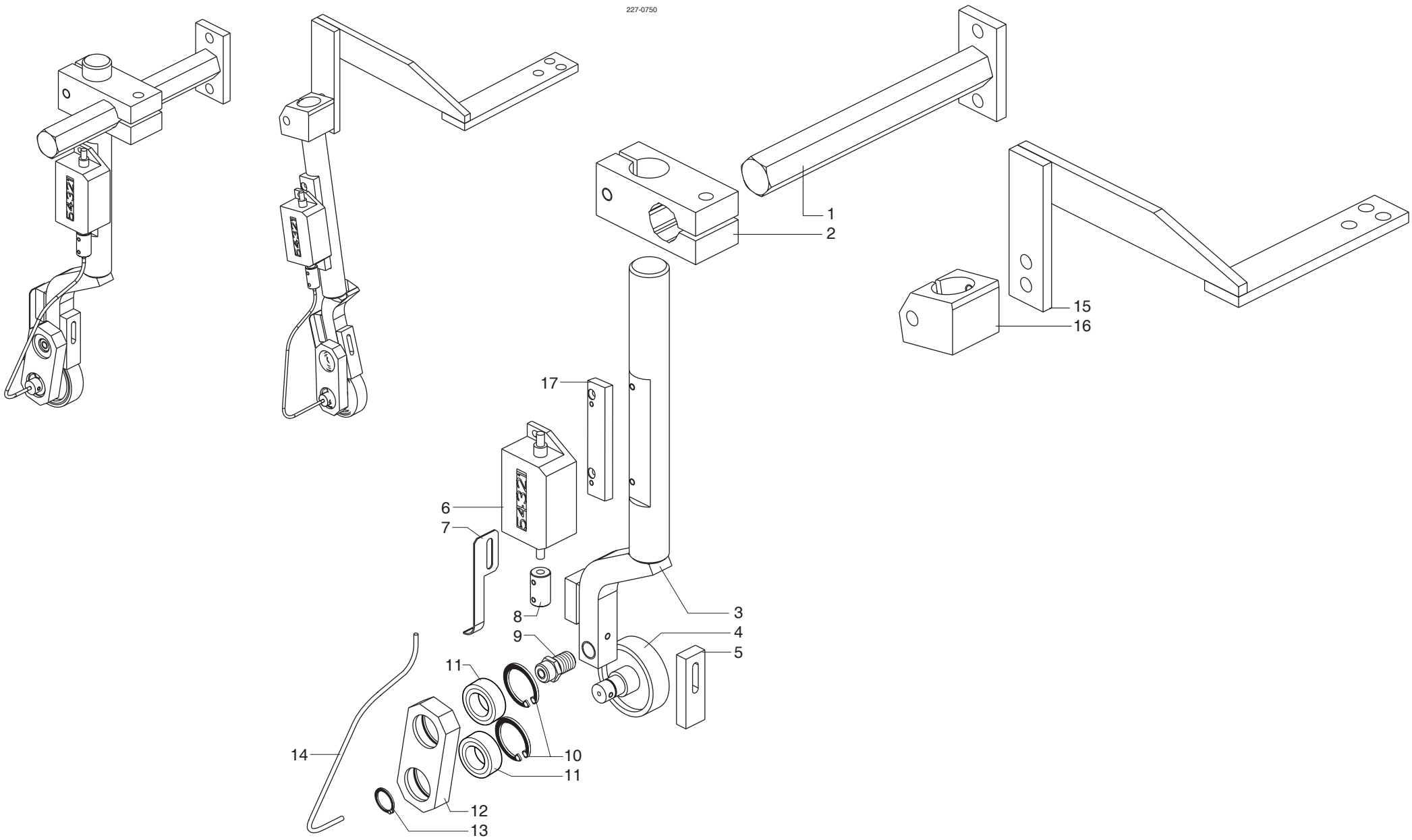


| | | | |
|---|---|---|---|
| scm | **SUPERSET XL** | **CONTA METRI - (01.01.1901 -> - p.20,06,2007)**<br>**METER-COUNTER - COMPTEUR METRIQUE**<br>**METERZAEHLER - CONTA METROS** | **227-0750-0** |

| scm | SUPERSET XL | COLTELLI DIVISORI - (p.20,06,2007)<br>RIVING KNIVES - COUTEAUX DIVISEURS<br>SPALTKEIL - CUCHILLAS DIVISORIAS | 227-0755-0 |
|---|---|---|---|

| N | P | C | CODICE | Q.TY | DENOMINAZIONE | DESCRIPTION | DESIGNATION | BEZEICHNUNG | DENOMINACION |
|---|---|---|---|---|---|---|---|---|---|
| | 01.01.1901 -> 01.01.3000 | | | | Note: 2822781010D | | | | |
| 1 | | | 0319012600E | 1.00 | POMOLO | BALL GRIP | POIGNEE | KUGELGRIFF | POMO |
| 2 | | | 0319431222A | 1.00 | BARRA FILETTATA | THREADED BAR | BARRE | STANGE | BARRA |
| 2 | | | 0321960417L | 1.00 | BARRA FILETTATA | THREADED BAR | BARRE | STANGE | BARRA |
| 3 | | | 0319460262A | 1.00 | PIASTRA | PLATE | PLAQUE | PLATTE | PLANCHA |
| 4 | | | 0319460271L | 1.00 | SUPPORTO | SUPPORT | SUPPORT | STUETZE | SOPORTE |
| 5 | | | 0000301430F | 2.00 | DADO | NUT | ECROU | MUTTER | TUERCA |
| 6 | | | 0000305361D | 2.00 | ROSETTA | WASHER | RONDELLE | SCHEIBE | ARANDELA |
| 7 | | | 0000309243H | 1.00 | VITE | SCREW | VIS | SCHRAUBE | TORNILLO |
| 7 | | | 0322781018H | 1.00 | PERNO | PIN | PIVOT | BOLZEN | PERNO |
| 8 | | | 0000305243D | 1.00 | ROSETTA | WASHER | RONDELLE | SCHEIBE | ARANDELA |
| 9 | | | 0000301181G | 2.00 | DADO | NUT | ECROU | MUTTER | TUERCA |
| 10 | | | 0000304183E | 2.00 | GRANO | DOWEL | VIS SIX PANS CREUX | DUEBEL | PASADOR |
| 11 | | | 0319461804C | 7.00 | TASSELLO | BLOCK | TASSEAU | DUEBEL | TACO |
| 12 | | | 0319461703H | 5.00 | PORTACOLTELLO | KNIFE HOLDER | PORTE-COUTEAU | MESSERHALTER | PORTA CUCHILLO |
| 12 | | | 0322781015B | 5.00 | PORTACOLTELLO | KNIFE HOLDER | PORTE-COUTEAU | MESSERHALTER | PORTA CUCHILLO |
| 13 | | | 0322781013G | 3.00 | BATTUTA | STOP | BUTEE | ANSCHLAG | TOPE |
| 14 | | | 0321960613E | 2.00 | COLTELLO DIVISORE | RIVING KNIFE | COUTEAU DIVISEUR | SPALTKEIL | CUCHILLA DIVISORIA |
| 14 | | | 0322781017F | 2.00 | COLTELLO DIVISORE | RIVING KNIFE | COUTEAU DIVISEUR | SPALTKEIL | CUCHILLA DIVISORIA |
| 14 | | | 0322781032G | 2.00 | COLTELLO DIVISORE SP=5,4 | RIVING KNIFE | COUTEAU DIVISEUR | SPALTKEIL | CUCHILLA DIVISORIA |
| 15 | | | 0522781012L | 1.00 | SUPPORTO | SUPPORT | SUPPORT | STUETZE | SOPORTE |
| 16 | | | 0522781011G | 1.00 | SUPPORTO | SUPPORT | SUPPORT | STUETZE | SOPORTE |
| 17 | | | 0321960612C | 3.00 | COLTELLO DIVISORE | RIVING KNIFE | COUTEAU DIVISEUR | SPALTKEIL | CUCHILLA DIVISORIA |
| 17 | | | 0322781016D | 3.00 | COLTELLO DIVISORE | RIVING KNIFE | COUTEAU DIVISEUR | SPALTKEIL | CUCHILLA DIVISORIA |
| 17 | | | 0322781031E | 2.00 | COLTELLO DIVISORE SP=4 | RIVING KNIFE | COUTEAU DIVISEUR | SPALTKEIL | CUCHILLA DIVISORIA |
| 18 | | | 0319460256H | 1.00 | PIASTRA | PLATE | PLAQUE | PLATTE | PLANCHA |
| 18 | | | 0322781014L | 1.00 | PIASTRA | PLATE | PLAQUE | PLATTE | PLANCHA |
| 19 | | | 0319461706E | 1.00 | STAFFA | BRACKET | BRIDE | BUEGEL | ABRAZADERA |
| 20 | | | 0000309250C | 3.00 | VITE | SCREW | VIS | SCHRAUBE | TORNILLO |
| 21 | | | 0000309275F | 5.00 | VITE | SCREW | VIS | SCHRAUBE | TORNILLO |

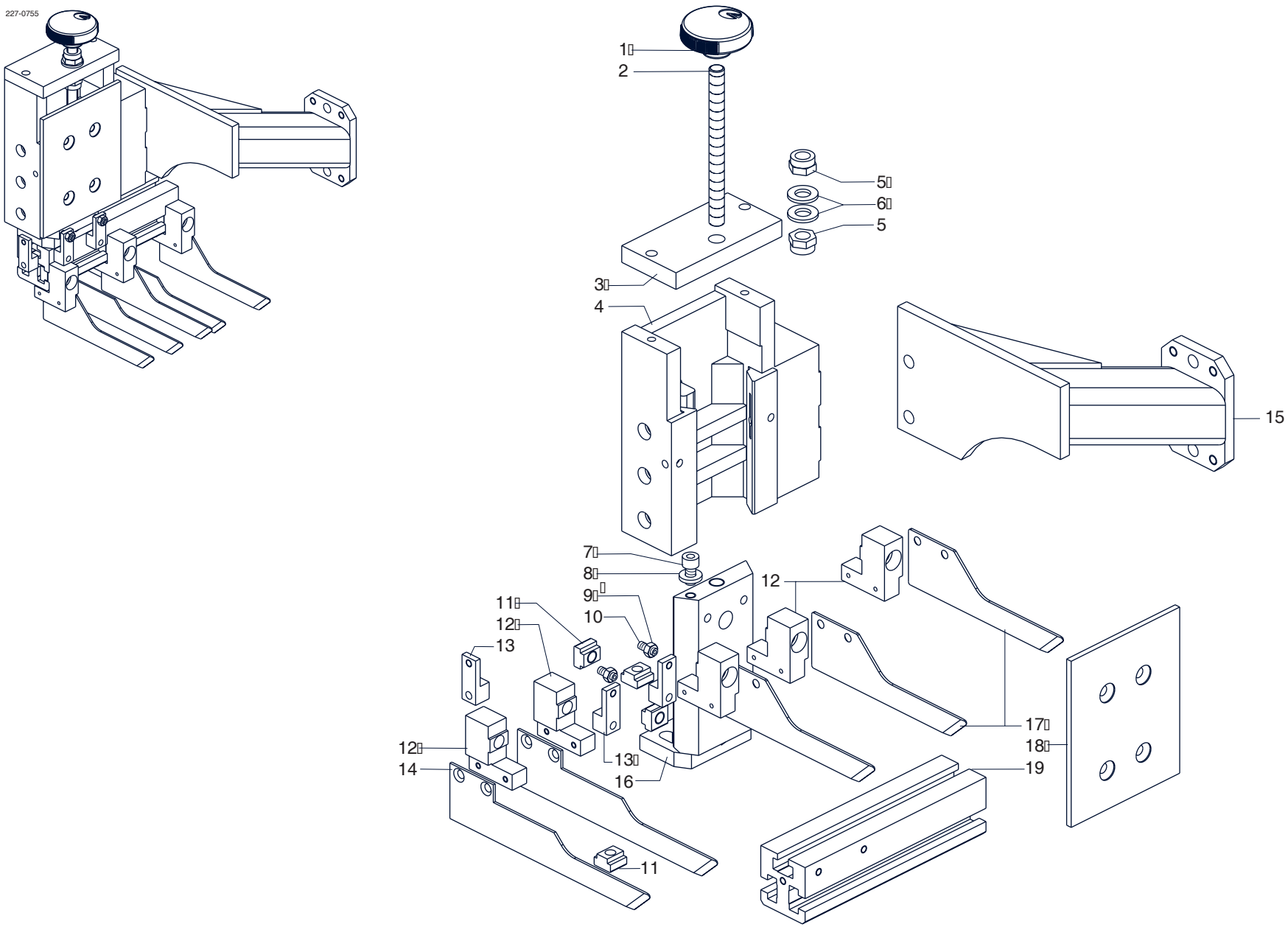


| scm | SUPERSET XL | COLTELLI DIVISORI - (01.01.1901 -> 22.04.2001 - p.20,06,2007)<br>RIVING KNIVES - COUTEAUX DIVISEURS<br>SPALTKEIL - CUCHILLAS DIVISORIAS | 227-0755-0 |
|---|---|---|---|

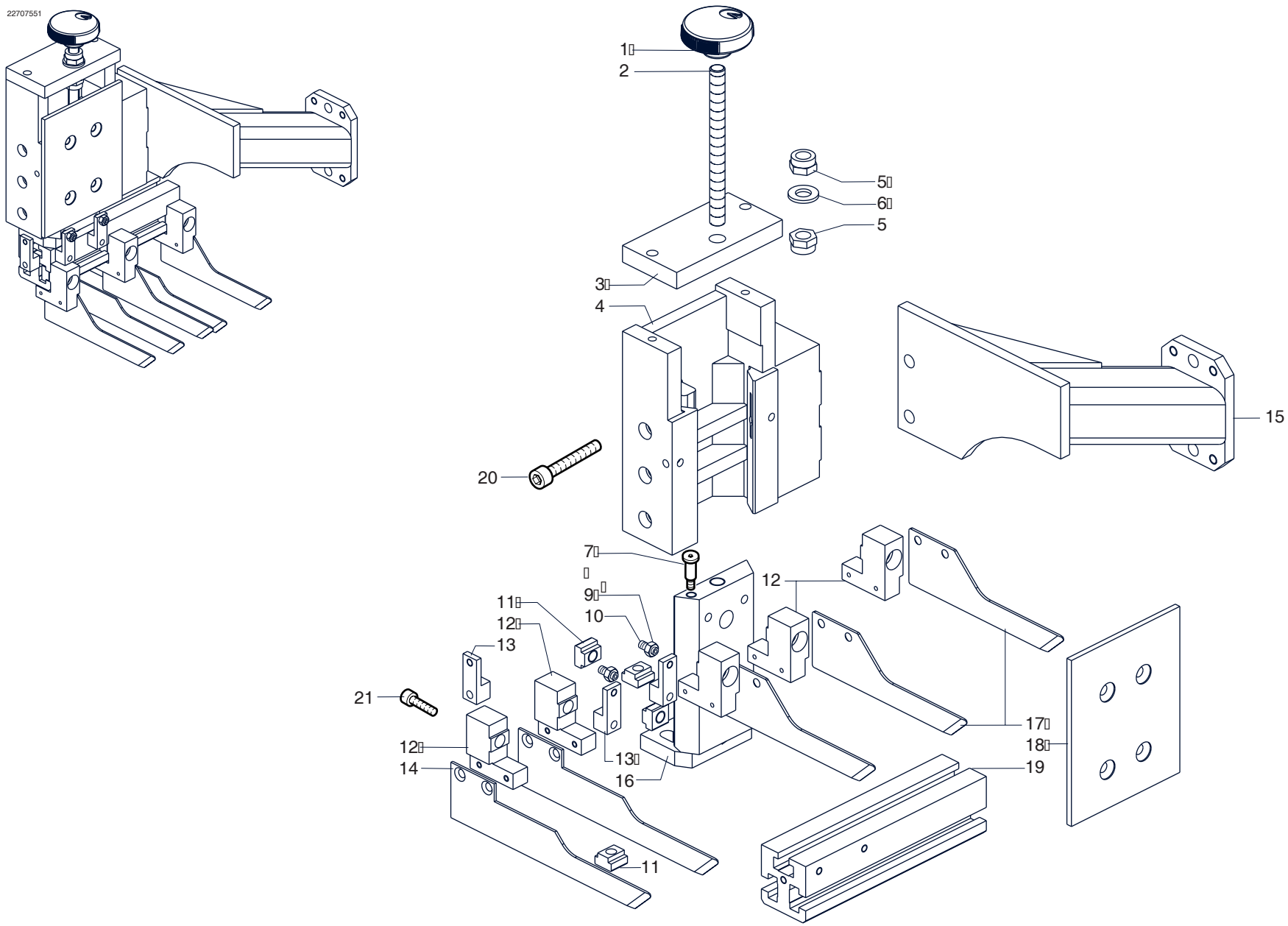


| scm | SUPERSET XL | COLTELLI DIVISORI - (23.04.2001 ->  - p.20,06,2007)<br>RIVING KNIVES - COUTEAUX DIVISEURS<br>SPALTKEIL - CUCHILLAS DIVISORIAS | 227-0755-0 |
|---|---|---|---|

| scm | SUPERSET XL | REGISTRAZIONE MOTORIZZATA RUOTE TRAINO - (p.20,06,2007)<br>POWER ADJUSTMENT FOR FEED WHEELS - REGLAGE MOTORISE ROUES ENTRAINEMENT<br>MOTORBETR. EINSTELLUNG (DURCHZUGRAEDER) - REGULACION MOTORIZADA RUEDAS ARRASTRE | 227-0760-0 |
|---|---|---|---|

| N | P | C | CODICE | Q.TY | DENOMINAZIONE | DESCRIPTION | DESIGNATION | BEZEICHNUNG | DENOMINACION |
|---|---|---|---|---|---|---|---|---|---|
| | 01.01.1901 -> 01.01.3000 | | | | Note: ----- | | | | |
| | 1 | | 0000641080E | 4.00 | TIRANTE | TIE-ROD | TIRANT | ZUGBOLZEN | TIRANTE |
| | 2 | | 0322740804F | 4.00 | FORCELLA | FORK | FOURCHE | GABEL | HORQUILLA |
| | 3 | | 0322740816B | 4.00 | BARRA FILETTATA | THREADED BAR | BARRE | STANGE | BARRA |
| | 4 | | 0001307905D | 1.00 | FINECORSA | LIMIT SWITCH | FIN DE COURSE | ENDSCHALTER | FIN CARRERA |
| | 5 | | 0322740809G | 1.00 | STAFFA | BRACKET | BRIDE | BUEGEL | ABRAZADERA |
| | 6 | | 0322740805H | 2.00 | BARRA | BAR | BARRE | STANGE | BARRA |
| | 7 | | 0322740813E | 1.00 | INDICE | POINTER | INDICATEUR | ZEIGER | INDICE |
| | 8 | | 0522740802F | 1.00 | TRAVERSA | CROSS MEMBER | TRAVERSE | QUERBALKEN | PUENTE |
| | 9 | | 0316333847B | 2.00 | MADREVITE TPN.20X5 | NUT SCREW | VIS-MERE | MUTTERGEWINDE | TUERCA |
| | 10 | | 0310450901E | 1.00 | MOLLA | SPRING | RESSORT | FEDER | RESORTE |
| | 11 | | 0322740811A | 4.00 | TUBO | HOSE | TUYAU | SCHLAUCH | TUBO |
| | 12 | | 0322740810H | 1.00 | ATTACCO | CONNECTING ROD | BARRE FIXATION | STAB | CONEXION |
| | 13 | | 0001347322E | 2.00 | CAMMA TCX-00-24 | CAM | CAME | NOCKEN | EXCENTRICO |
| | 14 | | 0001340343B | 2.00 | CAMMA AZION. | CAM | CAME | TREIBNOCKEN | EXCENTRICO ACC. |
| | 15 | | 0319432915C | 1.00 | MADREVITE | NUT SCREW | VIS-MERE | MUTTERGEWINDE | TUERCA |
| | 16 | | 0322740808E | 2.00 | VITE | SCREW | VIS | SCHRAUBE | TORNILLO |
| | 17 | | 0000645184A | 2.00 | LINGUETTA | FEATHER KEY | LANGUETTE | FEDERKEIL | LINGUETA |
| | 18 | | 0000644036F | 2.00 | ANELLO SEEGER | CIRCLIP | CIRCLIP | SEEGERRING | SEEGER |
| | 19 | | 0000613045G | 8.00 | RALLA | WASHER | CRAPAUDINE | SCHEIBE | RANGUA |
| | 20 | | 0000613041H | 4.00 | GABBIA A RULLINI | ROLLER CAGE | CAGE A ROULEAUX | WALZENKAEFIG | COJINETE |
| | 21 | | 0316330020C | 2.00 | RONDELLA | WASHER | RONDELLE | SCHEIBE | ARANDELA |
| | 22 | | 0522740822H | 1.00 | STAFFA | BRACKET | BRIDE | BUEGEL | ABRAZADERA |
| | 23 | | 0000601446D | 4.00 | BOCCOLA AUTOL. | SELF-LUBRICATING BUSH | DOUILLE AUTOLUBRIFIANTE | SELBSTSCHMIER. BUCHSE | ANILL.AUTOLUB. |
| | 24 | | 0319430407C | 2.00 | CORONA DENTATA | SPROCKET | PIGNON | RITZEL | RUEDA DENTADA |
| | 25 | | 0000601113G | 4.00 | BOCCOLA | BUSHING | DOUILLE | BUCHSE | CASQUILLO |
| | 26 | | 0322740815L | 1.00 | SUPPORTO | SUPPORT | SUPPORT | STUETZE | SOPORTE |
| | 27 | | 0000639401D | 1.00 | RIDUTTORE | GEAR UNIT | REDUCTEUR | GETRIEBE | REDUCTOR |
| | 28 | | 0000645308E | 1.00 | LINGUETTA | FEATHER KEY | LANGUETTE | FEDERKEIL | LINGUETA |
| | 29 | | 0000645043B | 1.00 | LINGUETTA | FEATHER KEY | LANGUETTE | FEDERKEIL | LINGUETA |
| | 30 | | 0000602214C | 1.00 | CATENA | CHAIN | CHAINE | KETTE | CADENA |
| | 31 | | 0322740806A | 1.00 | ALBERO | SHAFT | ARBRE | WELLE | EJE |
| | 32 | | 0722740030B | 1.00 | PIGNONE | SPROCKET | PIGNON | RITZEL | PIÑON |
| | 33 | | 0001337883C | 1.00 | MOTORE TRIF. | 3.PH. MOTOR | 3 PH. MOTEUR | 3-DREIPHASENMOTOR | MOT. TRIFAS |
| | 34 | | 0322740807C | 2.00 | SUPPORTO | SUPPORT | SUPPORT | STUETZE | SOPORTE |
| | 35 | | 0322740824H | 1.00 | TARGHETTA IN MM | RATING PLATE | PLAQUETTE | SCHILD | TARJETA |
| | 35 | | 0322775026G | 1.00 | TARGHETTA IN INCH | RATING PLATE | PLAQUETTE | SCHILD | TARJETA |
| | 36 | | 0339049000H | 4.00 | PERNO | PIN | PIVOT | BOLZEN | PERNO |
| | 37 | | 0000644256C | 8.00 | ANELLO SEEGER | CIRCLIP | CIRCLIP | SEEGERRING | SEEGER |
| | 38 | | 0000616034G | 2.00 | INGRASSATORE (NIPPLO) | GREASE NIPPLE | NIPPLE | SCHMIERNIPPEL | NIPLE ENGRASADOR |

| N | P | C | CODICE | Q.TY | DENOMINAZIONE | DESCRIPTION | DESIGNATION | BEZEICHNUNG | DENOMINACION |
|---|---|---|---|---|---|---|---|---|---|
| | 39 | | 0322740817D | 1.00 | ATTACCO | CONNECTING ROD | BARRE FIXATION | STAB | CONEXION |

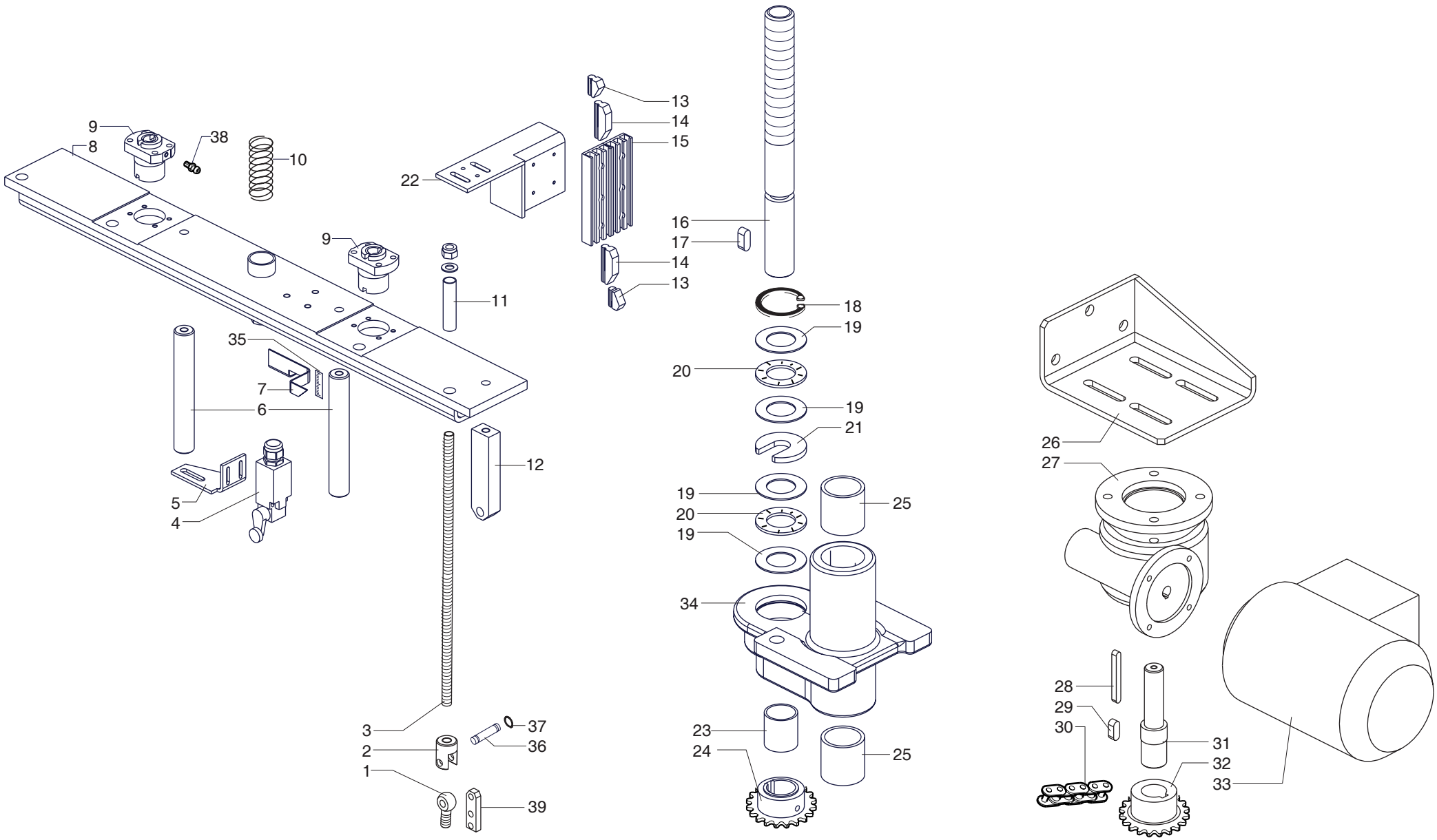


| | | | |
|---|---|---|---|
| scm | SUPERSET XL | REGISTRAZIONE MOTORIZZATA RUOTE TRAINO - (01.01.1901 -> - p.20,06,2007)<br>POWER ADJUSTMENT FOR FEED WHEELS - REGLAGE MOTORISE ROUES ENTRAINEMENT<br>MOTORBETR. EINSTELLUNG (DURCHZUGRAEDER) - REGULACION MOTORIZADA RUEDAS ARRASTRE | 227-0760-0 |

| scm | SUPERSET XL | REGISTRAZIONE MOTORIZZATA RUOTE TRAINO - (p.20,06,2007)<br>POWER ADJUSTMENT FOR FEED WHEELS - REGLAGE MOTORISE ROUES ENTRAINEMENT<br>MOTORBETR. EINSTELLUNG (DURCHZUGRAEDER) - REGULACION MOTORIZADA RUEDAS ARRASTRE | 227-0760-K |
|---|---|---|---|

| N | P | C | CODICE | Q.TY | DENOMINAZIONE | DESCRIPTION | DESIGNATION | BEZEICHNUNG | DENOMINACION |
|---|---|---|---|---|---|---|---|---|---|
| | 01.01.1901 -> 01.01.3000 | | | | Note: ----- | | | | |
| 1 | | | 0000641080E | 4.00 | TIRANTE | TIE-ROD | TIRANT | ZUGBOLZEN | TIRANTE |
| 2 | | | 0322740804F | 4.00 | FORCELLA | FORK | FOURCHE | GABEL | HORQUILLA |
| 3 | | | 0322740816B | 4.00 | BARRA FILETTATA | THREADED BAR | BARRE | STANGE | BARRA |
| 4 | | | 0001307353B | 1.00 | FINECORSA | LIMIT SWITCH | FIN DE COURSE | ENDSCHALTER | FIN CARRERA |
| 5 | | | 0322740809G | 1.00 | STAFFA | BRACKET | BRIDE | BUEGEL | ABRAZADERA |
| 6 | | | 0322740805H | 2.00 | BARRA | BAR | BARRE | STANGE | BARRA |
| 7 | | | 0322740813E | 1.00 | INDICE | POINTER | INDICATEUR | ZEIGER | INDICE |
| 8 | | | 0522740802F | 1.00 | TRAVERSA | CROSS MEMBER | TRAVERSE | QUERBALKEN | PUENTE |
| 9 | | | 0316333847B | 2.00 | MADREVITE TPN.20X5 | NUT SCREW | VIS-MERE | MUTTERGEWINDE | TUERCA |
| 10 | | | 0310450901E | 1.00 | MOLLA | SPRING | RESSORT | FEDER | RESORTE |
| 11 | | | 0322740811A | 4.00 | TUBO | HOSE | TUYAU | SCHLAUCH | TUBO |
| 12 | | | 0322740810H | 1.00 | ATTACCO | CONNECTING ROD | BARRE FIXATION | STAB | CONEXION |
| 13 | | | 0001347322E | 2.00 | CAMMA TCX-00-24 | CAM | CAME | NOCKEN | EXCENTRICO |
| 14 | | | 0001340343B | 2.00 | CAMMA AZION. | CAM | CAME | TREIBNOCKEN | EXCENTRICO ACC. |
| 15 | | | 0319432915C | 1.00 | MADREVITE | NUT SCREW | VIS-MERE | MUTTERGEWINDE | TUERCA |
| 16 | | | 0322740808E | 2.00 | VITE | SCREW | VIS | SCHRAUBE | TORNILLO |
| 17 | | | 0000645184A | 2.00 | LINGUETTA | FEATHER KEY | LANGUETTE | FEDERKEIL | LINGUETA |
| 18 | | | 0000644036F | 2.00 | ANELLO SEEGER | CIRCLIP | CIRCLIP | SEEGERRING | SEEGER |
| 19 | | | 0000613045G | 8.00 | RALLA | WASHER | CRAPAUDINE | SCHEIBE | RANGUA |
| 20 | | | 0000613041H | 4.00 | GABBIA A RULLINI | ROLLER CAGE | CAGE A ROULEAUX | WALZENKAEFIG | COJINETE |
| 21 | | | 0316330020C | 2.00 | RONDELLA | WASHER | RONDELLE | SCHEIBE | ARANDELA |
| 22 | | | 0522740822H | 1.00 | STAFFA | BRACKET | BRIDE | BUEGEL | ABRAZADERA |
| 23 | | | 0000601446D | 4.00 | BOCCOLA AUTOL. | SELF-LUBRICATING BUSH | DOUILLE AUTOLUBRIFIANTE | SELBSTSCHMIER. BUCHSE | ANILL.AUTOLUB. |
| 24 | | | 0319430407C | 2.00 | CORONA DENTATA | SPROCKET | PIGNON | RITZEL | RUEDA DENTADA |
| 25 | | | 0000601113G | 4.00 | BOCCOLA | BUSHING | DOUILLE | BUCHSE | CASQUILLO |
| 26 | | | 0322740815L | 1.00 | SUPPORTO | SUPPORT | SUPPORT | STUETZE | SOPORTE |
| 27 | | | 0000639401D | 1.00 | RIDUTTORE | GEAR UNIT | REDUCTEUR | GETRIEBE | REDUCTOR |
| 28 | | | 0000645308E | 1.00 | LINGUETTA | FEATHER KEY | LANGUETTE | FEDERKEIL | LINGUETA |
| 29 | | | 0000645043B | 1.00 | LINGUETTA | FEATHER KEY | LANGUETTE | FEDERKEIL | LINGUETA |
| 30 | | | 0000602214C | 1.00 | CATENA | CHAIN | CHAINE | KETTE | CADENA |
| 31 | | | 0322740806A | 1.00 | ALBERO | SHAFT | ARBRE | WELLE | EJE |
| 32 | | | 0722740030B | 1.00 | PIGNONE | SPROCKET | PIGNON | RITZEL | PIÑON |
| 33 | | | 0001337883C | 1.00 | MOTORE TRIF. | 3.PH. MOTOR | 3 PH. MOTEUR | 3-DREIPHASENMOTOR | MOT. TRIFAS |
| 34 | | | 0322740807C | 2.00 | SUPPORTO | SUPPORT | SUPPORT | STUETZE | SOPORTE |
| 35 | | | 0322775026G | 1.00 | TARGHETTA IN INCH | RATING PLATE | PLAQUETTE | SCHILD | TARJETA |
| 36 | | | 0339049000H | 4.00 | PERNO | PIN | PIVOT | BOLZEN | PERNO |
| 37 | | | 0000644256C | 8.00 | ANELLO SEEGER | CIRCLIP | CIRCLIP | SEEGERRING | SEEGER |
| 38 | | | 0322740812C | 1.00 | SUPPORTO | SUPPORT | SUPPORT | STUETZE | SOPORTE |
| 39 | | | 0322740819H | 1.00 | CARTER | COVER | CARTER | DECKEL | CARTER |

| N | P | C | CODICE | Q.TY | DENOMINAZIONE | DESCRIPTION | DESIGNATION | BEZEICHNUNG | DENOMINACION |
|---|---|---|---|---|---|---|---|---|---|

2270760K

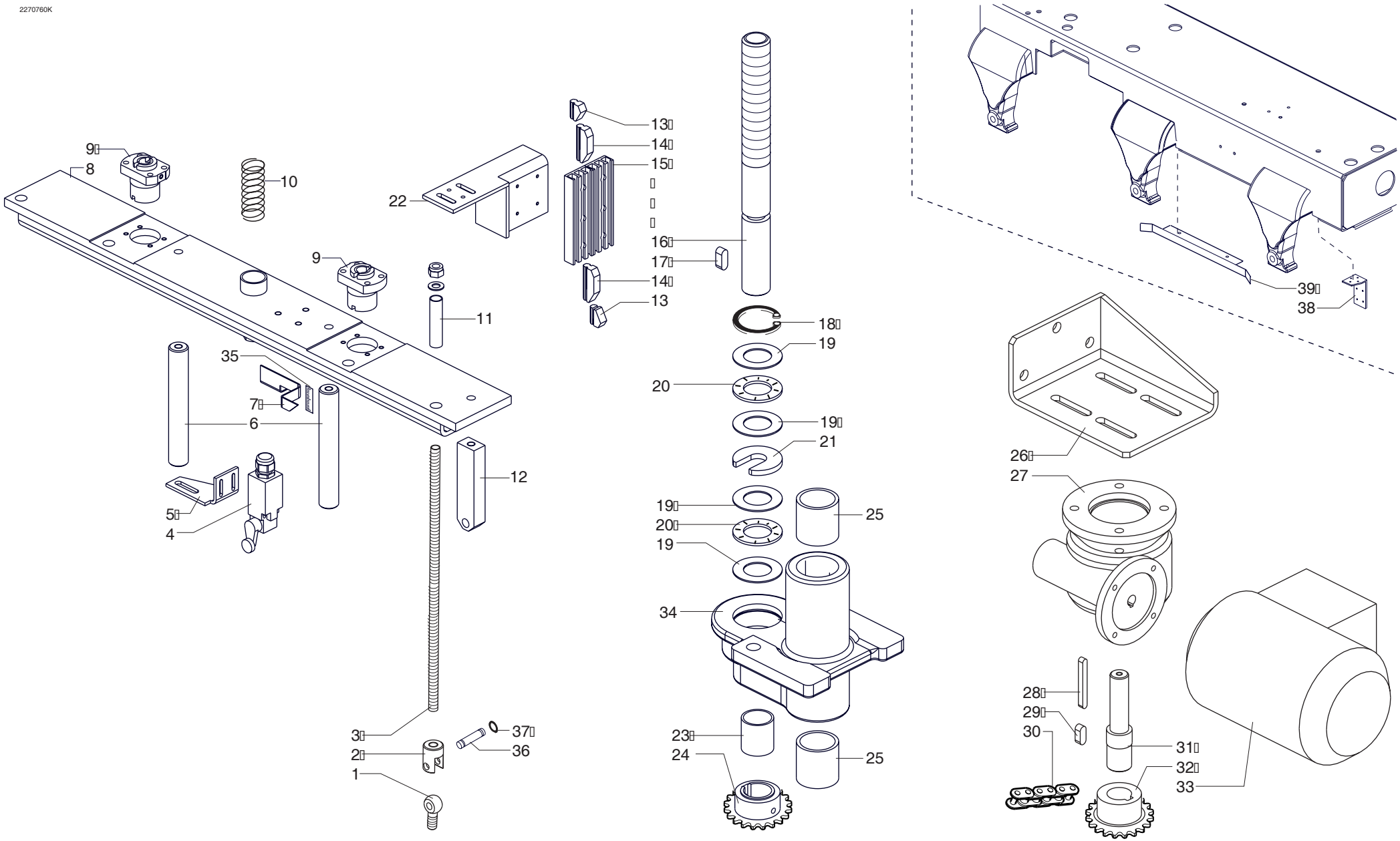


| | | | |
|---|---|---|---|
| scm | SUPERSET XL | REGISTRAZIONE MOTORIZZATA RUOTE TRAINO - (01.01.1901 -> - p.20,06,2007)<br>POWER ADJUSTMENT FOR FEED WHEELS - REGLAGE MOTORISE ROUES ENTRAINEMENT<br>MOTORBETR. EINSTELLUNG (DURCHZUGRAEDER) - REGULACION MOTORIZADA RUEDAS ARRASTRE | 227-0760-K |

scm | SUPERSET XL | REGISTRAZIONE MOTORIZZATA RUOTE TRAINO - (p.20,06,2007)
POWER ADJUSTMENT FOR FEED WHEELS - REGLAGE MOTORISE ROUES ENTRAINEMENT
MOTORBETR. EINSTELLUNG (DURCHZUGRAEDER) - REGULACION MOTORIZADA RUEDAS ARRASTRE | 227-0760-X

| N | P | C | CODICE | Q.TY | DENOMINAZIONE | DESCRIPTION | DESIGNATION | BEZEICHNUNG | DENOMINACION |
|---|---|---|---|---|---|---|---|---|---|
| | 01.01.1901 -> 01.01.3000 | | | | Note: ----- | | | | |
| | 1 | | 0322740027G | 4.00 | TIRANTE | TIE-ROD | TIRANT | ZUGBOLZEN | TIRANTE |
| | 2 | | 0322740804F | 4.00 | FORCELLA | FORK | FOURCHE | GABEL | HORQUILLA |
| | 3 | | 0322740816B | 4.00 | BARRA FILETTATA | THREADED BAR | BARRE | STANGE | BARRA |
| | 4 | | 0001307353B | 1.00 | FINECORSA | LIMIT SWITCH | FIN DE COURSE | ENDSCHALTER | FIN CARRERA |
| | 5 | | 0322740809G | 1.00 | STAFFA | BRACKET | BRIDE | BUEGEL | ABRAZADERA |
| | 6 | | 0322740805H | 2.00 | BARRA | BAR | BARRE | STANGE | BARRA |
| | 7 | | 0322740813E | 1.00 | INDICE | POINTER | INDICATEUR | ZEIGER | INDICE |
| | 8 | | 0522740802F | 1.00 | TRAVERSA | CROSS MEMBER | TRAVERSE | QUERBALKEN | PUENTE |
| | 9 | | 0316333847B | 2.00 | MADREVITE TPN.20X5 | NUT SCREW | VIS-MERE | MUTTERGEWINDE | TUERCA |
| | 10 | | 0310450901E | 1.00 | MOLLA | SPRING | RESSORT | FEDER | RESORTE |
| | 11 | | 0322740811A | 4.00 | TUBO | HOSE | TUYAU | SCHLAUCH | TUBO |
| | 12 | | 0322740810H | 1.00 | ATTACCO | CONNECTING ROD | BARRE FIXATION | STAB | CONEXION |
| | 13 | | 0001347322E | 2.00 | CAMMA TCX-00-24 | CAM | CAME | NOCKEN | EXCENTRICO |
| | 14 | | 0001340343B | 2.00 | CAMMA AZION. | CAM | CAME | TREIBNOCKEN | EXCENTRICO ACC. |
| | 15 | | 0319432915C | 1.00 | MADREVITE | NUT SCREW | VIS-MERE | MUTTERGEWINDE | TUERCA |
| | 16 | | 0322740808E | 2.00 | VITE | SCREW | VIS | SCHRAUBE | TORNILLO |
| | 17 | | 0000645184A | 2.00 | LINGUETTA | FEATHER KEY | LANGUETTE | FEDERKEIL | LINGUETA |
| | 18 | | 0000644036F | 2.00 | ANELLO SEEGER | CIRCLIP | CIRCLIP | SEEGERRING | SEEGER |
| | 19 | | 0000613045G | 8.00 | RALLA | WASHER | CRAPAUDINE | SCHEIBE | RANGUA |
| | 20 | | 0000613041H | 4.00 | GABBIA A RULLINI | ROLLER CAGE | CAGE A ROULEAUX | WALZENKAEFIG | COJINETE |
| | 21 | | 0316330020C | 2.00 | RONDELLA | WASHER | RONDELLE | SCHEIBE | ARANDELA |
| | 22 | | 0522740822H | 1.00 | STAFFA | BRACKET | BRIDE | BUEGEL | ABRAZADERA |
| | 23 | | 0000601446D | 4.00 | BOCCOLA AUTOL. | SELF-LUBRICATING BUSH | DOUILLE AUTOLUBRIFIANTE | SELBSTSCHMIER. BUCHSE | ANILL.AUTOLUB. |
| | 24 | | 0319430407C | 2.00 | CORONA DENTATA | SPROCKET | PIGNON | RITZEL | RUEDA DENTADA |
| | 25 | | 0000601113G | 4.00 | BOCCOLA | BUSHING | DOUILLE | BUCHSE | CASQUILLO |
| | 26 | | 0322740815L | 1.00 | SUPPORTO | SUPPORT | SUPPORT | STUETZE | SOPORTE |
| | 27 | | 0000639401D | 1.00 | RIDUTTORE | GEAR UNIT | REDUCTEUR | GETRIEBE | REDUCTOR |
| | 28 | | 0000645308E | 1.00 | LINGUETTA | FEATHER KEY | LANGUETTE | FEDERKEIL | LINGUETA |
| | 29 | | 0000645043B | 1.00 | LINGUETTA | FEATHER KEY | LANGUETTE | FEDERKEIL | LINGUETA |
| | 30 | | 0000602214C | 1.00 | CATENA | CHAIN | CHAINE | KETTE | CADENA |
| | 31 | | 0322740806A | 1.00 | ALBERO | SHAFT | ARBRE | WELLE | EJE |
| | 32 | | 0722740030B | 1.00 | PIGNONE | SPROCKET | PIGNON | RITZEL | PIÑON |
| | 33 | | 0001337883C | 1.00 | MOTORE TRIF. | 3.PH. MOTOR | 3 PH. MOTEUR | 3-DREIPHASENMOTOR | MOT. TRIFAS |
| | 34 | | 0322740807C | 2.00 | SUPPORTO | SUPPORT | SUPPORT | STUETZE | SOPORTE |

2270760x

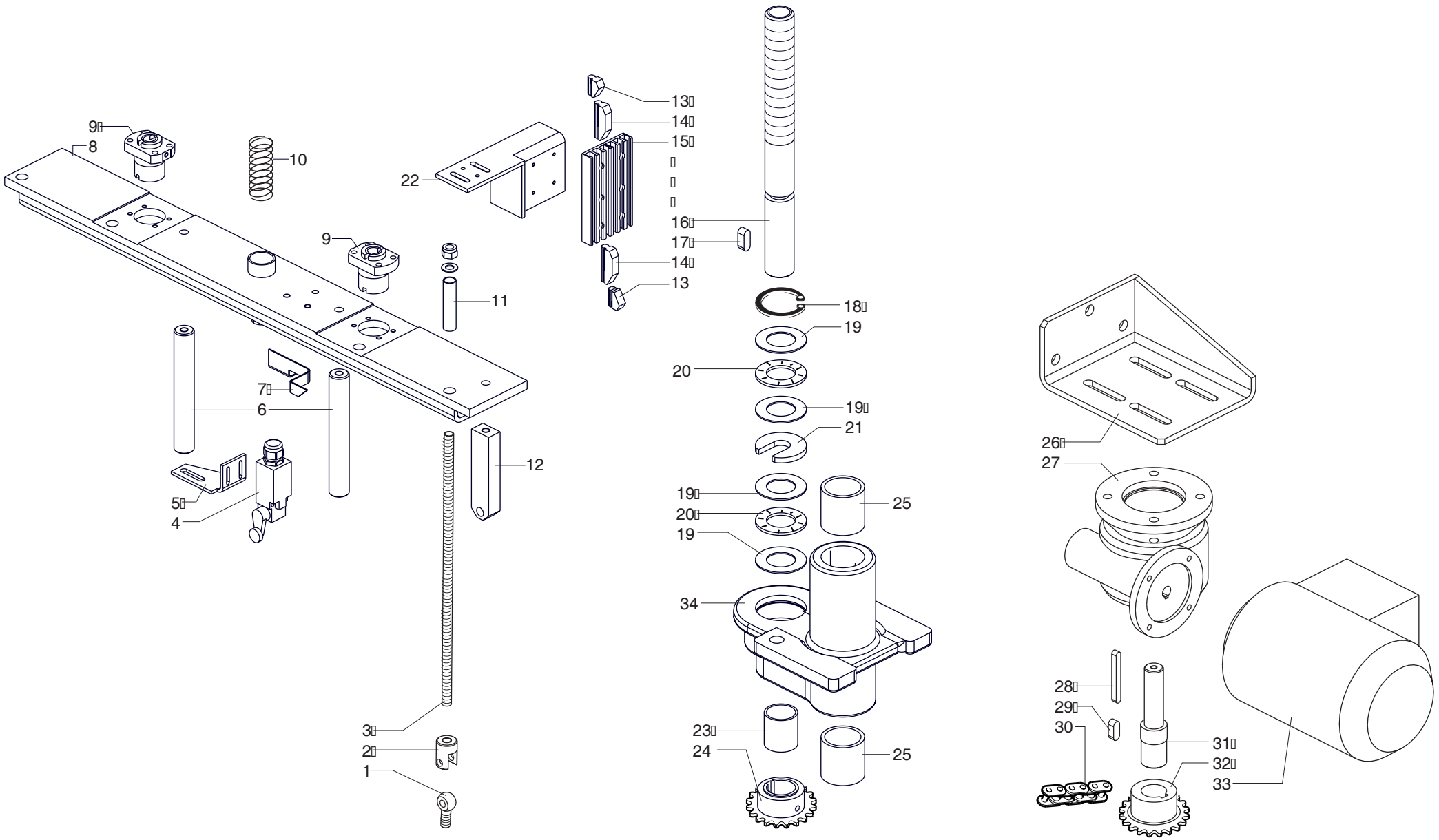


| | | | |
|---|---|---|---|
| scm | SUPERSET XL | REGISTRAZIONE MOTORIZZATA RUOTE TRAINO - (01.01.1901 -> - p.20,06,2007)<br>POWER ADJUSTMENT FOR FEED WHEELS - REGLAGE MOTORISE ROUES ENTRAINEMENT<br>MOTORBETR. EINSTELLUNG (DURCHZUGRAEDER) - REGULACION MOTORIZADA RUEDAS ARRASTRE | 227-0760-X |

scm

**SUPERSET XL**

**REGISTRAZIONE MOTORIZZATA RUOTE TRAINO - (p.20,06,2007)**
**POWER ADJUSTMENT FOR FEED WHEELS - REGLAGE MOTORISE ROUES ENTRAINEMENT**
**MOTORBETR. EINSTELLUNG (DURCHZUGRAEDER) - REGULACION MOTORIZADA RUEDAS ARRASTRE**

**227-0760-Y**

| N | P | C | CODICE | Q.TY | DENOMINAZIONE | DESCRIPTION | DESIGNATION | BEZEICHNUNG | DENOMINACION |
|---|---|---|---|---|---|---|---|---|---|
| | 01.01.1901 -> 01.01.3000 | | | | Note: ----- | | | | |
| | 1 | | 0322740027G | 4.00 | TIRANTE | TIE-ROD | TIRANT | ZUGBOLZEN | TIRANTE |
| | 2 | | 0322740804F | 4.00 | FORCELLA | FORK | FOURCHE | GABEL | HORQUILLA |
| | 3 | | 0322740816B | 4.00 | BARRA FILETTATA | THREADED BAR | BARRE | STANGE | BARRA |
| | 4 | | 0001307353B | 1.00 | FINECORSA | LIMIT SWITCH | FIN DE COURSE | ENDSCHALTER | FIN CARRERA |
| | 5 | | 0322740809G | 1.00 | STAFFA | BRACKET | BRIDE | BUEGEL | ABRAZADERA |
| | 6 | | 0322740805H | 2.00 | BARRA | BAR | BARRE | STANGE | BARRA |
| | 7 | | 0322740813E | 1.00 | INDICE | POINTER | INDICATEUR | ZEIGER | INDICE |
| | 8 | | 0522740802F | 1.00 | TRAVERSA | CROSS MEMBER | TRAVERSE | QUERBALKEN | PUENTE |
| | 9 | | 0316333847B | 2.00 | MADREVITE TPN.20X5 | NUT SCREW | VIS-MERE | MUTTERGEWINDE | TUERCA |
| | 10 | | 0310450901E | 1.00 | MOLLA | SPRING | RESSORT | FEDER | RESORTE |
| | 11 | | 0322740811A | 4.00 | TUBO | HOSE | TUYAU | SCHLAUCH | TUBO |
| | 12 | | 0322740810H | 1.00 | ATTACCO | CONNECTING ROD | BARRE FIXATION | STAB | CONEXION |
| | 13 | | 0001347322E | 2.00 | CAMMA TCX-00-24 | CAM | CAME | NOCKEN | EXCENTRICO |
| | 14 | | 0001340343B | 2.00 | CAMMA AZION. | CAM | CAME | TREIBNOCKEN | EXCENTRICO ACC. |
| | 15 | | 0319432915C | 1.00 | MADREVITE | NUT SCREW | VIS-MERE | MUTTERGEWINDE | TUERCA |
| | 16 | | 0322740808E | 2.00 | VITE | SCREW | VIS | SCHRAUBE | TORNILLO |
| | 17 | | 0000645184A | 2.00 | LINGUETTA | FEATHER KEY | LANGUETTE | FEDERKEIL | LINGUETA |
| | 18 | | 0000644036F | 2.00 | ANELLO SEEGER | CIRCLIP | CIRCLIP | SEEGERRING | SEEGER |
| | 19 | | 0000613045G | 8.00 | RALLA | WASHER | CRAPAUDINE | SCHEIBE | RANGUA |
| | 20 | | 0000613041H | 4.00 | GABBIA A RULLINI | ROLLER CAGE | CAGE A ROULEAUX | WALZENKAEFIG | COJINETE |
| | 21 | | 0316330020C | 2.00 | RONDELLA | WASHER | RONDELLE | SCHEIBE | ARANDELA |
| | 22 | | 0522740822H | 1.00 | STAFFA | BRACKET | BRIDE | BUEGEL | ABRAZADERA |
| | 23 | | 0000601446D | 4.00 | BOCCOLA AUTOL. | SELF-LUBRICATING BUSH | DOUILLE AUTOLUBRIFIANTE | SELBSTSCHMIER. BUCHSE | ANILL.AUTOLUB. |
| | 24 | | 0319430407C | 2.00 | CORONA DENTATA | SPROCKET | PIGNON | RITZEL | RUEDA DENTADA |
| | 25 | | 0000601113G | 4.00 | BOCCOLA | BUSHING | DOUILLE | BUCHSE | CASQUILLO |
| | 26 | | 0322740815L | 1.00 | SUPPORTO | SUPPORT | SUPPORT | STUETZE | SOPORTE |
| | 27 | | 0000639401D | 1.00 | RIDUTTORE | GEAR UNIT | REDUCTEUR | GETRIEBE | REDUCTOR |
| | 28 | | 0000645308E | 1.00 | LINGUETTA | FEATHER KEY | LANGUETTE | FEDERKEIL | LINGUETA |
| | 29 | | 0000645043B | 1.00 | LINGUETTA | FEATHER KEY | LANGUETTE | FEDERKEIL | LINGUETA |
| | 30 | | 0000602214C | 1.00 | CATENA | CHAIN | CHAINE | KETTE | CADENA |
| | 31 | | 0322740806A | 1.00 | ALBERO | SHAFT | ARBRE | WELLE | EJE |
| | 32 | | 0722740030B | 1.00 | PIGNONE | SPROCKET | PIGNON | RITZEL | PIÑON |
| | 33 | | 0001337883C | 1.00 | MOTORE TRIF. | 3.PH. MOTOR | 3 PH. MOTEUR | 3-DREIPHASENMOTOR | MOT. TRIFAS |
| | 34 | | 0322740807C | 2.00 | SUPPORTO | SUPPORT | SUPPORT | STUETZE | SOPORTE |

2270760x

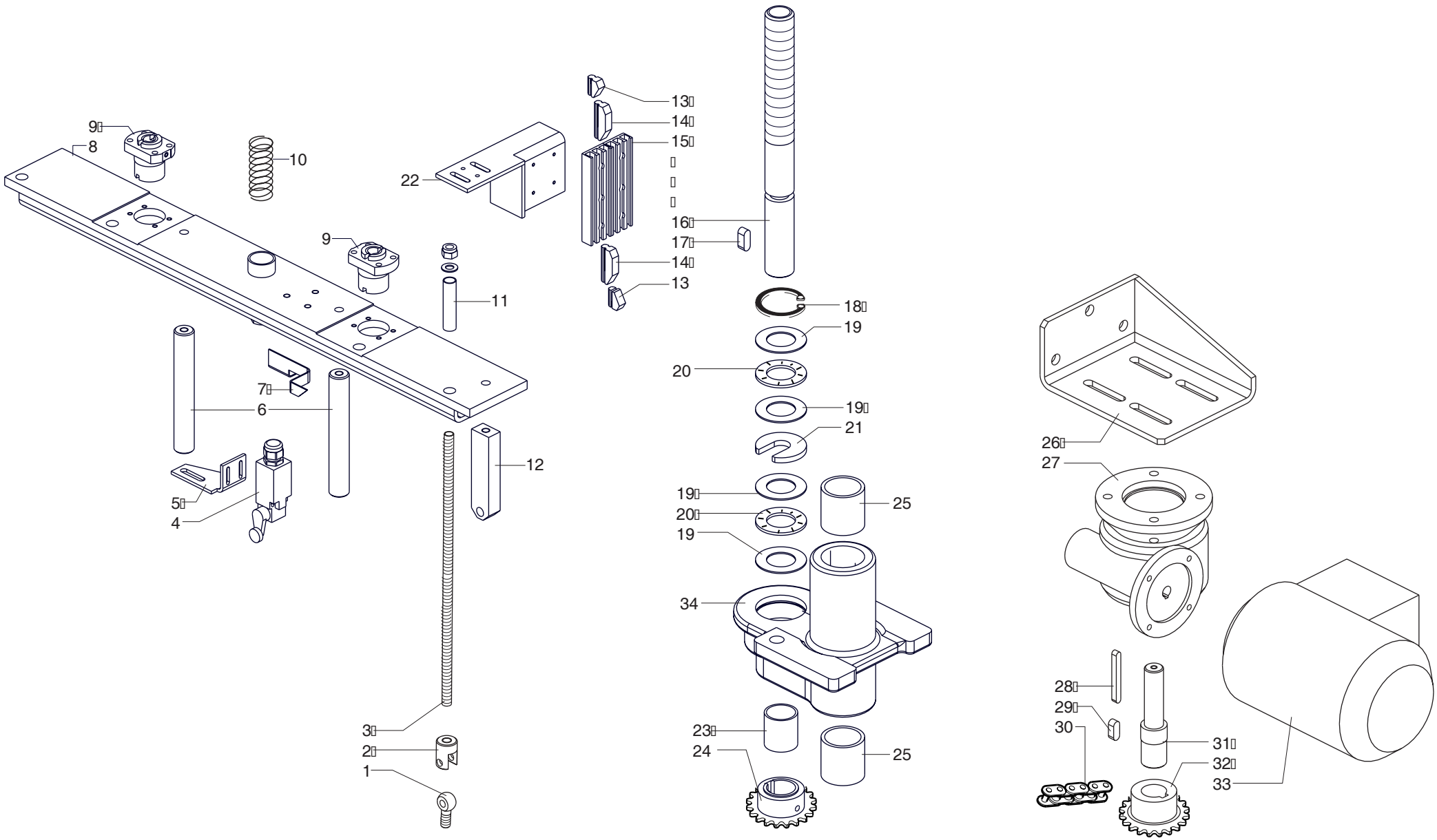


| | | | |
|---|---|---|---|
| scm | SUPERSET XL | REGISTRAZIONE MOTORIZZATA RUOTE TRAINO - (01.01.1901 -> - p.20,06,2007)<br>POWER ADJUSTMENT FOR FEED WHEELS - REGLAGE MOTORISE ROUES ENTRAINEMENT<br>MOTORBETR. EINSTELLUNG (DURCHZUGRAEDER) - REGULACION MOTORIZADA RUEDAS ARRASTRE | 227-0760-Y |

| scm | SUPERSET XL | REGISTRAZIONE MOTORIZZATA RUOTE TRAINO - (p.20,06,2007)<br>POWER ADJUSTMENT FOR FEED WHEELS - REGLAGE MOTORISE ROUES ENTRAINEMENT<br>MOTORBETR. EINSTELLUNG (DURCHZUGRAEDER) - REGULACION MOTORIZADA RUEDAS ARRASTRE | 227-0760-Z |
|---|---|---|---|

| N | P | C | CODICE | Q.TY | DENOMINAZIONE | DESCRIPTION | DESIGNATION | BEZEICHNUNG | DENOMINACION |
|---|---|---|---|---|---|---|---|---|---|
| | 01.01.1901 -> 01.01.3000 | | | | Note: ----- | | | | |
| | 1 | | 0322740027G | 4.00 | TIRANTE | TIE-ROD | TIRANT | ZUGBOLZEN | TIRANTE |
| | 2 | | 0322740804F | 4.00 | FORCELLA | FORK | FOURCHE | GABEL | HORQUILLA |
| | 3 | | 0322740816B | 4.00 | BARRA FILETTATA | THREADED BAR | BARRE | STANGE | BARRA |
| | 4 | | 0001307353B | 1.00 | FINECORSA | LIMIT SWITCH | FIN DE COURSE | ENDSCHALTER | FIN CARRERA |
| | 5 | | 0322740809G | 1.00 | STAFFA | BRACKET | BRIDE | BUEGEL | ABRAZADERA |
| | 6 | | 0322740805H | 2.00 | BARRA | BAR | BARRE | STANGE | BARRA |
| | 7 | | 0322740813E | 1.00 | INDICE | POINTER | INDICATEUR | ZEIGER | INDICE |
| | 8 | | 0522740802F | 1.00 | TRAVERSA | CROSS MEMBER | TRAVERSE | QUERBALKEN | PUENTE |
| | 9 | | 0316333847B | 2.00 | MADREVITE TPN.20X5 | NUT SCREW | VIS-MERE | MUTTERGEWINDE | TUERCA |
| | 10 | | 0310450901E | 1.00 | MOLLA | SPRING | RESSORT | FEDER | RESORTE |
| | 11 | | 0322740811A | 4.00 | TUBO | HOSE | TUYAU | SCHLAUCH | TUBO |
| | 12 | | 0322740810H | 1.00 | ATTACCO | CONNECTING ROD | BARRE FIXATION | STAB | CONEXION |
| | 13 | | 0001347322E | 2.00 | CAMMA TCX-00-24 | CAM | CAME | NOCKEN | EXCENTRICO |
| | 14 | | 0001340343B | 2.00 | CAMMA AZION. | CAM | CAME | TREIBNOCKEN | EXCENTRICO ACC. |
| | 15 | | 0319432915C | 1.00 | MADREVITE | NUT SCREW | VIS-MERE | MUTTERGEWINDE | TUERCA |
| | 16 | | 0322740808E | 2.00 | VITE | SCREW | VIS | SCHRAUBE | TORNILLO |
| | 17 | | 0000645184A | 2.00 | LINGUETTA | FEATHER KEY | LANGUETTE | FEDERKEIL | LINGUETA |
| | 18 | | 0000644036F | 2.00 | ANELLO SEEGER | CIRCLIP | CIRCLIP | SEEGERRING | SEEGER |
| | 19 | | 0000613045G | 8.00 | RALLA | WASHER | CRAPAUDINE | SCHEIBE | RANGUA |
| | 20 | | 0000613041H | 4.00 | GABBIA A RULLINI | ROLLER CAGE | CAGE A ROULEAUX | WALZENKAEFIG | COJINETE |
| | 21 | | 0316330020C | 2.00 | RONDELLA | WASHER | RONDELLE | SCHEIBE | ARANDELA |
| | 22 | | 0522740822H | 1.00 | STAFFA | BRACKET | BRIDE | BUEGEL | ABRAZADERA |
| | 23 | | 0000601446D | 4.00 | BOCCOLA AUTOL. | SELF-LUBRICATING BUSH | DOUILLE AUTOLUBRIFIANTE | SELBSTSCHMIER. BUCHSE | ANILL.AUTOLUB. |
| | 24 | | 0319430407C | 2.00 | CORONA DENTATA | SPROCKET | PIGNON | RITZEL | RUEDA DENTADA |
| | 25 | | 0000601113G | 4.00 | BOCCOLA | BUSHING | DOUILLE | BUCHSE | CASQUILLO |
| | 26 | | 0322740815L | 1.00 | SUPPORTO | SUPPORT | SUPPORT | STUETZE | SOPORTE |
| | 27 | | 0000639401D | 1.00 | RIDUTTORE | GEAR UNIT | REDUCTEUR | GETRIEBE | REDUCTOR |
| | 28 | | 0000645308E | 1.00 | LINGUETTA | FEATHER KEY | LANGUETTE | FEDERKEIL | LINGUETA |
| | 29 | | 0000645043B | 1.00 | LINGUETTA | FEATHER KEY | LANGUETTE | FEDERKEIL | LINGUETA |
| | 30 | | 0000602214C | 1.00 | CATENA | CHAIN | CHAINE | KETTE | CADENA |
| | 31 | | 0322740806A | 1.00 | ALBERO | SHAFT | ARBRE | WELLE | EJE |
| | 32 | | 0722740030B | 1.00 | PIGNONE | SPROCKET | PIGNON | RITZEL | PIÑON |
| | 33 | | 0001337883C | 1.00 | MOTORE TRIF. | 3.PH. MOTOR | 3 PH. MOTEUR | 3-DREIPHASENMOTOR | MOT. TRIFAS |
| | 34 | | 0322740807C | 2.00 | SUPPORTO | SUPPORT | SUPPORT | STUETZE | SOPORTE |

2270760x

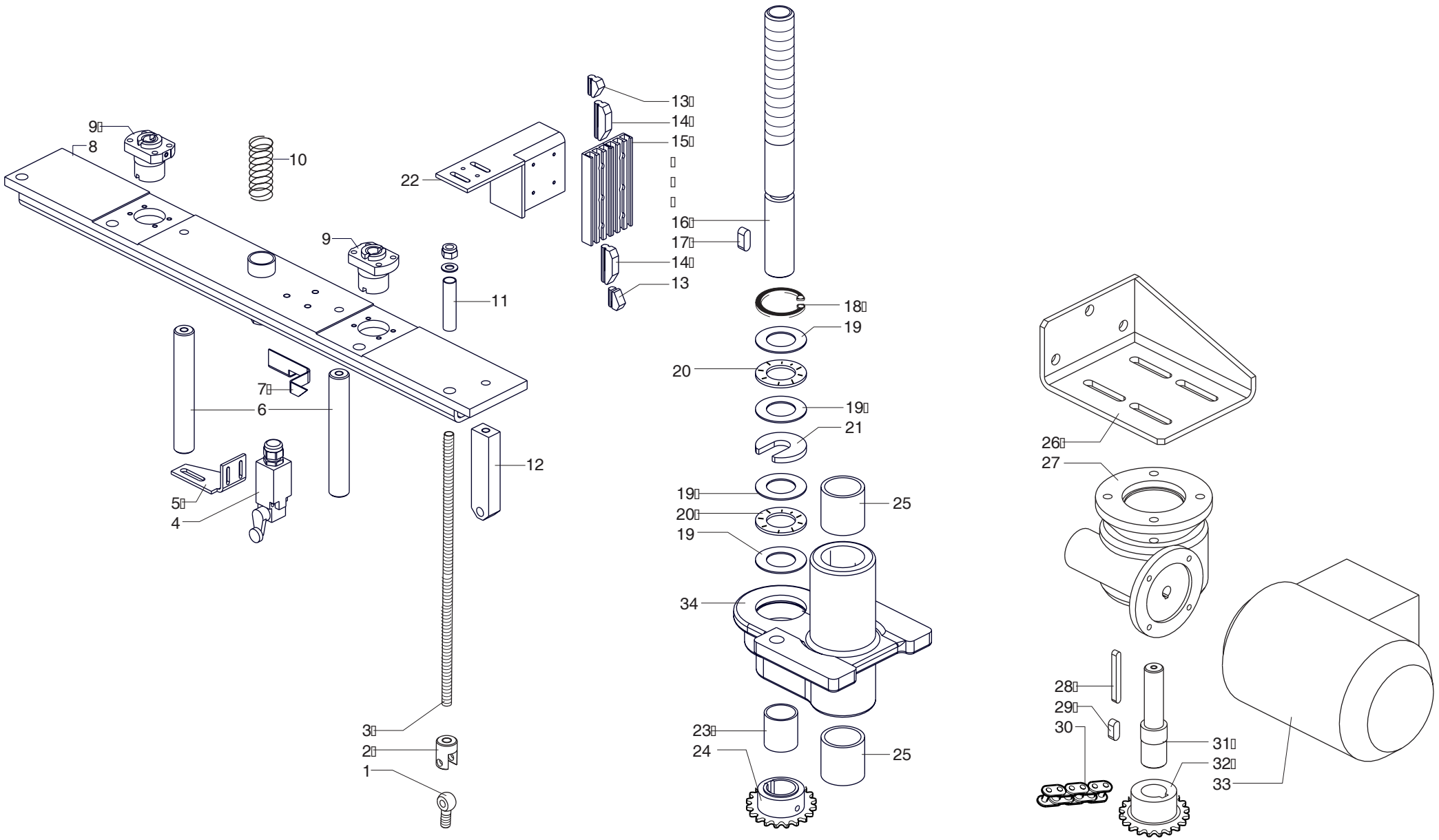


| | | | |
|---|---|---|---|
| scm | SUPERSET XL | REGISTRAZIONE MOTORIZZATA RUOTE TRAINO - (01.01.1901 -> - p.20,06,2007)<br>POWER ADJUSTMENT FOR FEED WHEELS - REGLAGE MOTORISE ROUES ENTRAINEMENT<br>MOTORBETR. EINSTELLUNG (DURCHZUGRAEDER) - REGULACION MOTORIZADA RUEDAS ARRASTRE | 227-0760-Z |

| scm | SUPERSET XL | GR. SPIGOLATORE - (p.20,06,2007)<br>CORNER CHAMFERING UNIT - GROUPE DE CHANFREINAGE DERRIERE ARBRE HO<br>FASEAGGREGAT - | 227-0770-0 |
|---|---|---|---|

| N | P | C | CODICE | Q.TY | DENOMINAZIONE | DESCRIPTION | DESIGNATION | BEZEICHNUNG | DENOMINACION |
|---|---|---|---|---|---|---|---|---|---|
| | 01.01.1901 -> 01.01.3000 | | | | Note: ----- | | | | |
| | 1 | | 0322732230G | 1.00 | SUPPORTO | SUPPORT | SUPPORT | STUETZE | SOPORTE |
| | 2 | | 0322732213B | 1.00 | TARGA | RATING PLATE | PLAQUE | SCHILD | TARJETA |
| | 3 | | 0322732214D | 1.00 | CAMMA | CAM | CAME | NOCKEN | EXCENTRICO |
| | 4 | | 0000301368E | 1.00 | DADO | NUT | ECROU | MUTTER | TUERCA |
| | 8 | | 0001503268L | 1.00 | CILINDRO PNEUMATICO | PNEUMATIC CYLINDER | CYLINDRE PNEUMATIQUE | PNEUMATIKZYLINDER | CILINDRO NEUMATICO |
| | 9 | | 0522732202C | 1.00 | SUPPORTO | SUPPORT | SUPPORT | STUETZE | SOPORTE |
| | 11 | | 0322732206G | 1.00 | LAMIERA | PLATE | TOLE | BLECH | CHAPA |
| | 12 | | 0736223847L | 2.00 | GUIDA C/PATTINO SFERE | GUIDE WITH BALL BLOCK | GUIDE AVEC PATIN | FUEHRUNG MIT GLEITSCHUH | GUIA CON PATIN REC.ESF. |
| | 13 | | 0775190005F | 1.00 | MOTORE | MOTOR | MOTEUR | MOTOR | MOTOR |
| | 14 | | 0722765200C | 1.00 | FRESA | | | | |
| | 15 | | 0322732204C | 1.00 | SUPPORTO | SUPPORT | SUPPORT | STUETZE | SOPORTE |
| | 16 | | 0522732203E | 1.00 | CUFFIA | HOOD | HOTTE | HAUBE | CAMPANA |
| | 17 | | 2922780101H | 1.00 | GR.SPIGOLATORE | | | | |
| | 18 | | 0322732215F | 1.00 | TARGA | RATING PLATE | PLAQUE | SCHILD | TARJETA |
| | 19 | | 0322732205E | 1.00 | GOMMA | RUBBER | GOMME | GUMMI | GOMA |
| | 20 | | 0539055800H | 1.00 | BATTUTA | STOP | BUTEE | ANSCHLAG | TOPE |
| | 21 | | 0522732228H | 1.00 | SUPPORTO | SUPPORT | SUPPORT | STUETZE | SOPORTE |
| | 22 | | 0522732201A | 1.00 | SUPPORTO | SUPPORT | SUPPORT | STUETZE | SOPORTE |
| | 23 | | 0322732231L | 1.00 | PIATTO | PLATE | PLAT | PLATTE | PLATO |
| | 24 | | 0000640385B | 2.00 | TUBO D=80 | HOSE | TUYAU | SCHLAUCH | TUBO |

2922780101h1

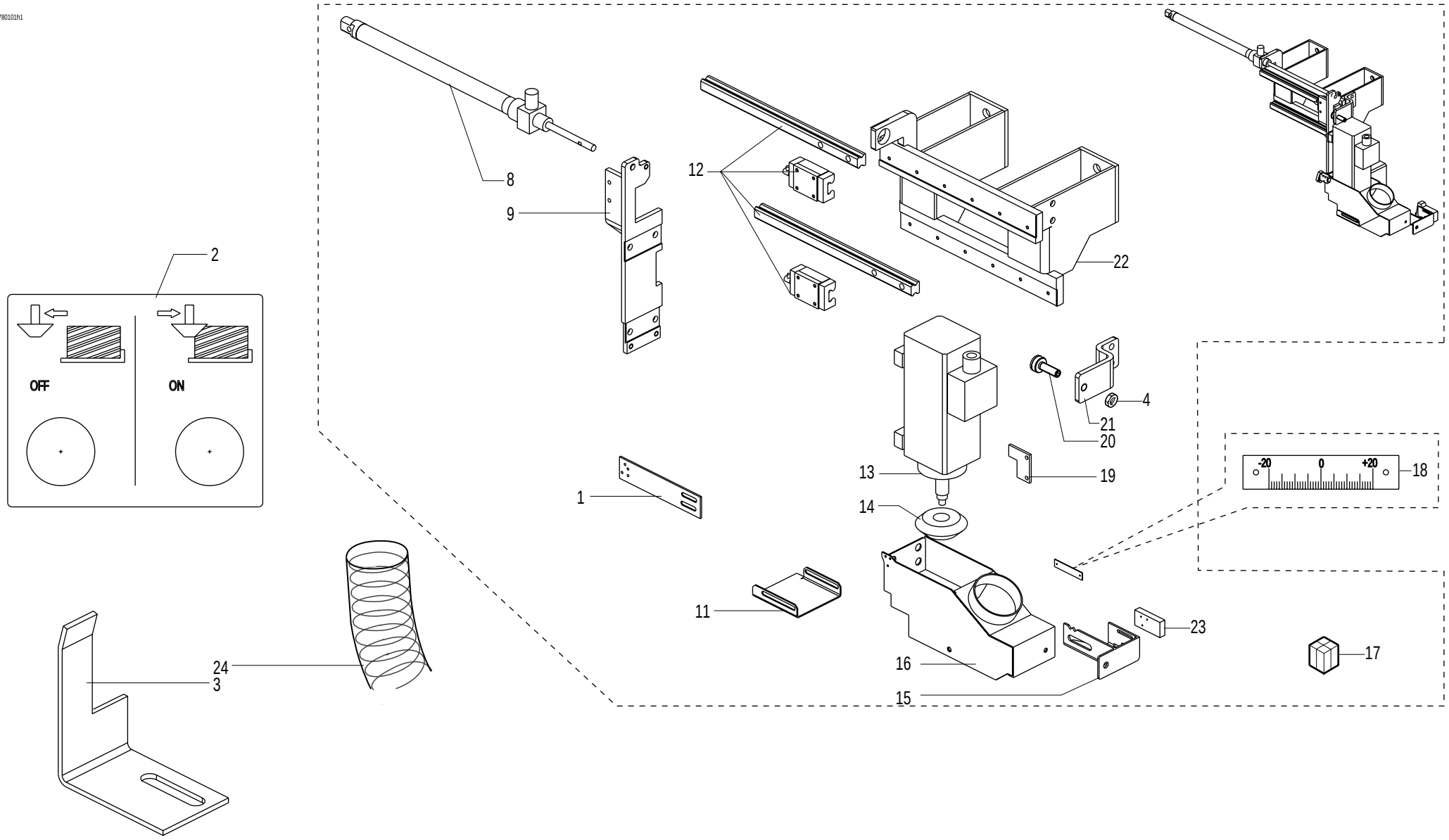


| | | | |
|---|---|---|---|
| scm | SUPERSET XL | GR. SPIGOLATORE - (01.01.1901 -> - p.20,06,2007)<br>CORNER CHAMFERING UNIT - GROUPE DE CHANFREINAGE DERRIERE ARBRE HO<br>FASEAGGREGAT - | 227-0770-0 |

| N | P | C | CODICE | Q.TY | DENOMINAZIONE | DESCRIPTION | DESIGNATION | BEZEICHNUNG | DENOMINACION |
|---|---|---|---|---|---|---|---|---|---|
| | 01.01.1900 -> 01.01.3000 | | | | Note: 3022710501C | | | | |
| | 1 | | 0002319123A | 1.00 | CHIAVE (ATTREZZO) | WRENCH | CLEF | SCHLUESSEL | LLAVE |
| | 2 | | 0002319124C | 1.00 | CHIAVE (ATTREZZO) | WRENCH | CLEF | SCHLUESSEL | LLAVE |
| | 3 | | 0002319125E | 1.00 | CHIAVE (ATTREZZO) | WRENCH | CLEF | SCHLUESSEL | LLAVE |
| | 4 | | 0002319126G | 1.00 | CHIAVE (ATTREZZO) | WRENCH | CLEF | SCHLUESSEL | LLAVE |
| | 5 | | 0002319128B | 1.00 | CHIAVE (ATTREZZO) | WRENCH | CLEF | SCHLUESSEL | LLAVE |
| | 6 | | 0002319138C | 1.00 | CHIAVE (ATTREZZO) | WRENCH | CLEF | SCHLUESSEL | LLAVE |
| | 7 | | 0002319129D | 1.00 | CHIAVE (ATTREZZO) | WRENCH | CLEF | SCHLUESSEL | LLAVE |
| | 8 | | 0002319130E | 1.00 | CHIAVE (ATTREZZO) | WRENCH | CLEF | SCHLUESSEL | LLAVE |
| | 9 | | 0002345506F | 1.00 | OLIATORE (STRUMENTO) | OILER | RAISSEUR | OELBUECHSE | ACEITADOR |
| | 10 | | 0002319377L | 1.00 | CHIAVE (ATTREZZO) | WRENCH | CLEF | SCHLUESSEL | LLAVE |
| | 11 | | 0002319443L | 1.00 | CHIAVE (ATTREZZO) | WRENCH | CLEF | SCHLUESSEL | LLAVE |
| | 12 | | 0002341050C | 1.00 | CASSETTA | BOX | CAISSE | KASTEN | CAJITA |
| | 13 | | 0002319223C | 1.00 | CHIAVE (ATTREZZO) | WRENCH | CLEF | SCHLUESSEL | LLAVE |
| | 14 | | 0002319435C | 1.00 | CHIAVE (ATTREZZO) | WRENCH | CLEF | SCHLUESSEL | LLAVE |
| | 15 | | 0306330203A | 1.00 | CHIAVE (ATTREZZO) | WRENCH | CLEF | SCHLUESSEL | LLAVE |
| | 16 | | 0002401040D | 0.21 | GRASSO | GREASE | GRAISSE | SCHMIERFETT | GRASA |
| | 17 | | 0002347563H | 1.00 | SIRINGA DI LUBRIFICAZIONE | LUBRICATION GUN | SERINGUE DE GRAISSAGE | SCHMIERPRESSE | ERINGA DE LUBRICACION |
| | 18 | | 0000616057F | 1.00 | ATTACCO | CONNECTING ROD | BARRE FIXATION | STAB | CONEXION |
| | 19 | | 0000616058H | 1.00 | TESTINA | HEAD | TETE | KOPF | CABEZAL |
| | 20 | | 2719461305E | 1.00 | CASSETTA ATTREZZI | TOOLS BOX | CAISSE OUTILS | WERKZEUGKASTEN | CAJA HERRAMIENTAS |
| | 21 | | 0002319426D | 1.00 | CHIAVE (ATTREZZO) | WRENCH | CLEF | SCHLUESSEL | LLAVE |
| | 22 | | 2903048101A | 1.00 | MANIGLIA | HANDLE | POIGNEE | HANDGRIFF | MANIJA |
| | 23 | | 0519410084F | 1.00 | MANOVELLA | CRANK | MANIVELLE | KURBEL | MANIVELA |
| | 24 | | 2716048201F | 1.00 | BLOCCAGGIO | LOCKING DEVICE | BLOCAGE | SPERRE | BLOQUEO |
| | 25 | | 0516330380A | 1.00 | PROLUNGA | EXTENSION | RALLONGE | VERLAENGERUNG | EXTENSION |
| | 26 | | 2719090201E | 1.00 | SERIE CHIAVI (ATTREZZI) | WRENCH SET | JEU DE CLEFS | SCHLUESSELNSATZ | JUEGO DE LLAVES |
| | 27 | | 2939075101A | 1.00 | SIRINGA CON GRASSO | LUBRICATION GUN | SERINGUE DE GRAISSAGE | SCHMIERPRESSE | ERINGA DE LUBRICACION |
| | 28 | | 0319441202A | 1.00 | RUOTA | WHEEL | ROUE | RAD | RUEDA |
| | 29 | | 0519441208H | 1.00 | RULLO GOMMATO | ROLLER | ROULEAU | WALZE | RODILLO |
| | 30 | | 0310140226G | 1.00 | RULLO ZIGRINATO | ROLLER | ROULEAU | WALZE | RODILLO |
| | 31 | | 0002319122H | 1.00 | CHIAVE (ATTREZZO) | WRENCH | CLEF | SCHLUESSEL | LLAVE |
| | 32 | | 0324140005H | 1.00 | RULLO | ROLLER | ROULEAU | WALZE | RODILLO |
| | 33 | | 0319441207B | 2.00 | RULLO H=10 | ROLLER | ROULEAU | WALZE | RODILLO |
| | 33 | | 0319441227D | 2.00 | RULLO H=8 (SPEC) | ROLLER | ROULEAU | WALZE | RODILLO |
| | 34 | | 2710104900D | 1.00 | PRESET ALBERO | SPINDLE PRESET | PREREGLAGE ARBRE | VOREINSTELLUNG DER WELLE | PRESET EJE |
| | 35 | | 2710104100F | 1.00 | PRESET ALBERO | SPINDLE PRESET | PREREGLAGE ARBRE | VOREINSTELLUNG DER WELLE | PRESET EJE |
| | 36 | | 0321420843H | 1.00 | BARRETTA RISCONTRO | BAR | BARRE | PRUEFSTAB | BARRA CONTROL |
| | 36 | | 0321920508D | 1.00 | BARRA | BAR | BARRE | STANGE | BARRA |
| | 37 | | 0310140231G | 1.00 | RULLO | ROLLER | ROULEAU | WALZE | RODILLO |

| N | P | C | CODICE | Q.TY | DENOMINAZIONE | DESCRIPTION | DESIGNATION | BEZEICHNUNG | DENOMINACION |
|---|---|---|---|---|---|---|---|---|---|
| | 38 | | 2719440113B | 1.00 | CHIAVETTA | KEY | CLAVETTE | KEIL | CHAVETA |
| | 39 | | 2722765101E | 1.00 | KIT PIALLA L=235 | CUTTERHEAD | PORTE-OUTIL | MESSERKOPF | CEPILLO |
| | 39 | | 2722765104B | 1.00 | KIT PIALLA L=235 | CUTTERHEAD | PORTE-OUTIL | MESSERKOPF | CEPILLO |
| | 40 | | 2722765102G | 1.00 | LIT PIALLA L=135 | CUTTERHEAD | PORTE-OUTIL | MESSERKOPF | CEPILLO |
| | 40 | | 2722765105D | 1.00 | KIT PIALLA L=135 | CUTTERHEAD | PORTE-OUTIL | MESSERKOPF | CEPILLO |
| | 41 | | 2722765103L | 1.00 | KIT PIALLA L=100 | CUTTERHEAD | PORTE-OUTIL | MESSERKOPF | CEPILLO |
| | 41 | | 2722765106F | 1.00 | KIT PIALLA L=100 | CUTTERHEAD | PORTE-OUTIL | MESSERKOPF | CEPILLO |
| | 42 | | 2739074300G | 1.00 | FRESA RASANTE | REFERENCE ENGRAVER | FRAISE DE REFERENCE | FUEGEFALZFRAESER | FRESA RASANTE |
| | 42 | | 2739074301L | 1.00 | FRESA RASANTE | REFERENCE ENGRAVER | FRAISE DE REFERENCE | FUEGEFALZFRAESER | FRESA RASANTE |
| | 43 | | 2710105600H | 1.00 | ASS.CAVO RS232 | ASS.CAVO RS232 | ASS.CAVO RS232 | ASS.CAVO RS232 | ASS.CAVO RS232 |
| | 44 | | 0001353217A | 1.00 | ETICH.ADESIVE 72X49 | ETICH.ADESIVE 72X49 | ETICH.ADESIVE 72X49 | ETICH.ADESIVE 72X49 | ETICH.ADESIVE 72X49 |
| | 45 | | 0001353149F | 1.00 | STAMPANTE | PRINTER | IMPRIMANTE | DRUCKER | IMPRESORA |
| | 46 | | 2939067101A | 1.00 | REGISTRACOLTELLI | KNIFE-SETTING GAUGE | APPAREIL REGLAGE COUTEAUX | MESSEREINSTELLEHRE | DISP. REG. CUCHILLAS |
| | 47 | | 0519480202C | 1.00 | SUPPORTO | SUPPORT | SUPPORT | STUETZE | SOPORTE |
| | 48 | | 0319480205E | 1.00 | PATTINO PRESSATORE | SLIDING SHOE | PATIN | GLEITSCHUH | PATIN |
| | 49 | | 2710101600D | 1.00 | RUOTA LIBERA | WHEEL | ROUE | RAD | RUEDA |
| | 49 | | 2710105400D | 1.00 | ASS. RUOTA LIBERA | WHEEL | ROUE | RAD | RUEDA |
| | 50 | | 0002319132L | 1.00 | CHIAVE (ATTREZZO) | WRENCH | CLEF | SCHLUESSEL | LLAVE |
| | 51 | | 0002319392A | 1.00 | CHIAVE (ATTREZZO) | WRENCH | CLEF | SCHLUESSEL | LLAVE |
| | 52 | | 0322740015B | 4.00 | RUOTA DENTATA | GEAR WHEEL | ROUE DENTEE | ZAHNRAD | RUEDA DENTADA |
| | 53 | | 2722701004B | 4.00 | CHIAVETTA | KEY | CLAVETTE | KEIL | CHAVETA |
| | 54 | | 0319441203C | 2.00 | DISTANZIALE | SPACER | ENTRETOISE | DISTANZSTUECK | DISTANCIADOR |
| | 55 | | 0519441211D | 2.00 | RUOTA GOMMATA STRETTA | THIN RUBBER WHEEL | ROUE EN CAOUTCHOUC MINCHE | DUENNES GUMMIRAD | RUEDA GOM. ANGOSTA |
| | 56 | | 0524140009B | 2.00 | RUOTA GOMMATA STRETTA | THIN RUBBER WHEEL | ROUE EN CAOUTCHOUC MINCHE | DUENNES GUMMIRAD | RUEDA GOM. ANGOSTA |
| | 57 | | 0522730632C | 1.00 | SCARPA PRESSATORE | SHOE | SABOT | DRUCKSCHUH | PLANCHA PRENSORA |
| | 58 | | 0321940815L | 1.00 | ANELLO | RING | BAGUE | RING | ANILLO |

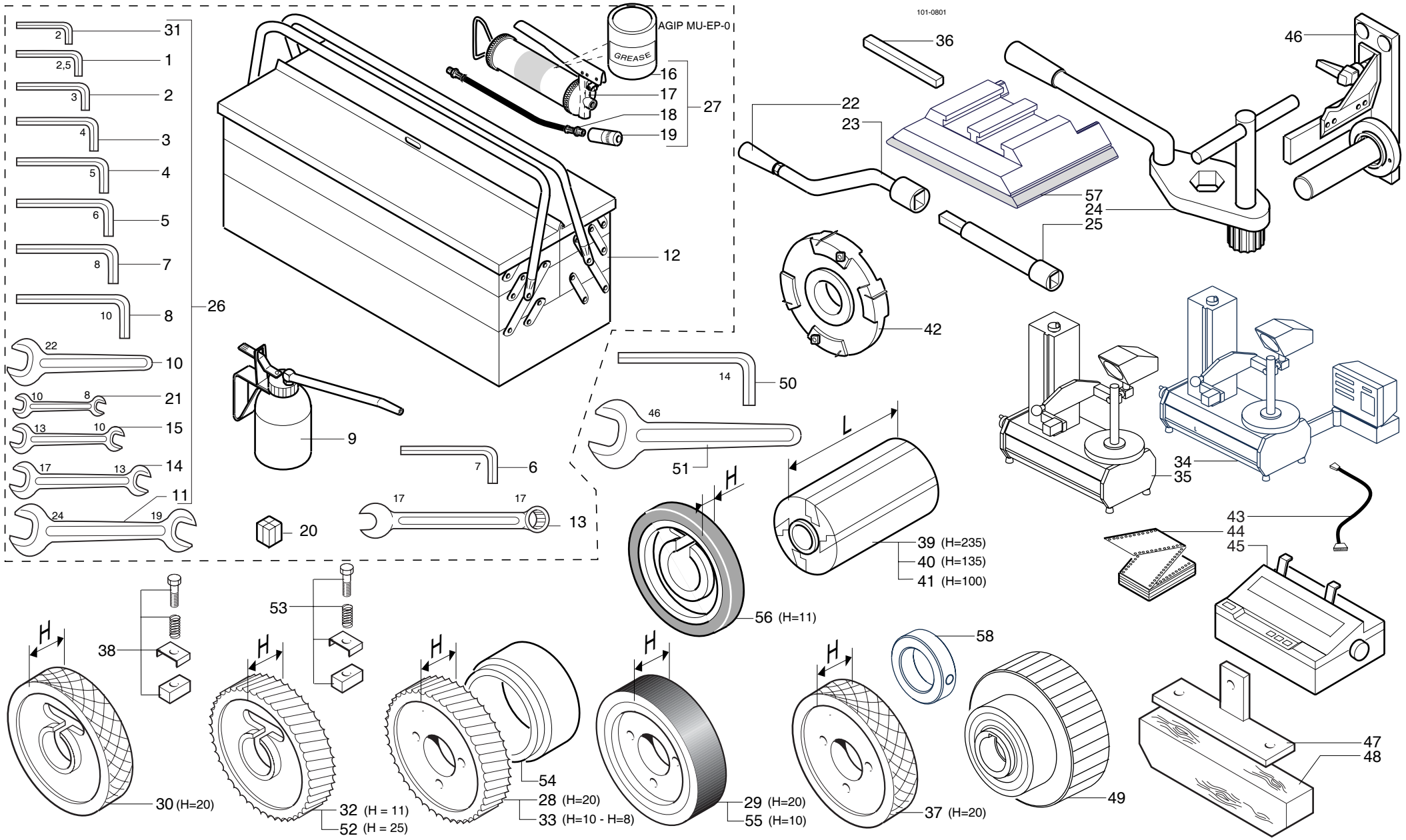


| | | | |
|---|---|---|---|
| scm | SUPERSET XL | ACCESSORI A CORREDO - (01.01.1901 -> - p.20,06,2007)<br>STANDARD ACCESSORIES - ACCESSOIRES STANDARD<br>STANDARD ZUBEHOER - ACCESORIOS DE EQUIPAMIENTO | 227-0801-0 |

| N | P | C | CODICE | Q.TY | DENOMINAZIONE | DESCRIPTION | DESIGNATION | BEZEICHNUNG | DENOMINACION |
|---|---|---|---|---|---|---|---|---|---|
| | 01.01.1901 -> 01.01.3000 | | | | Note: 2821901404C | | | | |
| | 1 | | 0000305159F | 6.00 | ROSETTA H 0,1 | WASHER | RONDELLE | SCHEIBE | ARANDELA |
| | 1 | | 0000305850B | 2.00 | ANELLO H 0,1 | RING | BAGUE | RING | ANILLO |
| | 1 | | 0722765031D | 6.00 | ANELLO H 0,1 | RING | BAGUE | RING | ANILLO |
| | 2 | | 0000305851D | 2.00 | ANELLO H 0,2 | RING | BAGUE | RING | ANILLO |
| | 3 | | 0310120332G | 2.00 | BOCCOLA H 9,75 | BUSHING | DOUILLE | BUCHSE | CASQUILLO |
| | 3 | | 0310120353B | 2.00 | BOCCOLA H 9,75 | *TRAD MANCANTE* | *TRAD MANCANTE* | *TRAD MANCANTE* | *TRAD MANCANTE* |
| | 3 | | 0319432501D | 2.00 | ANELLO H 9,75 | RING | BAGUE | RING | ANILLO |
| | 4 | | 0310120319A | 7.00 | BOCCOLA H 12 | BUSHING | DOUILLE | BUCHSE | CASQUILLO |
| | 4 | | 0310120331E | 8.00 | BOCCOLA H 12 | BUSHING | DOUILLE | BUCHSE | CASQUILLO |
| | 4 | | 0310120352L | 8.00 | BOCCOLA H 12 | *TRAD MANCANTE* | *TRAD MANCANTE* | *TRAD MANCANTE* | *TRAD MANCANTE* |
| | 5 | | 0722765001A | 1.00 | FRESE PER PIANO SCANALATO | | | | |
| | 5 | | 0722765002C | 1.00 | FRESE PER PIANO SCANALATO | *TRAD MANCANTE* | *TRAD MANCANTE* | *TRAD MANCANTE* | *TRAD MANCANTE* |
| | 5 | | 0722765003E | 1.00 | FRESE PER PIANO SCANALATO | *TRAD MANCANTE* | *TRAD MANCANTE* | *TRAD MANCANTE* | *TRAD MANCANTE* |
| | 6 | | 0721900301H | 1.00 | FRESA RASANTE | REFERENCE ENGRAVER | FRAISE DE REFERENCE | FUEGEFALZFRAESER | FRESA RASANTE |
| | 6 | | 0721900302A | 1.00 | FRESA RASANTE | REFERENCE ENGRAVER | FRAISE DE REFERENCE | FUEGEFALZFRAESER | FRESA RASANTE |
| | 6 | | 0721900303C | 1.00 | FRESA RASANTE | REFERENCE ENGRAVER | FRAISE DE REFERENCE | FUEGEFALZFRAESER | FRESA RASANTE |
| | 6 | | 0721900304E | 1.00 | FRESA RASANTE | REFERENCE ENGRAVER | FRAISE DE REFERENCE | FUEGEFALZFRAESER | FRESA RASANTE |
| | 6 | | 0721900305G | 1.00 | FRESA RASANTE | REFERENCE ENGRAVER | FRAISE DE REFERENCE | FUEGEFALZFRAESER | FRESA RASANTE |
| | 6 | | 0721900306L | 1.00 | FRESA RASANTE | REFERENCE ENGRAVER | FRAISE DE REFERENCE | FUEGEFALZFRAESER | FRESA RASANTE |
| | 6 | | 0721900316A | 1.00 | FRESA RASANTE | REFERENCE ENGRAVER | FRAISE DE REFERENCE | FUEGEFALZFRAESER | FRESA RASANTE |
| | 7 | | 0310830320B | 1.00 | ANELLO H3 D=40 | RING | BAGUE | RING | ANILLO |
| | 7 | | 0310839365G | 1.00 | ANELLO H3 D=50 | RING | BAGUE | RING | ANILLO |
| | 7 | | 0319433001D | 1.00 | ANELLO H3 D=1"13/16 | RING | BAGUE | RING | ANILLO |
| | 8 | | 0310830319A | 1.00 | ANELLO H5 D=40 | RING | BAGUE | RING | ANILLO |
| | 8 | | 0310839373D | 1.00 | ANELLO H5 D=50 | RING | BAGUE | RING | ANILLO |
| | 8 | | 0319433002F | 1.00 | ANELLO H5 D=1"13/16 | RING | BAGUE | RING | ANILLO |
| | 9 | | 0310830318H | 1.00 | ANELLO H7 D=40 | RING | BAGUE | RING | ANILLO |
| | 9 | | 0310839363C | 1.00 | ANELLO H7 D=50 | RING | BAGUE | RING | ANILLO |
| | 9 | | 0319433003H | 1.00 | ANELLO H7 D=1"13/16 | RING | BAGUE | RING | ANILLO |
| | 10 | | 0310830331E | 1.00 | ANELLO H15 D=40 | RING | BAGUE | RING | ANILLO |
| | 10 | | 0310839370G | 1.00 | ANELLO H15 D=50 | RING | BAGUE | RING | ANILLO |
| | 10 | | 0319433004A | 1.00 | ANELLO H15 D=1"13/16 | RING | BAGUE | RING | ANILLO |
| | 11 | | 0310830332G | 1.00 | ANELLO H20 D=40 | RING | BAGUE | RING | ANILLO |
| | 11 | | 0310839371L | 1.00 | ANELLO H20 D=50 | RING | BAGUE | RING | ANILLO |
| | 11 | | 0319433005C | 1.00 | ANELLO H20 D=1"13/16 | RING | BAGUE | RING | ANILLO |
| | 12 | | 0310830333L | 4.00 | ANELLO H25 D=40 | RING | BAGUE | RING | ANILLO |
| | 12 | | 0310839372B | 4.00 | ANELLO H25 D=50 | RING | BAGUE | RING | ANILLO |
| | 12 | | 0319433006E | 4.00 | ANELLO H25 D=1"13/16 | RING | BAGUE | RING | ANILLO |
| | 13 | | 0321941006D | 2.00 | BOCCOLA | BUSHING | DOUILLE | BUCHSE | CASQUILLO |

| N | P | C | CODICE | Q.TY | DENOMINAZIONE | DESCRIPTION | DESIGNATION | BEZEICHNUNG | DENOMINACION |
|---|---|---|---|---|---|---|---|---|---|
| | 13 | | 0321941007F | 2.00 | BOCCOLA | BUSHING | DOUILLE | BUCHSE | CASQUILLO |
| | 14 | | 2721941001D | 1.00 | PRESET ALBERO | SPINDLE PRESET | PREREGLAGE ARBRE | VOREINSTELLUNG DER WELLE | PRESET EJE |
| | 14 | | 2721941002F | 1.00 | PRESET ALBERO | SPINDLE PRESET | PREREGLAGE ARBRE | VOREINSTELLUNG DER WELLE | PRESET EJE |
| | 15 | | 0327330105G | 5.00 | ANELLO H=7 D=1'1/2 | RING | BAGUE | RING | ANILLO |
| | 16 | | 0310830333L | 1.00 | ANELLO H25 D=40 | RING | BAGUE | RING | ANILLO |
| | 100 | | 2723838663G | 5.00 | SERIE ANELLI D=35 | SET OF RINGS | JEU DE BAGUES | SATZ RINGE | SERIE ANILLOS |
| | 101 | | 2723838801A | 5.00 | SERIE ANELLI D=1'1/2 | SET OF RINGS | JEU DE BAGUES | SATZ RINGE | SERIE ANILLOS |

227-0802

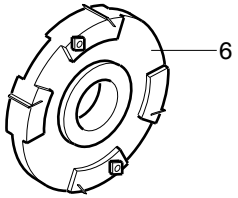


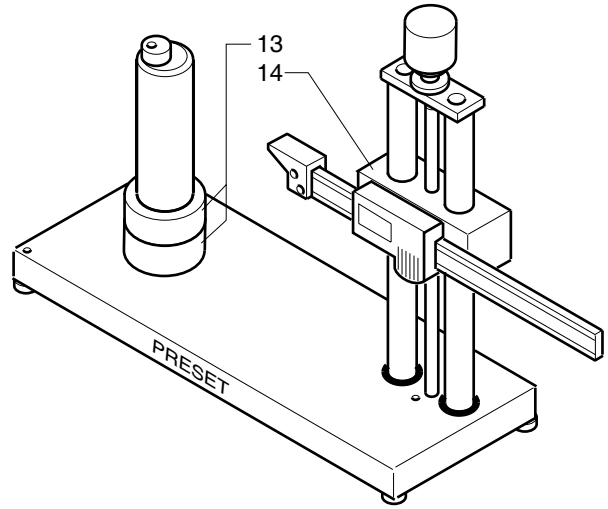


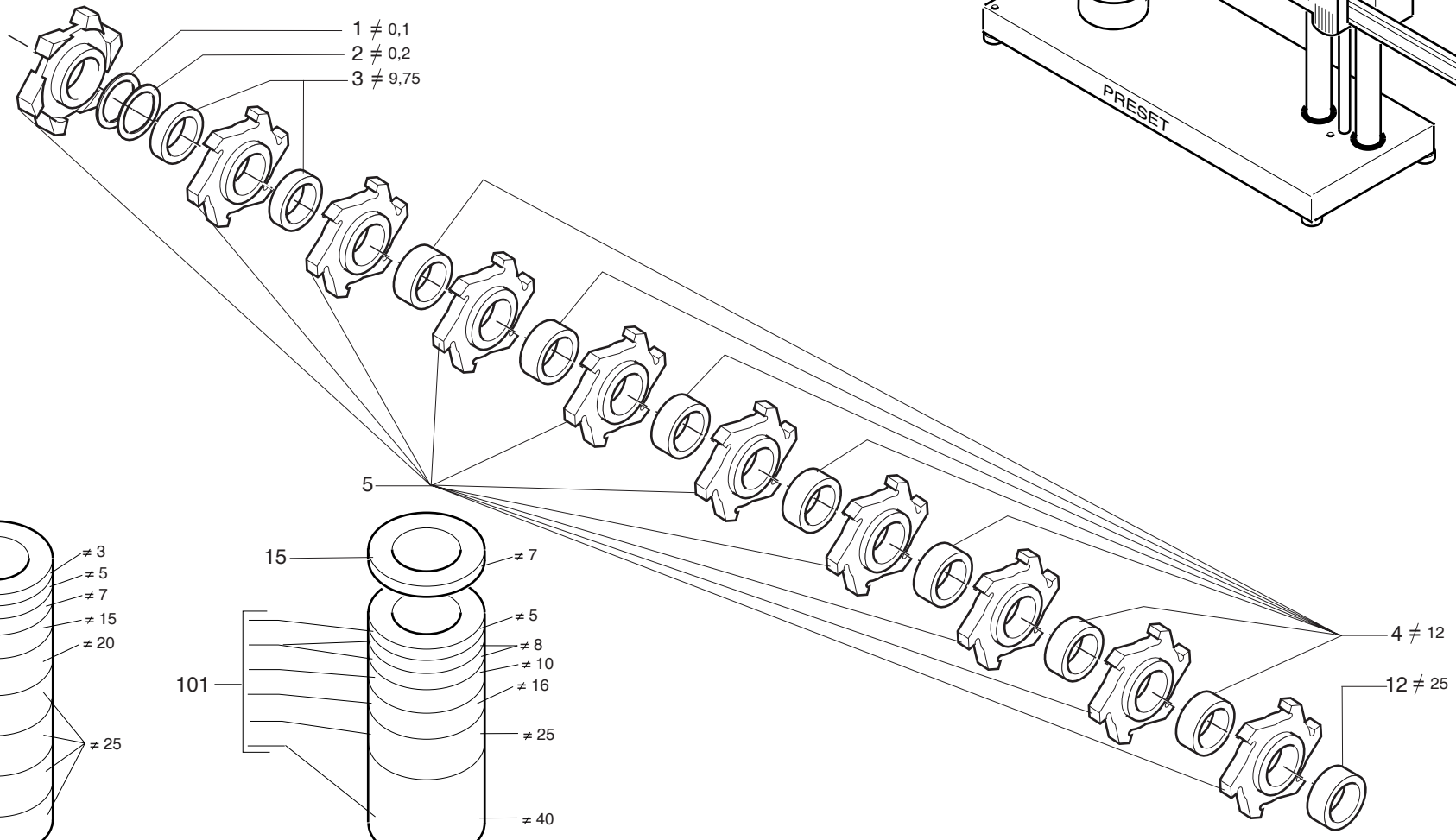


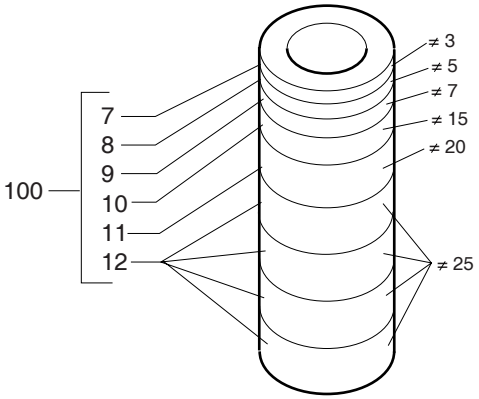





scm

**SUPERSET XL**

**ACCESSORI A CORREDO - (01.01.1901 ->  - p.20,06,2007)**
**STANDARD ACCESSORIES - ACCESSOIRES STANDARD**
**ZUBEHOER - ACCESORIOS DE EQUIPAMIENTO**

**227-0802-0**

| N | P | C | CODICE | Q.TY | DENOMINAZIONE | DESCRIPTION | DESIGNATION | BEZEICHNUNG | DENOMINACION |
|---|---|---|---|---|---|---|---|---|---|
| | 01.01.1901 -> 01.01.3000 | | | | Note: 3022775000H | | | | |
| | 1 | | 0302110184D | 1.00 | TARGA | RATING PLATE | PLAQUE | SCHILD | TARJETA |
| | 1 | | 0302110185F | 1.00 | TARGA | RATING PLATE | PLAQUE | SCHILD | TARJETA |
| | 1 | | 0302110186H | 1.00 | TARGA | RATING PLATE | PLAQUE | SCHILD | TARJETA |
| | 1 | | 0302110187A | 1.00 | TARGA | RATING PLATE | PLAQUE | SCHILD | TARJETA |
| | 1 | | 0302110188C | 1.00 | TARGA | RATING PLATE | PLAQUE | SCHILD | TARJETA |
| | 1 | | 0302110192A | 1.00 | TARGA | PLATE | PLAQUE | SCHILD | TARJETA |
| | 1 | | 0302110196L | 1.00 | TARGA | PLATE | PLAQUE | SCHILD | TARJETA |
| | 1 | | 0302110197B | 1.00 | TARGA | PLATE | PLAQUE | SCHILD | TARJETA |
| | 1 | | 0302110198D | 1.00 | TARGA | PLATE | PLAQUE | SCHILD | TARJETA |
| | 1 | | 0302110199F | 1.00 | TARGA | PLATE | PLAQUE | SCHILD | TARJETA |
| | 1 | | 0302110200H | 1.00 | TARGA | PLATE | PLAQUE | SCHILD | TARJETA |
| | 1 | | 0302110201A | 1.00 | TARGA | PLATE | PLAQUE | SCHILD | TARJETA |
| | 1 | | 0302110202C | 1.00 | TARGA | PLATE | PLAQUE | SCHILD | TARJETA |
| | 2 | | 0321910785H | 1.00 | TARGA SOLLEVAMENTO | PLATE | PLAQUE | SCHILD | TARJETA |
| | 3 | | 0322775017H | 1.00 | TARGA | RATING PLATE | PLAQUE | SCHILD | TARJETA |
| | 4 | | 0302110066D | 1.00 | TARGA | PLATE | PLAQUE | SCHILD | TARJETA |
| | 5 | | 0321910795L | 1.00 | TARGHETTA | RATING PLATE | PLAQUETTE | SCHILD | TARJETA |
| | 6 | | 0322775001D | 1.00 | TARGA | PLATE | PLAQUE | SCHILD | TARJETA |
| | 6 | | 0322775002F | 1.00 | TARGA | PLATE | PLAQUE | SCHILD | TARJETA |
| | 6 | | 0322775003H | 1.00 | TARGA | PLATE | PLAQUE | SCHILD | TARJETA |
| | 7 | | 0310110462A | 1.00 | TARGA | RATING PLATE | PLAQUE | SCHILD | TARJETA |
| | 8 | | 0322775041H | 1.00 | TARGA | RATING PLATE | PLAQUE | SCHILD | TARJETA |
| | 8 | | 0322775044E | 1.00 | TARGA | RATING PLATE | PLAQUE | SCHILD | TARJETA |
| | 9 | | 0339765056E | 1.00 | TARGA | RATING PLATE | PLAQUE | SCHILD | TARJETA |
| | 9 | | 0366180010F | 1.00 | TARGA LOGO SCM | RATING PLATE | PLAQUE | SCHILD | TARJETA |
| | 10 | | 0322775045G | 1.00 | TARGA | RATING PLATE | PLAQUE | SCHILD | TARJETA |
| | 10 | | 0322775046L | 1.00 | TARGA | RATING PLATE | PLAQUE | SCHILD | TARJETA |
| | 10 | | 0322775047B | 1.00 | TARGA | RATING PLATE | PLAQUE | SCHILD | TARJETA |
| | 10 | | 0339765058L | 1.00 | TARGA | RATING PLATE | PLAQUE | SCHILD | TARJETA |
| | 11 | | 0339765057G | 1.00 | TARGA | RATING PLATE | PLAQUE | SCHILD | TARJETA |
| | 11 | | 0339765072H | 1.00 | TARGA | RATING PLATE | PLAQUE | SCHILD | TARJETA |
| | 12 | | 0322775042A | 1.00 | TARGA | RATING PLATE | PLAQUE | SCHILD | TARJETA |
| | 12 | | 0322775043C | 1.00 | TARGA | RATING PLATE | PLAQUE | SCHILD | TARJETA |

227-0802

## AVVERTENZE DI SICUREZZA

1. Questa macchina è pericolosa - Attenzione!
   Solo operatori preparati possono impiegare la macchina.
2. Leggere attentamente il "MANUALE ISTRUZIONI" prima di iniziare a lavorare.
   Il "MANUALE ISTRUZIONI" è sempre fornito con la macchina e contiene informazioni ed avvertimenti di estrema importanza riguardanti l'utilizzo della medesima.
   Un uso improprio della macchina potrebbe provocare danni alle persone.
3. Non utilizzare mai la macchina senza che le protezioni di sicurezza siano al loro posto.
   Usarla solamente quando gli sportelli e le protezioni sono nella giusta posizione di protezione.
4. Prima di eseguire operazioni di lubrificazione, pulizia, registrazione, manutenzione o riparazioni, spegnere la macchina ed isolarla elettricamente.
5. Tenere lontane tutte le parti del corpo dalle parti mobili della macchina, sia quando essa è in funzione che quando si ferma.
6. Accertarsi che sulla macchina sia stato effettuato il collegamento a terra prima di utilizzarla.
7. Non mettere mai le mani o dita tra il pezzo di legno da lavorare e la cinghia di avanzamento o vicino le lame, frese o nastri abrasivi.
8. Non indossare guanti, gioielli o abiti slacciati (come maglioni, giacche, ecc.) mentre si lavora o si è vicini alla macchina in funzione.
9. Assicurarsi che tutti gli utensili rotanti siano perfettamente equilibrati, affilati ed accuratamente serrati.
   Non impiegare mai lame o utensili incrinati, deformati ed oltre il limite di velocità indicato su di essi.
10. Indossare sempre occhiali protettivi quando si lavora o si sta vicino alla macchina in funzione.
11. Non sovraccaricare la potenzialità della macchina; ricordarsi sempre di regolarla per il normale utilizzo che ne può essere fatto.
12. Non lavorare materiali che provocano scintille (come acciaio) con materiali combustibili (come polveri di alluminio e magnesio) perchè c'è il rischio che si sviluppi un incendio.
13. Tenere sempre pulito e ordinato lo spazio circostante la macchina.
    Una scarsa manutenzione potrebbe generare scivoloni, cadute ed altri danni.
14. La concentrazione è d'obbligo in ogni momento.
    La mancanza di attenzione al movimento della mano è causa di molti incidenti.
15. NON TOGLIERE MAI QUESTA TARGHETTA "AVVERTENZE DI SICUREZZA", che deve essere fissata in modo permanente sulla macchina.
    La rimozione di questa targa potrebbe causare danni a Lei e ad altri, rendendoLa responsabile.

1

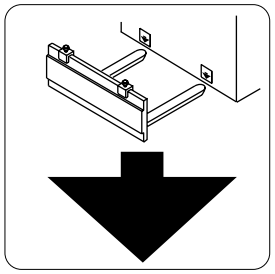

2

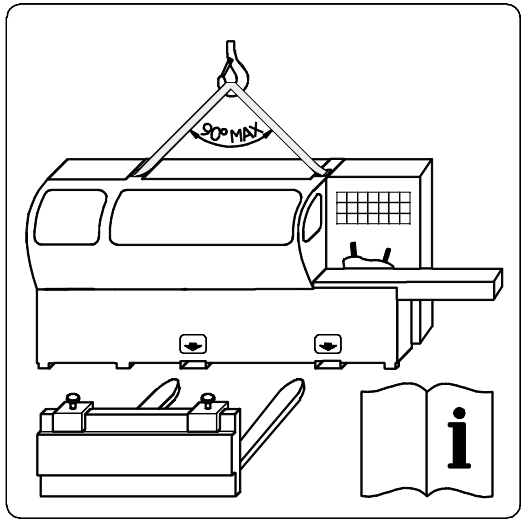


3

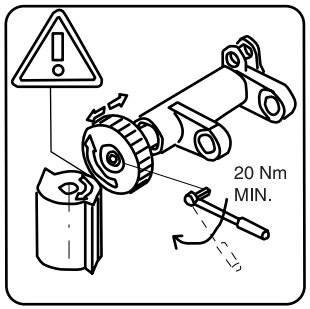


7




4

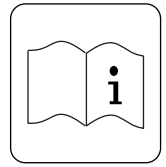

5

Superset XL

6

227-0802

## AVVERTENZE DI SICUREZZA

1. Questa macchina Ł pericolosa - Attenzione!
   Solo operatori preparati possono impiegare la macchina.
2. Leggere attentamente il "MANUALE ISTRUZIONI" prima di iniziare a lavorare.
   Il "MANUALE ISTRUZIONI" Ł sempre fornito con la macchina e contiene informazioni ed avvertimenti di estrema importanza riguardanti l'utilizzo della medesima.
   Un uso improprio della macchina potrebbe provocare danni alle persone.
3. Non utilizzare mai la macchina senza che le protezioni di sicurezza siano al loro posto.
   Usarla solamente quando gli sportelli e le protezioni sono nella giusta posizione di protezione.
4. Prima di eseguire operazioni di lubrificazione, pulizia, registrazione, manutenzione o riparazioni, spegnere la macchina ed isolarla elettricamente.
5. Tenere lontane tutte le parti del corpo dalle parti mobili della macchina, sia quando essa Ł in funzione che quando si ferma.
6. Accertarsi che sulla macchina sia stato effettuato il collegamento a terra prima di utilizzarla.
7. Non mettere mai le mani o dita tra il pezzo di legno da lavorare e la cinghia di avanzamento o vicino le lame, frese o nastri abrasivi.
8. Non indossare guanti, gioielli o abiti slacciati (come maglioni, giacche, ecc.) mentre si lavora o si Ł vicini alla macchina in funzione.
9. Assicurarsi che tutti gli utensili rotanti siano perfettamente equilibrati, affilati ed accuratamente serrati.
   Non impiegare mai lame o utensili incrinati, deformati ed oltre il limite di velocitŁ indicato su di essi.
10. Indossare sempre occhiali protettivi quando si lavora o si sta vicino alla macchina in funzione.
11. Non sovraccaricare la potenzialitŁ della macchina; ricordarsi sempre di regolarla per il normale utilizzo che ne puŁ essere fatto.
12. Non lavorare materiali che provocano scintille (come acciaio) con materiali combustibili (come polveri di alluminio e magnesio) perchŁ c'Ł il rischio che si sviluppi un incendio.
13. Tenere sempre pulito e ordinato lo spazio circostante la macchina.
    Una scarsa manutenzione potrebbe generare scivoloni, cadute ed altri danni.
14. La concentrazione Ł d'obbligo in ogni momento.
    La mancanza di attenzione al movimento della mano Ł causa di molti incidenti.
15. NON TOGLIERE MAI QUESTA TARGHETTA "AVVERTENZE DI SICUREZZA", che deve essere fissata in modo permanente sulla macchina.
    La rimozione di questa targa potrebbe causare danni a Lei e ad altri, rendendoLa responsabile.

1

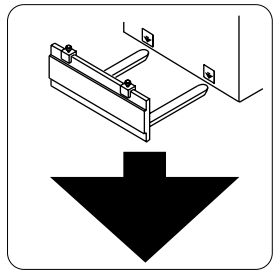

2

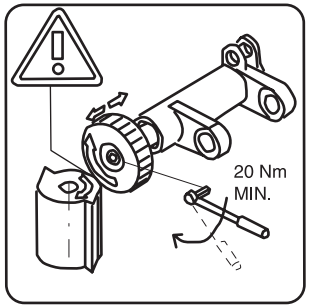


7

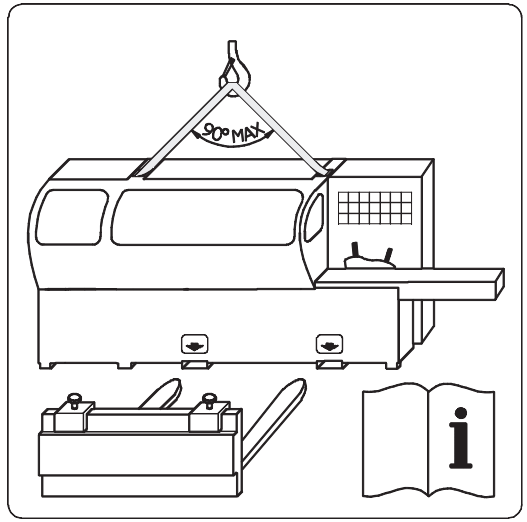


3

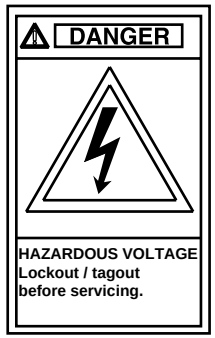


4

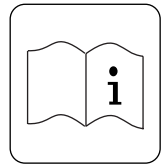

5

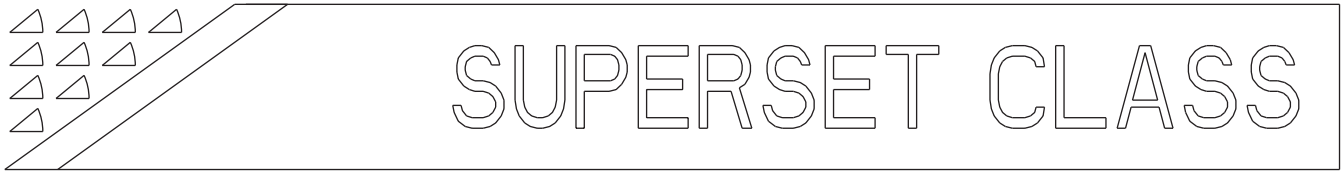


12

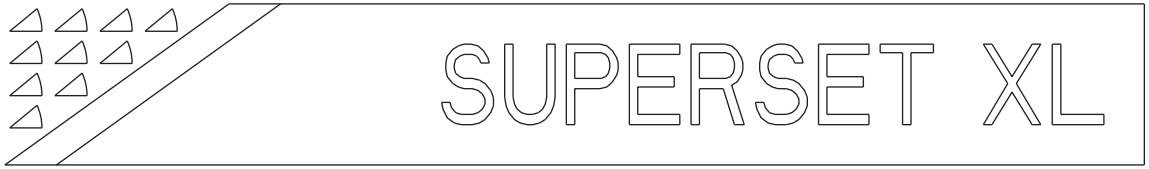


8

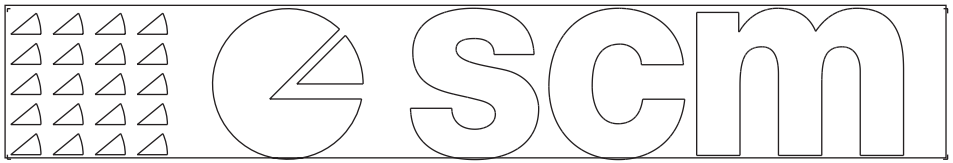


9

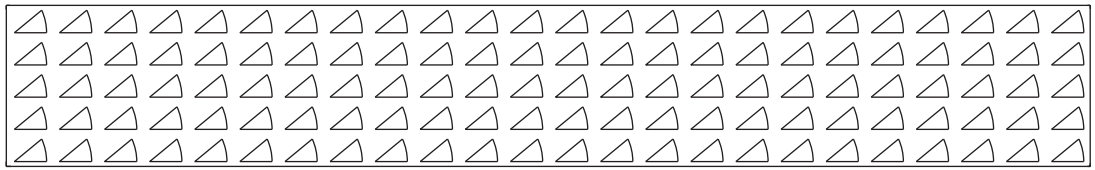

10

| | | | |
|---|---|---|---|
| scm | **SUPERSET XL** | **TARGHE - (01.01.1901 -> 31.12.1900 - p.20,06,2007)**<br>**RATING PLATES - PLAQUES**<br>**SCHILDER - TARJETA** | **227-0803-0** |

227-0802

## AVVERTENZE DI SICUREZZA

1. Questa macchina Ł pericolosa - Attenzione!
   Solo operatori preparati possono impiegare la macchina.
2. Leggere attentamente il "MANUALE ISTRUZIONI" prima di iniziare a lavorare.
   Il "MANUALE ISTRUZIONI" Ł sempre fornito con la macchina e contiene informazioni ed avvertimenti di estrema importanza riguardanti l'utilizzo della medesima.
   Un uso improprio della macchina potrebbe provocare danni alle persone.
3. Non utilizzare mai la macchina senza che le protezioni di sicurezza siano al loro posto.
   Usarla solamente quando gli sportelli e le protezioni sono nella giusta posizione di protezione.
4. Prima di eseguire operazioni di lubrificazione, pulizia, registrazione, manutenzione o riparazioni, spegnere la macchina ed isolarla elettricamente.
5. Tenere lontane tutte le parti del corpo dalle parti mobili della macchina, sia quando essa Ł in funzione che quando si ferma.
6. Accertarsi che sulla macchina sia stato effettuato il collegamento a terra prima di utilizzarla.
7. Non mettere mai le mani o dita tra il pezzo di legno da lavorare e la cinghia di avanzamento o vicino le lame, frese o nastri abrasivi.
8. Non indossare guanti, gioielli o abiti slacciati (come maglioni, giacche, ecc.) mentre si lavora o si Ł vicini alla macchina in funzione.
9. Assicurarsi che tutti gli utensili rotanti siano perfettamente equilibrati, affilati ed accuratamente serrati.
   Non impiegare mai lame o utensili incrinati, deformati ed oltre il limite di velocit indicato su di essi.
10. Indossare sempre occhiali protettivi quando si lavora o si sta vicino alla macchina in funzione.
11. Non sovraccaricare la potenzialit della macchina; ricordarsi sempre di regolarla per il normale utilizzo che ne pu essere fatto.
12. Non lavorare materiali che provocano scintille (come acciaio) con materiali combustibili (come polveri di alluminio e magnesio) perchŁ c'Ł il rischio che si sviluppi un incendio.
13. Tenere sempre pulito e ordinato lo spazio circostante la macchina.
    Una scarsa manutenzione potrebbe generare scivoloni, cadute ed altri danni.
14. La concentrazione Ł d'obbligo in ogni momento.
    La mancanza di attenzione al movimento della mano Ł causa di molti incidenti.
15. NON TOGLIERE MAI QUESTA TARGHETTA "AVVERTENZE DI SICUREZZA", che deve essere fissata in modo permanente sulla macchina.
    La rimozione di questa targa potrebbe causare danni a Lei e ad altri, rendendoLa responsabile.

1

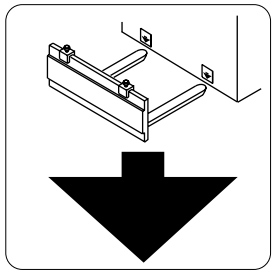

2

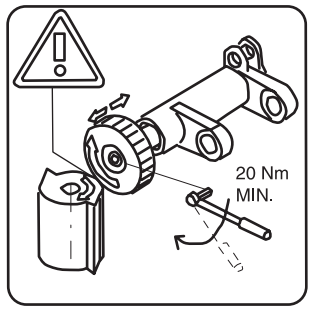


7

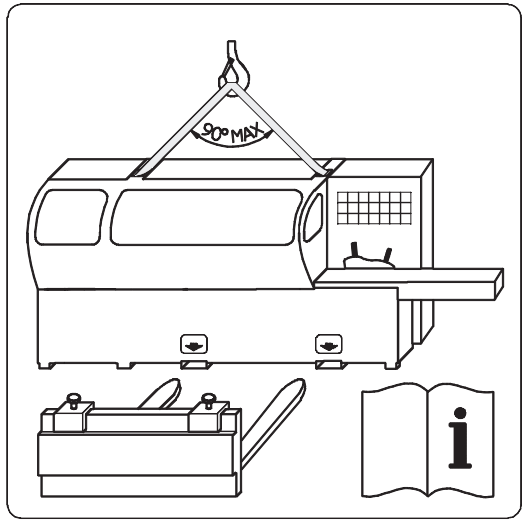


3




4

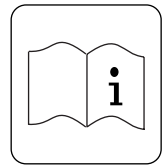

5

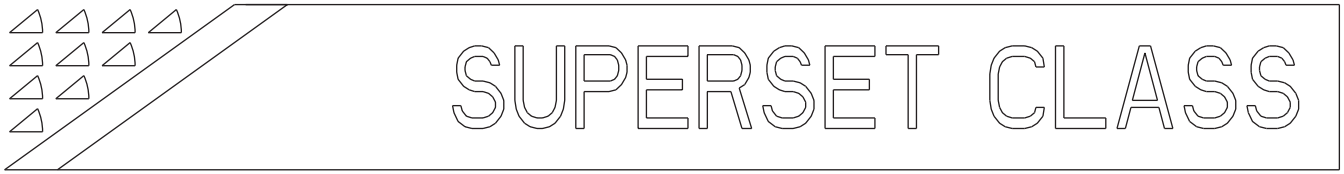


12

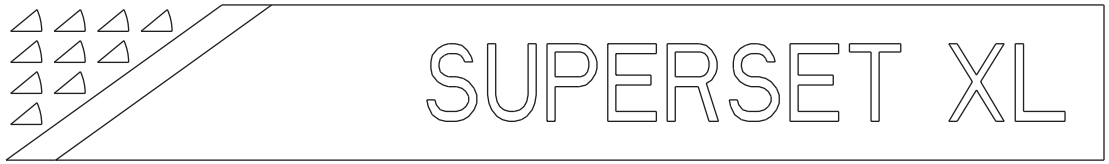


8

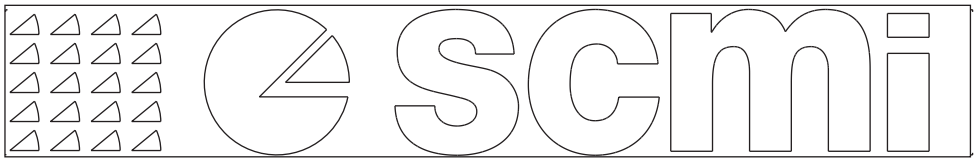


11

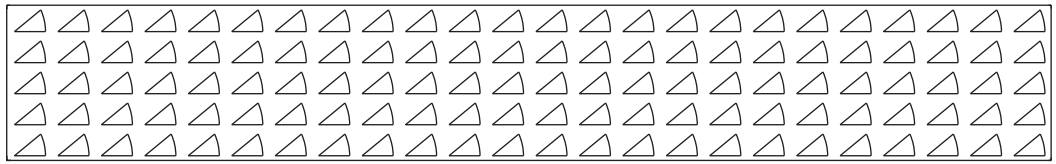

10

| | | | |
|---|---|---|---|
| scm | **SUPERSET XL** | **TARGHE - (01.01.1901 -> 31.12.1900 - p.20,06,2007)**<br>**RATING PLATES - PLAQUES**<br>**SCHILDER - TARJETA** | **227-0803-0** |

227-0802

## AVVERTENZE DI SICUREZZA

1. Questa macchina Ł pericolosa - Attenzione!
   Solo operatori preparati possono impiegare la macchina.
2. Leggere attentamente il "MANUALE ISTRUZIONI" prima di iniziare a lavorare.
   Il "MANUALE ISTRUZIONI" Ł sempre fornito con la macchina e contiene informazioni ed avvertimenti di estrema importanza riguardanti l'utilizzo della medesima.
   Un uso improprio della macchina potrebbe provocare danni alle persone.
3. Non utilizzare mai la macchina senza che le protezioni di sicurezza siano al loro posto.
   Usarla solamente quando gli sportelli e le protezioni sono nella giusta posizione di protezione.
4. Prima di eseguire operazioni di lubrificazione, pulizia, registrazione, manutenzione o riparazioni, spegnere la macchina ed isolarla elettricamente.
5. Tenere lontane tutte le parti del corpo dalle parti mobili della macchina, sia quando essa Ł in funzione che quando si ferma.
6. Accertarsi che sulla macchina sia stato effettuato il collegamento a terra prima di utilizzarla.
7. Non mettere mai le mani o dita tra il pezzo di legno da lavorare e la cinghia di avanzamento o vicino le lame, frese o nastri abrasivi.
8. Non indossare guanti, gioielli o abiti slacciati (come maglioni, giacche, ecc.) mentre si lavora o si Ł vicini alla macchina in funzione.
9. Assicurarsi che tutti gli utensili rotanti siano perfettamente equilibrati, affilati ed accuratamente serrati.
   Non impiegare mai lame o utensili incrinati, deformati ed oltre il limite di velocitŁ indicato su di essi.
10. Indossare sempre occhiali protettivi quando si lavora o si sta vicino alla macchina in funzione.
11. Non sovraccaricare la potenzialitŁ della macchina; ricordarsi sempre di regolarla per il normale utilizzo che ne puŁ essere fatto.
12. Non lavorare materiali che provocano scintille (come acciaio) con materiali combustibili (come polveri di alluminio e magnesio) perchŁ c'Ł il rischio che si sviluppi un incendio.
13. Tenere sempre pulito e ordinato lo spazio circostante la macchina.
    Una scarsa manutenzione potrebbe generare scivoloni, cadute ed altri danni.
14. La concentrazione Ł d'obbligo in ogni momento.
    La mancanza di attenzione al movimento della mano Ł causa di molti incidenti.
15. NON TOGLIERE MAI QUESTA TARGHETTA "AVVERTENZE DI SICUREZZA", che deve essere fissata in modo permanente sulla macchina.
    La rimozione di questa targa potrebbe causare danni a Lei e ad altri, rendendoLa responsabile.

1

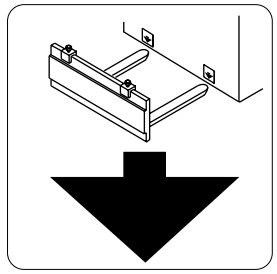

2

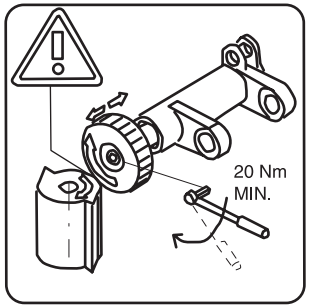


7

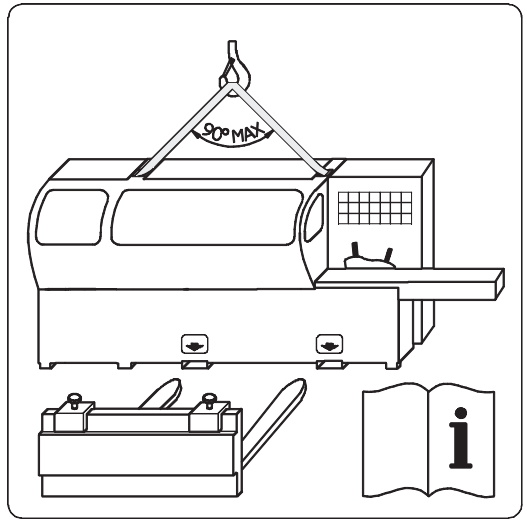


3

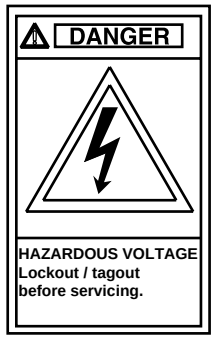


4

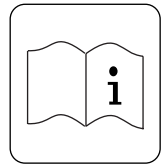

5

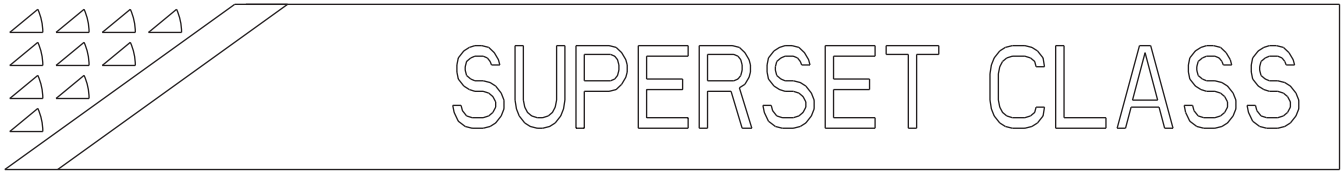


12

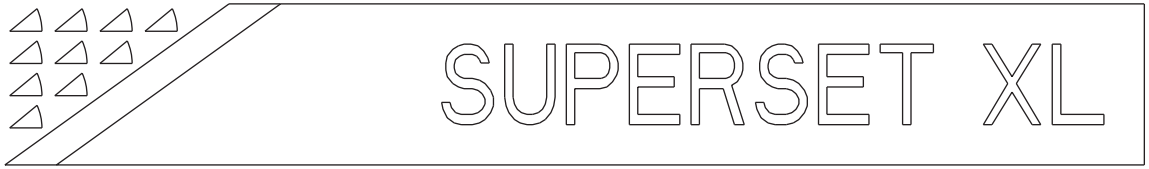


8

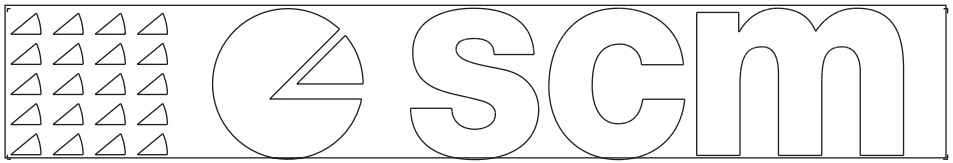


9

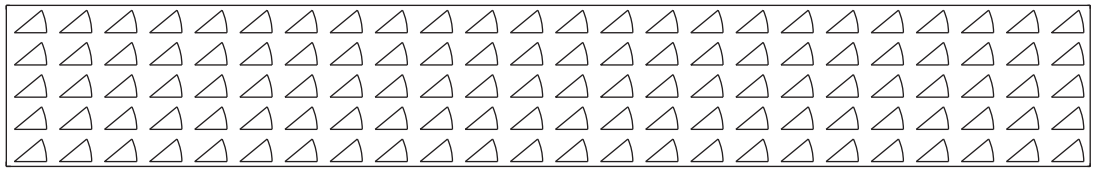

10

| | | | |
|---|---|---|---|
| scm | **SUPERSET XL** | **TARGHE - (01.01.1901 -> 31.12.1900 - p.20,06,2007)**<br>**RATING PLATES - PLAQUES**<br>**SCHILDER - TARJETA** | **227-0803-0** |

227-0802

## AVVERTENZE DI SICUREZZA

1. Questa macchina Ł pericolosa - Attenzione!
   Solo operatori preparati possono impiegare la macchina.
2. Leggere attentamente il "MANUALE ISTRUZIONI" prima di iniziare a lavorare.
   Il "MANUALE ISTRUZIONI" Ł sempre fornito con la macchina e contiene informazioni ed avvertimenti di estrema importanza riguardanti l'utilizzo della medesima.
   Un uso improprio della macchina potrebbe provocare danni alle persone.
3. Non utilizzare mai la macchina senza che le protezioni di sicurezza siano al loro posto.
   Usarla solamente quando gli sportelli e le protezioni sono nella giusta posizione di protezione.
4. Prima di eseguire operazioni di lubrificazione, pulizia, registrazione, manutenzione o riparazioni, spegnere la macchina ed isolarla elettricamente.
5. Tenere lontane tutte le parti del corpo dalle parti mobili della macchina, sia quando essa Ł in funzione che quando si ferma.
6. Accertarsi che sulla macchina sia stato effettuato il collegamento a terra prima di utilizzarla.
7. Non mettere mai le mani o dita tra il pezzo di legno da lavorare e la cinghia di avanzamento o vicino le lame, frese o nastri abrasivi.
8. Non indossare guanti, gioielli o abiti slacciati (come maglioni, giacche, ecc.) mentre si lavora o si Ł vicini alla macchina in funzione.
9. Assicurarsi che tutti gli utensili rotanti siano perfettamente equilibrati, affilati ed accuratamente serrati.
   Non impiegare mai lame o utensili incrinati, deformati ed oltre il limite di velocit indicato su di essi.
10. Indossare sempre occhiali protettivi quando si lavora o si sta vicino alla macchina in funzione.
11. Non sovraccaricare la potenzialit della macchina; ricordarsi sempre di regolarla per il normale utilizzo che ne pu essere fatto.
12. Non lavorare materiali che provocano scintille (come acciaio) con materiali combustibili (come polveri di alluminio e magnesio) perchŁ c'Ł il rischio che si sviluppi un incendio.
13. Tenere sempre pulito e ordinato lo spazio circostante la macchina.
    Una scarsa manutenzione potrebbe generare scivoloni, cadute ed altri danni.
14. La concentrazione Ł d'obbligo in ogni momento.
    La mancanza di attenzione al movimento della mano Ł causa di molti incidenti.
15. NON TOGLIERE MAI QUESTA TARGHETTA "AVVERTENZE DI SICUREZZA", che deve essere fissata in modo permanente sulla macchina.
    La rimozione di questa targa potrebbe causare danni a Lei e ad altri, rendendoLa responsabile.

1

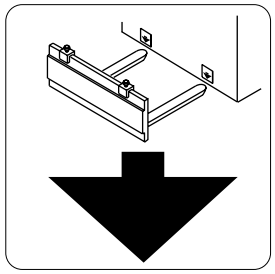

2

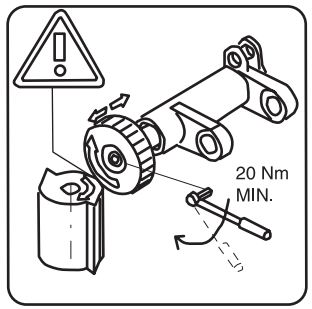


7

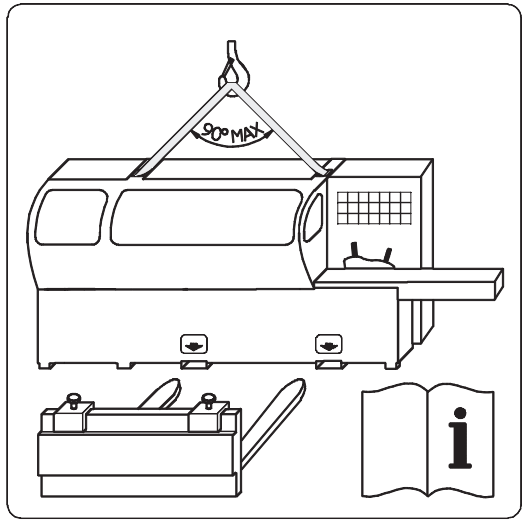


3




4

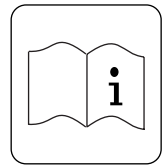

5

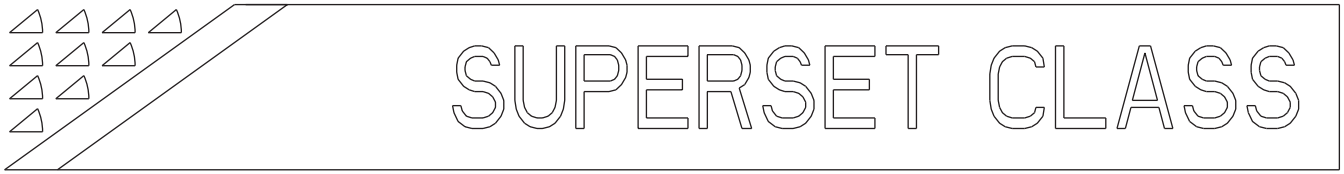


12

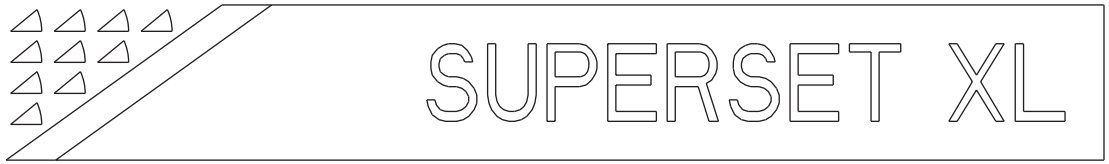


8

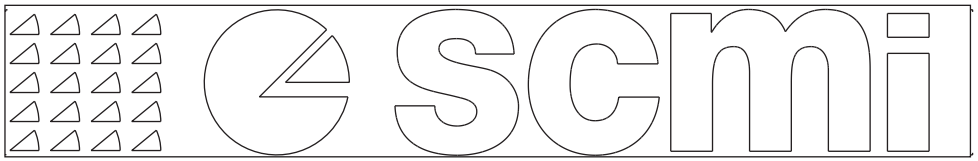


11

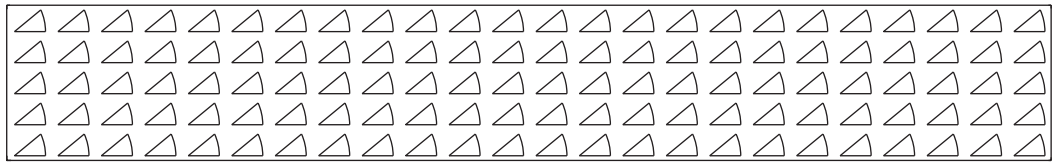

10

| | | | |
|---|---|---|---|
| scm | **SUPERSET XL** | **TARGHE - (01.01.1901 -> - p.20,06,2007)**<br>**RATING PLATES - PLAQUES**<br>**SCHILDER - TARJETA** | **227-0803-0** |

| N | P | C | CODICE | Q.TY | DENOMINAZIONE | DESCRIPTION | DESIGNATION | BEZEICHNUNG | DENOMINACION |
|---|---|---|---|---|---|---|---|---|---|
| | 01.01.1901 -> 01.01.3000 | | | | Note: 3122731500H | | | | |
| | 1 | | 0319013512L | 1.00 | POMELLO | BALL GRIP | POIGNEE | KUGELGRIFF | POMO |
| | 2 | | 0310830314L | 1.00 | BOCCOLA | BUSHING | DOUILLE | BUCHSE | CASQUILLO |
| | 3 | | 2711135400C | 1.00 | BLOCCAGGIO | LOCKING DEVICE | BLOCAGE | SPERRE | BLOQUEO |
| | 3 | | 2711135410D | 1.00 | BLOCCAGGIO | LOCKING DEVICE | BLOCAGE | SPERRE | BLOQUEO |

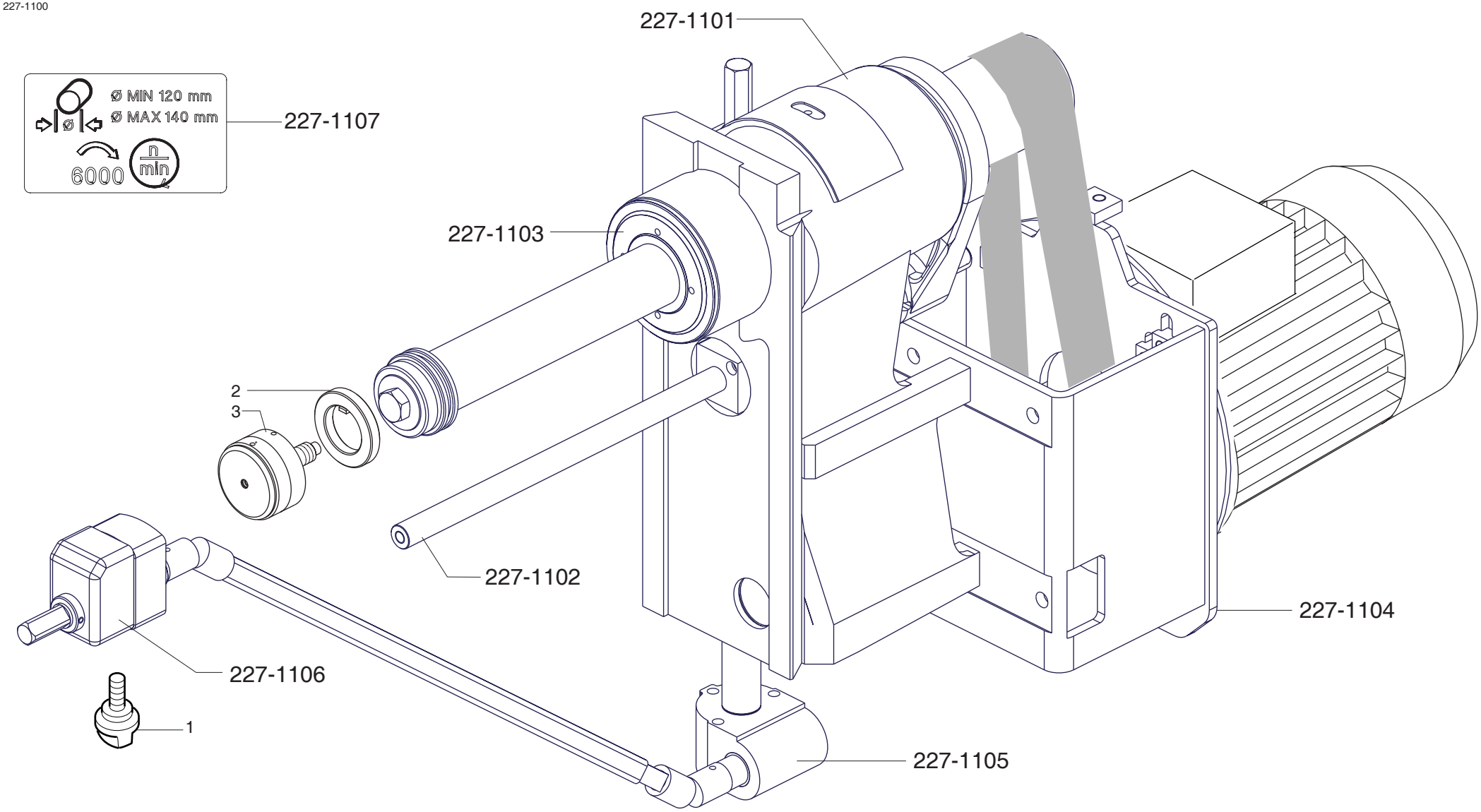
227-1101
Ø MIN 120 mm
Ø MAX 140 mm
227-1107
6000 n/min
227-1103
2
3
227-1102
227-1104
227-1106
1
227-1105

| N | P | C | CODICE | Q.TY | DENOMINAZIONE | DESCRIPTION | DESIGNATION | BEZEICHNUNG | DENOMINACION |
|---|---|---|---|---|---|---|---|---|---|
| | 01.01.1901 -> 01.01.3000 | | | | Note: 2822731660B | | | | |
| | 1 | | 0319433851G | 1.00 | VITE BLOCCAGGIO | SCREW | VIS | SCHRAUBE | TORNILLO |
| | 2 | | 0319433800L | 1.00 | SLITTA | SLIDE | COULISSE | SCHLITTEN | CORREDERA |
| | 3 | | 0319441002F | 1.00 | MADREVITE | NUT SCREW | VIS-MERE | MUTTERGEWINDE | TUERCA |
| | 4 | | 0521930031G | 1.00 | CARTER | COVER | CARTER | DECKEL | CARTER |

227-1101

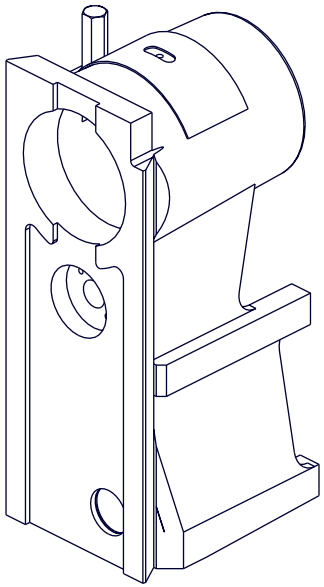

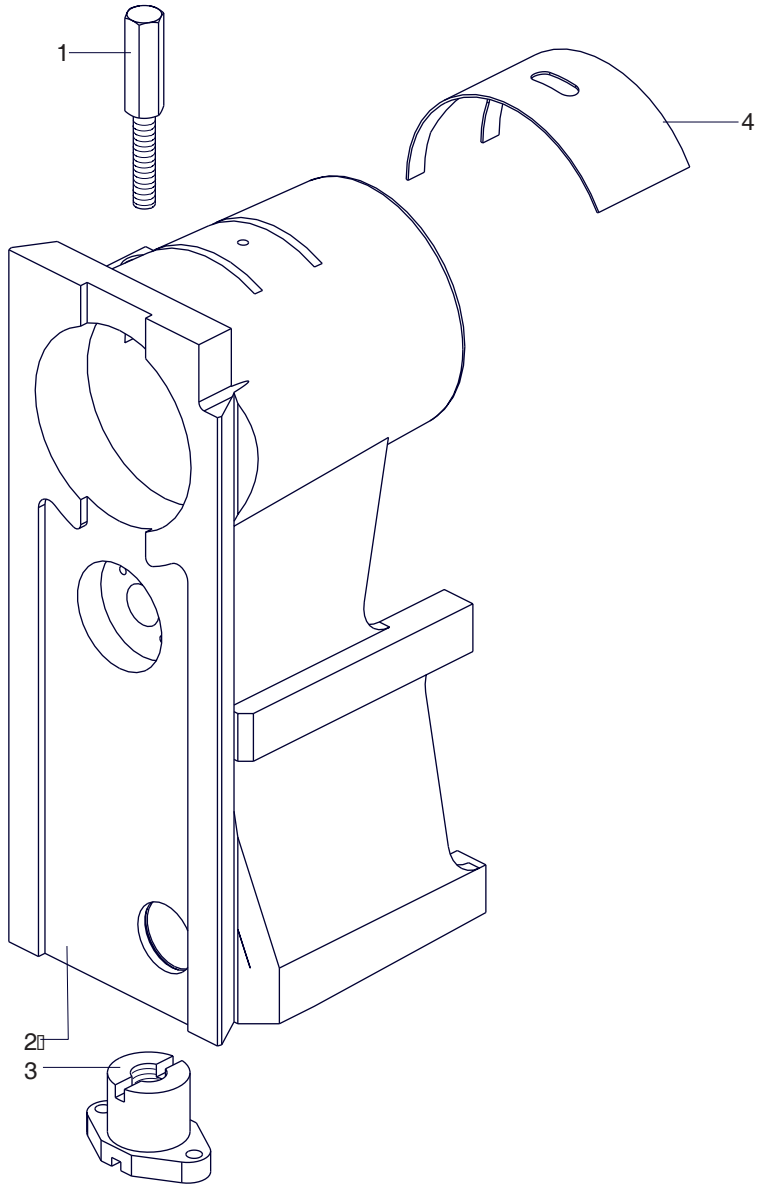


| | | | |
|---|---|---|---|
| scm | SUPERSET XL | SLITTA - (01.01.1901 -> - p.20,06,2007)<br>SLIDE - GLISSIERE<br>SCHLITTEN - TRINEO | 227-1101-0 |

| N | P | C | CODICE | Q.TY | DENOMINAZIONE | DESCRIPTION | DESIGNATION | BEZEICHNUNG | DENOMINACION |
|---|---|---|---|---|---|---|---|---|---|
| | 01.01.1901 -> 01.01.3000 | | | | Note: 2822731730A | | | | |
| | 1 | | 1416330018C | 1.00 | FLANGIA | FLANGE | FLASQUE | FLANSCH | ANILLO |
| | 2 | | 0000613045G | 4.00 | RALLA | WASHER | CRAPAUDINE | SCHEIBE | RANGUA |
| | 3 | | 0000613041H | 2.00 | GABBIA A RULLINI | ROLLER CAGE | CAGE A ROULEAUX | WALZENKAEFIG | COJINETE |
| | 4 | | 0316330020C | 1.00 | RONDELLA | WASHER | RONDELLE | SCHEIBE | ARANDELA |
| | 5 | | 0322730305E | 1.00 | VITE | SCREW | VIS | SCHRAUBE | TORNILLO |
| | 6 | | 0300928001B | 1.00 | BOCCOLA | BUSHING | DOUILLE | BUCHSE | CASQUILLO |

227-1102

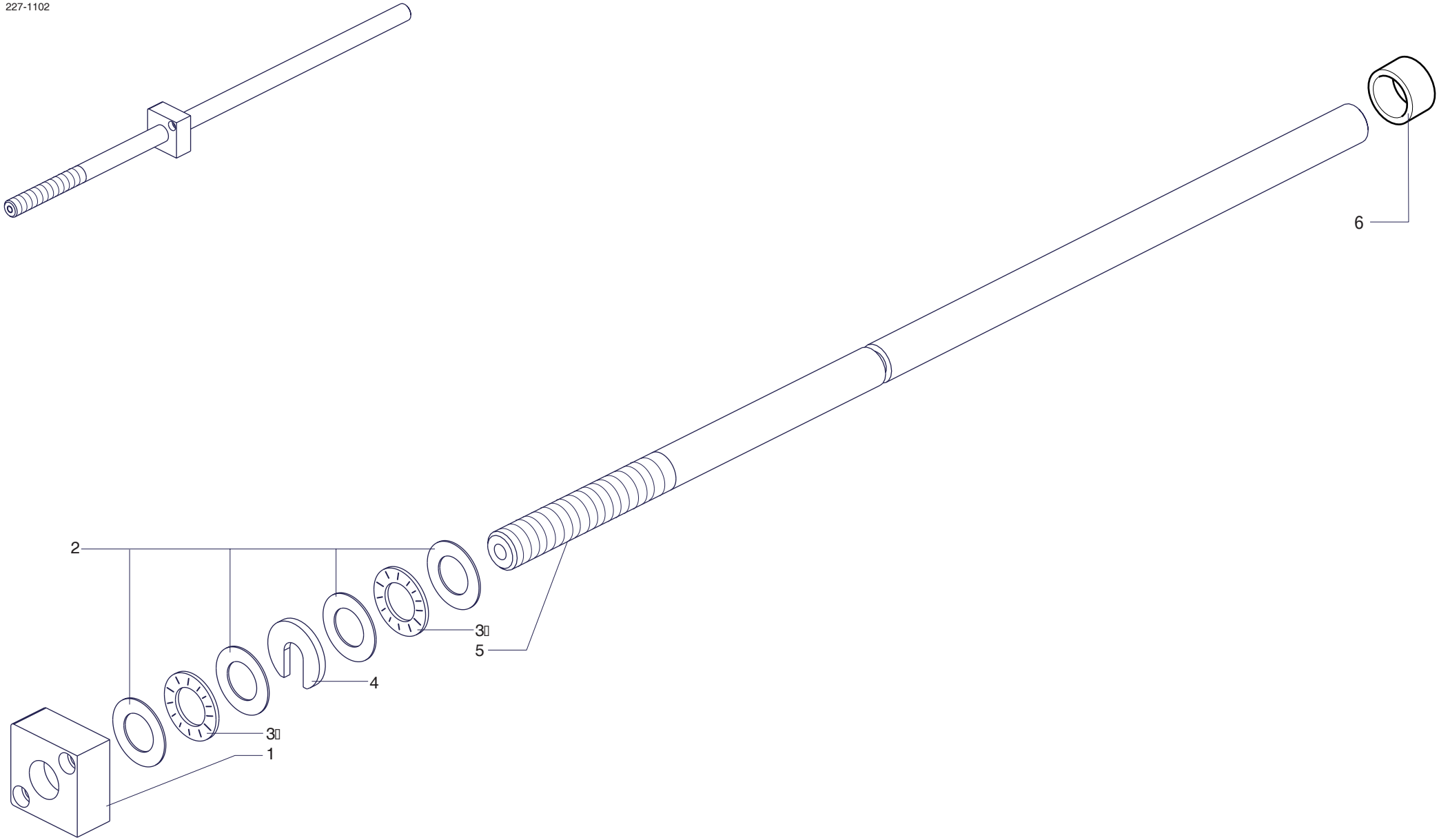


| | | | |
|---|---|---|---|
| scm | SUPERSET XL | POSIZIONAMENTO ORIZZONTALE MANUALE - (01.01.1901 -> - p.20,06,2007)<br>MANUAL HORIZONTAL ADJUSTMENT - REGLAGE HORIZONTAL MANUEL<br>MANUELLE HORIZONTALVERSTELLUNG - UBICACION HORIZONTAL MANUAL | 227-1102-0 |

| N | P | C | CODICE | Q.TY | DENOMINAZIONE | DESCRIPTION | DESIGNATION | BEZEICHNUNG | DENOMINACION |
|---|---|---|---|---|---|---|---|---|---|
| | 01.01.1901 -> 01.01.3000 | | | | Note: 2822731630H | | | | |
| | 1 | | 0000308566C | 1.00 | VITE | SCREW | VIS | SCHRAUBE | TORNILLO |
| | 2 | | 0327430300B | 1.00 | RONDELLA | WASHER | RONDELLE | SCHEIBE | ARANDELA |
| | 3 | | 0316036400C | 1.00 | ANELLO CON DENTATURA D=40 | RING | BAGUE | RING | ANILLO |
| | 3 | | 0516036600B | 1.00 | ANELLO CON DENTATURA D=35 | RING | BAGUE | RING | ANILLO |
| | 3 | | 2739030101B | 1.00 | ANELLO CON DENTATURA | RING | BAGUE | RING | ANILLO |
| | 4 | | 0319433349C | 1.00 | GHIERA | RING NUT | EMBOUT | NUTMUTTER | COLLAR |
| | 4 | | 0319433350D | 1.00 | GHIERA | RING NUT | EMBOUT | NUTMUTTER | COLLAR |
| | 5 | | 0319433348A | 1.00 | ANELLO | RING | BAGUE | RING | ANILLO |
| | 6 | | 0000606139H | 1.00 | CUSCINETTO | BEARING | ROULEMENT | LAGER | COJINETE |
| | 6 | | 0000606170C | 2.00 | CUSCINETTO | BEARING | ROULEMENT | LAGER | COJINETE |
| | 6 | | 0000609068A | 1.00 | CUSCINETTO | BEARING | ROULEMENT | LAGER | COJINETE |
| | 6 | | 0766547299B | 2.00 | CUSCINETTO | BEARING | ROULEMENT | LAGER | COJINETE |
| | 7 | | 0319435704H | 1.00 | ALBERO TOUPIE | SPINDLE | ARBRE | FRAESSPINDEL | EJE |
| | 7 | | 0319435710A | 1.00 | ALBERO TOUPIE | SPINDLE | ARBRE | FRAESSPINDEL | EJE |
| | 7 | | 0319435713G | 1.00 | ALBERO TOUPIE | SPINDLE | ARBRE | FRAESSPINDEL | EJE |
| | 7 | | 0319435714L | 1.00 | ALBERO TOUPIE | SPINDLE | ARBRE | FRAESSPINDEL | EJE |
| | 7 | | 0319435715B | 1.00 | ALBERO TOUPIE | SPINDLE | ARBRE | FRAESSPINDEL | EJE |
| | 7 | | 0319435716D | 1.00 | ALBERO TOUPIE | SPINDLE | ARBRE | FRAESSPINDEL | EJE |
| | 7 | | 0319435782C | 1.00 | ALBERO TOUPIE | SPINDLE | ARBRE | FRAESSPINDEL | EJE |
| | 7 | | 0322712000E | 1.00 | ALBERO TOUPIE | SPINDLE | ARBRE | FRAESSPINDEL | EJE |
| | 7 | | 0322712001G | 1.00 | ALBERO TOUPIE | SPINDLE | ARBRE | FRAESSPINDEL | EJE |
| | 7 | | 0322712002L | 1.00 | ALBERO TOUPIE | SPINDLE | ARBRE | FRAESSPINDEL | EJE |
| | 7 | | 0322730026C | 1.00 | ALBERO TOUPIE D=35 | SPINDLE | ARBRE | FRAESSPINDEL | EJE |
| | 8 | | 0319433371H | 1.00 | CILINDRO | CYLINDER | CYLINDRE | ZYLINDER | CILINDRO |
| | 8 | | 0319433373C | 1.00 | CILINDRO | CYLINDER | CYLINDRE | ZYLINDER | CILINDRO |
| | 8 | | 0319433375G | 1.00 | CILINDRO | CYLINDER | CYLINDRE | ZYLINDER | CILINDRO |
| | 8 | | 0322711000D | 1.00 | CILINDRO | CYLINDER | CYLINDRE | ZYLINDER | CILINDRO |
| | 8 | | 0322711002H | 1.00 | CILINDRO | CYLINDER | CYLINDRE | ZYLINDER | CILINDRO |
| | 9 | | 0000645169L | 1.00 | LINGUETTA | FEATHER KEY | LANGUETTE | FEDERKEIL | LINGUETA |
| | 10 | | 0000617759G | 6.00 | MOLLA TAZZA | SPRING | RESSORT | TELLERFEDER | RESORTE |
| | 11 | | 0319435570C | 1.00 | DISTANZIALE | SPACER | ENTRETOISE | DISTANZSTUECK | DISTANCIADOR |
| | 12 | | 0000606165C | 1.00 | CUSCINETTO | BEARING | ROULEMENT | LAGER | COJINETE |
| | 12 | | 0000608161F | 1.00 | CUSC.ALTA P. | HIGH PRECISION BEARING | ROULEMENT HAUTE PRECISION | HOCHPRAEZISIONSLAGER | COJ.ALTA PREC. |
| | 12 | | 0766547297G | 1.00 | CUSCINETTO (COPPIA) | BEARING | ROULEMENT | LAGER | COJINETE |
| | 12 | | 0766547298L | 1.00 | CUSCINETTO | BEARING | ROULEMENT | LAGER | COJINETE |
| | 13 | | 0319431141H | 1.00 | PULEGGIA CONDOTTA | PULLEY | POULIE | RIEMENSCHEIBE | POLEA |
| | 13 | | 0321930803B | 1.00 | PULEGGIA | PULLEY | POULIE | RIEMENSCHEIBE | POLEA |
| | 14 | | 0311130200B | 1.00 | MADREVITE | NUT SCREW | VIS-MERE | MUTTERGEWINDE | TUERCA |
| | 14 | | 0322730302H | 1.00 | MADREVITE | NUT SCREW | VIS-MERE | MUTTERGEWINDE | TUERCA |

| N | P | C | CODICE | Q.TY | DENOMINAZIONE | DESCRIPTION | DESIGNATION | BEZEICHNUNG | DENOMINACION |
|---|---|---|---|---|---|---|---|---|---|
| | 15 | | 0319431142A | 1.00 | RONDELLA | WASHER | RONDELLE | SCHEIBE | ARANDELA |
| | 16 | | 0000308440E | 1.00 | VITE | SCREW | VIS | SCHRAUBE | TORNILLO |
| | 17 | | 0322730310E | 1.00 | BLOCCAGGIO | LOCKING DEVICE | BLOCAGE | SPERRE | BLOQUEO |
| | 17 | | 0322730311G | 1.00 | BLOCCAGGIO | LOCKING DEVICE | BLOCAGE | SPERRE | BLOQUEO |
| | 18 | | 0319433356G | 1.00 | ANELLO | RING | BAGUE | RING | ANILLO |
| | 19 | | 0310130421H | 1.00 | GUARNIZIONE | GASKET | GARNITURE | DICHTUNG | JUNTA |
| | 20 | | 0310130420F | 1.00 | PARAPOLVERE | DUST COVER | PARE-POUSSIERE | STAUBDECKEL | PLACA RETENCION POLVO |
| | 21 | | 0519433357D | 2.00 | INGRASSATORE (NIPPLO) | GREASE NIPPLE | NIPPLE | SCHMIERNIPPEL | NIPLE ENGRASADOR |

227-1103

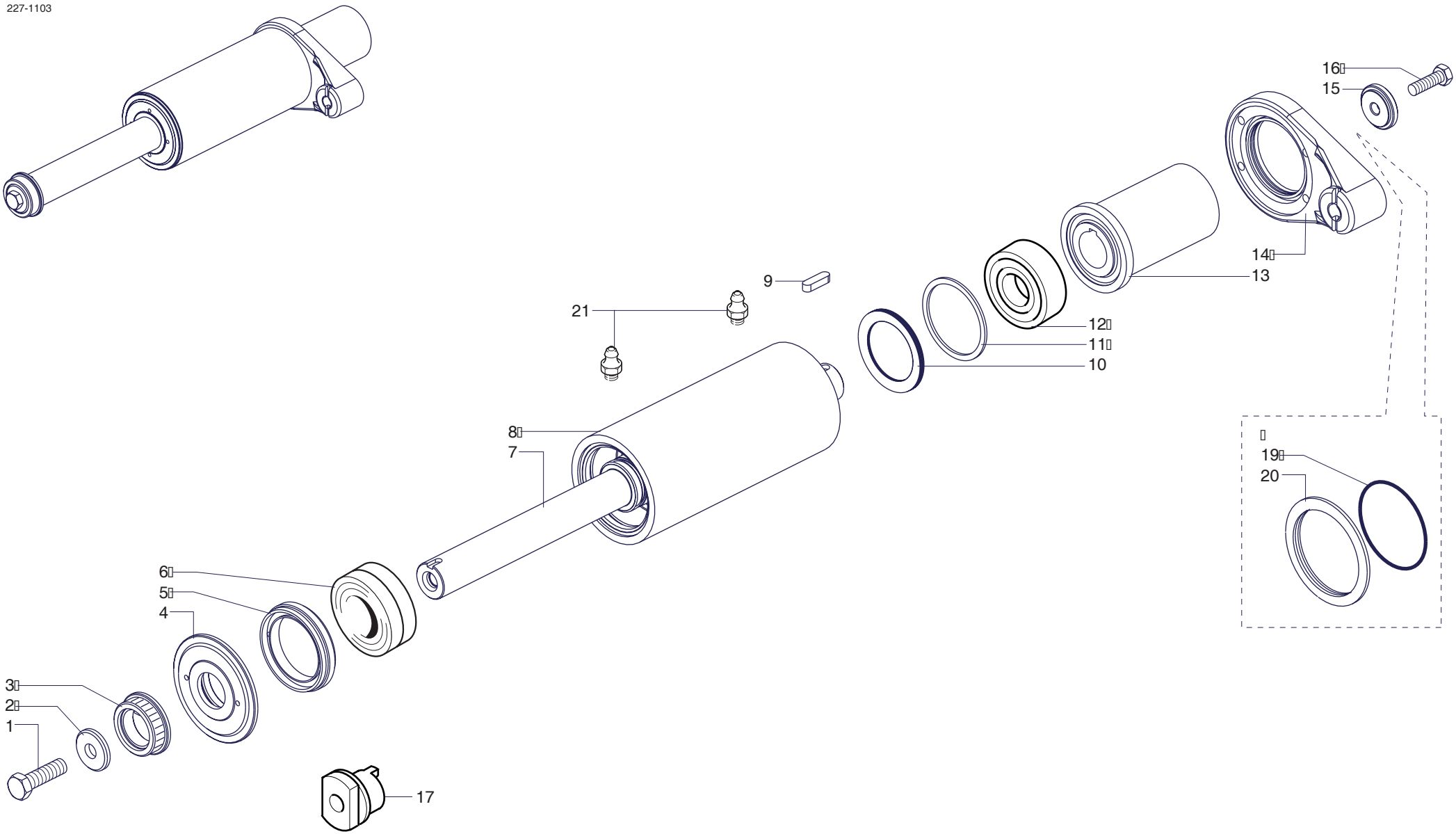


| scm | SUPERSET XL | ALBERO PIALLA - (01.01.1901 ->  - p.20,06,2007)<br>CUTTERBLOCK - ARBRE PORTE-COUTEAUX<br>MESSERWELLE - EJE CEPILLO | 227-1103-0 |
|---|---|---|---|

| N | P | C | CODICE | Q.TY | DENOMINAZIONE | DESCRIPTION | DESIGNATION | BEZEICHNUNG | DENOMINACION |
|---|---|---|---|---|---|---|---|---|---|
| 01.01.1901 -> 01.01.3000 | | | | | Note: 2822731530F | | | | |
| 1 | | | 0001320284B | 1.00 | MOTORE TRIF. | 3-PH. MOTOR | 3-PH. MOTEUR | 3-PH. MOTOR | MOT.TRIFAS. |
| 1 | | | 0001321019B | 1.00 | MOTORE TRIF. | 3.PH MOTOR | 3 PH. MOTEUR | 3-PH MOTOR | MOT. TRIFAS |
| 1 | | | 0001321024B | 1.00 | MOTORE TRIF. | 3-PH. MOTOR | 3-PH. MOTEUR | 3-PH. MOTOR | MOT.TRIFAS. |
| 1 | | | 0001321029C | 1.00 | MOTORE TRIF. | 3.PH MOTOR | 3 PH. MOTEUR | 3-PH MOTOR | MOT. TRIFAS |
| 1 | | | 0001321045F | 1.00 | MOTORE TRIF. | 3.PH MOTOR | 3 PH. MOTEUR | 3-PH MOTOR | MOT. TRIFAS |
| 1 | | | 0001321046H | 1.00 | MOTORE TRIF. | 3-PH. MOTOR | 3-PH. MOTEUR | 3-PH. MOTOR | MOT.TRIFAS. |
| 1 | | | 0001321047A | 1.00 | MOTORE TRIF. | 3.PH MOTOR | 3 PH. MOTEUR | 3-PH MOTOR | MOT. TRIFAS |
| 1 | | | 0001321059F | 1.00 | MOTORE TRIF. | 3.PH MOTOR | 3 PH. MOTEUR | 3-PH MOTOR | MOT. TRIFAS |
| 1 | | | 0001321067C | 1.00 | MOTORE TRIF. | 3-PH. MOTOR | 3-PH. MOTEUR | 3-PH. MOTOR | MOT.TRIFAS. |
| 1 | | | 0001321071A | 1.00 | MOTORE TRIF. | 3.PH MOTOR | 3 PH. MOTEUR | 3-PH MOTOR | MOT. TRIFAS |
| 1 | | | 0001321080L | 1.00 | MOTORE TRIF. | 3.PH MOTOR | 3 PH. MOTEUR | 3-PH MOTOR | MOT. TRIFAS |
| 1 | | | 0001321126H | 1.00 | MOTORE TRIF. | 3.PH MOTOR | 3 PH. MOTEUR | 3-PH MOTOR | MOT. TRIFAS |
| 1 | | | 0001321127A | 1.00 | MOTORE TRIF. | 3.PH MOTOR | 3 PH. MOTEUR | 3-PH MOTOR | MOT. TRIFAS |
| 1 | | | 0001321141L | 1.00 | MOTORE TRIF. | 3.PH MOTOR | 3 PH. MOTEUR | 3-PH MOTOR | MOT. TRIFAS |
| 1 | | | 0001321142B | 1.00 | MOTORE TRIF. | 3.PH MOTOR | 3 PH. MOTEUR | 3-PH MOTOR | MOT. TRIFAS |
| 1 | | | 0001321143D | 1.00 | MOTORE TRIF. | 3.PH MOTOR | 3 PH. MOTEUR | 3-PH MOTOR | MOT. TRIFAS |
| 1 | | | 0001321167E | 1.00 | MOTORE TRIF. | 3.PH. MOTOR | 3 PH. MOTEUR | 3-DREIPHASENMOTOR | MOT. TRIFAS |
| 1 | | | 0001331011F | 1.00 | MOTORE TRIF. FRENO C.C. | 3-PH. MOTOR D.C. BRAKE | MOTEUR 3-PH . FREIN C.C | 3-PH. MOTOR G.S. BREMSE | MOT. TRIFAS. FR. C.C. |
| 1 | | | 0001331012H | 1.00 | MOTORE TRIF. FRENO C.C. | 3-PH. MOTOR D.C. BRAKE | 3-PH. MOTEUR FREIN C.C. | 3-PH. MOTOR G.S. BREMSE | MOT.TRIFAS.FR.C.C. |
| 1 | | | 0001331013A | 1.00 | MOTORE TRIF. FRENO C.C. | 3-PH. MOTOR D.C. BRAKE | MOTEUR 3-PH . FREIN C.C | 3-PH. MOTOR G.S. BREMSE | MOT. TRIFAS. FR. C.C. |
| 1 | | | 0001331014C | 1.00 | MOTORE TRIF. FRENO C.C. | 3-PH. MOTOR D.C. BRAKE | MOTEUR 3-PH . FREIN C.C | 3-PH. MOTOR G.S. BREMSE | MOT. TRIFAS. FR. C.C. |
| 1 | | | 0001331058F | 1.00 | MOTORE TRIF. FRENO C.C. | 3-PH. MOTOR C.C. BRAKE | 3-PH. MOTEUR FREIN C.C. | 3-PH. MOTOR C.C. BREMSE | MOT.TRIFAS.FR.C.C. |
| 1 | | | 0001331063F | 1.00 | MOTORE TRIF. FRENO C.C. | 3-PH. MOTOR D.C. BRAKE | MOTEUR 3-PH . FREIN C.C | 3-PH. MOTOR G.S. BREMSE | MOT. TRIFAS. FR. C.C. |
| 1 | | | 0001331065A | 1.00 | MOTORE TRIF. FRENO C.C. | 3-PH. MOTOR D.C. BRAKE | MOTEUR 3-PH . FREIN C.C | 3-PH. MOTOR G.S. BREMSE | MOT. TRIFAS. FR. C.C. |
| 1 | | | 0001331066C | 1.00 | MOTORE TRIF. FRENO C.C. | 3-PH. MOTOR D.C. BRAKE | MOTEUR 3-PH . FREIN C.C | 3-PH. MOTOR G.S. BREMSE | MOT. TRIFAS. FR. C.C. |
| 1 | | | 0001331067E | 1.00 | MOTORE TRIF. FRENO C.C. | 3-PH. MOTOR D.C. BRAKE | MOTEUR 3-PH . FREIN C.C | 3-PH. MOTOR G.S. BREMSE | MOT. TRIFAS. FR. C.C. |
| 1 | | | 0001331080B | 1.00 | MOTORE TRIF. FRENO C.C. | 3-PH. MOTOR D.C. BRAKE | MOTEUR 3-PH . FREIN C.C | 3-PH. MOTOR G.S. BREMSE | MOT. TRIFAS. FR. C.C. |
| 1 | | | 0001331108C | 1.00 | MOTORE TRIF. FRENO C.C. | 3-PH. MOTOR C.C. BRAKE | 3-PH. MOTEUR FREIN C.C. | 3-PH. MOTOR C.C. BREMSE | MOT.TRIFAS.FR.C.C. |
| 1 | | | 0001331119F | 1.00 | MOTORE TRIF. FRENO C.C. | 3-PH. MOTOR D.C. BRAKE | MOTEUR 3-PH . FREIN C.C | 3-PH. MOTOR G.S. BREMSE | MOT. TRIFAS. FR. C.C. |
| 1 | | | 0001331120G | 1.00 | MOTORE TRIF. FRENO C.C. | 3-PH. MOTOR D.C. BRAKE | MOTEUR 3-PH . FREIN C.C | 3-PH. MOTOR G.S. BREMSE | MOT. TRIFAS. FR. C.C. |
| 1 | | | 0001331121L | 1.00 | MOTORE TRIF. FRENO C.C. | 3-PH. MOTOR D.C. BRAKE | MOTEUR 3-PH . FREIN C.C | 3-PH. MOTOR G.S. BREMSE | MOT. TRIFAS. FR. C.C. |
| 1 | | | 0001331208E | 1.00 | MOTORE TRIF. FRENO C.C. | 3-PH. MOTOR D.C. BRAKE | MOTEUR 3-PH . FREIN C.C | 3-PH. MOTOR G.S. BREMSE | MOT. TRIFAS. FR. C.C. |
| 1 | | | 0001331610G | 1.00 | MOTORE TRIF. FRENO C.C. | 3-PH. MOTOR D.C. BRAKE | MOTEUR 3-PH . FREIN C.C | 3-PH. MOTOR G.S. BREMSE | MOT. TRIFAS. FR. C.C. |
| 1 | | | 0001331664B | 1.00 | MOTORE TRIF. FRENO C.C. | 3-PH. MOTOR D.C. BRAKE | MOTEUR 3-PH . FREIN C.C | 3-PH. MOTOR G.S. BREMSE | MOT. TRIFAS. FR. C.C. |
| 1 | | | 0001331665D | 1.00 | MOTORE TRIF. FRENO C.C. | 3-PH. MOTOR D.C. BRAKE | MOTEUR 3-PH . FREIN C.C | 3-PH. MOTOR G.S. BREMSE | MOT. TRIFAS. FR. C.C. |
| 1 | | | 0001331666F | 1.00 | MOTORE TRIF. FRENO C.C. | 3-PH. MOTOR D.C. BRAKE | MOTEUR 3-PH . FREIN C.C | 3-PH. MOTOR G.S. BREMSE | MOT. TRIFAS. FR. C.C. |
| 1 | | | 0001331768C | 1.00 | MOTORE TRIF. | 3-PH. MOTOR | 3-PH. MOTEUR | 3-PH. MOTOR | MOT.TRIFAS. |
| 1 | | | 0001336015A | 1.00 | MOTORE TRIF. | 3.PH MOTOR | 3 PH. MOTEUR | 3-PH MOTOR | MOT. TRIFAS |
| 1 | | | 0001336018G | 1.00 | MOTORE TRIF. | 3.PH MOTOR | 3 PH. MOTEUR | 3-PH MOTOR | MOT. TRIFAS |

| N | P | C | CODICE | Q.TY | DENOMINAZIONE | DESCRIPTION | DESIGNATION | BEZEICHNUNG | DENOMINACION |
|---|---|---|---|---|---|---|---|---|---|
| | 1 | | 0001336054C | 1.00 | MOTORE TRIF. | 3.PH MOTOR | 3 PH. MOTEUR | 3-PH MOTOR | MOT. TRIFAS |
| | 1 | | 0001337679A | 1.00 | MOTORE TRIF. | 3.PH MOTOR | 3 PH. MOTEUR | 3-PH MOTOR | MOT. TRIFAS |
| | 1 | | 0001337680B | 1.00 | MOTORE TRIF. | 3.PH MOTOR | 3 PH. MOTEUR | 3-PH MOTOR | MOT. TRIFAS |
| | 1 | | 0001337715G | 1.00 | MOTORE TRIF. | 3.PH MOTOR | 3 PH. MOTEUR | 3-PH MOTOR | MOT. TRIFAS |
| | 1 | | 0001337716L | 1.00 | MOTORE TRIF. | 3.PH MOTOR | 3 PH. MOTEUR | 3-PH MOTOR | MOT. TRIFAS |
| | 1 | | 0001337717B | 1.00 | MOTORE TRIF. | 3.PH MOTOR | 3 PH. MOTEUR | 3-PH MOTOR | MOT. TRIFAS |
| | 1 | | 0001337718D | 1.00 | MOTORE TRIF. | 3.PH MOTOR | 3 PH. MOTEUR | 3-PH MOTOR | MOT. TRIFAS |
| | 1 | | 0001337719F | 1.00 | MOTORE TRIF. | 3.PH MOTOR | 3 PH. MOTEUR | 3-PH MOTOR | MOT. TRIFAS |
| | 1 | | 0001337720G | 1.00 | MOTORE TRIF. | 3.PH MOTOR | 3 PH. MOTEUR | 3-PH MOTOR | MOT. TRIFAS |
| | 1 | | 0001337746C | 1.00 | MOTORE TRIF. FRENO C.C. | 3-PH. MOTOR D.C. BRAKE | MOTEUR 3-PH . FREIN C.C | 3-PH. MOTOR G.S. BREMSE | MOT. TRIFAS. FR. C.C. |
| | 1 | | 0001337747E | 1.00 | MOTORE TRIF. FRENO C.C. | 3-PH. MOTOR D.C. BRAKE | MOTEUR 3-PH . FREIN C.C | 3-PH. MOTOR G.S. BREMSE | MOT. TRIFAS. FR. C.C. |
| | 1 | | 0001337748G | 1.00 | MOTORE TRIF. FRENO C.C. | 3-PH. MOTOR D.C. BRAKE | MOTEUR 3-PH . FREIN C.C | 3-PH. MOTOR G.S. BREMSE | MOT. TRIFAS. FR. C.C. |
| | 1 | | 0001337749L | 1.00 | MOTORE TRIF. FRENO C.C. | 3-PH. MOTOR D.C. BRAKE | MOTEUR 3-PH . FREIN C.C | 3-PH. MOTOR G.S. BREMSE | MOT. TRIFAS. FR. C.C. |
| | 1 | | 0001337753G | 1.00 | MOTORE TRIF. FRENO C.C. | 3-PH. MOTOR D.C. BRAKE | MOTEUR 3-PH . FREIN C.C | 3-PH. MOTOR G.S. BREMSE | MOT. TRIFAS. FR. C.C. |
| | 1 | | 0001337754L | 1.00 | MOTORE TRIF. FRENO C.C. | 3-PH. MOTOR D.C. BRAKE | MOTEUR 3-PH . FREIN C.C | 3-PH. MOTOR G.S. BREMSE | MOT. TRIFAS. FR. C.C. |
| | 1 | | 0001337754L | 1.00 | MOTORE TRIF. FRENO C.C. | 3-PH. MOTOR D.C. BRAKE | MOTEUR 3-PH . FREIN C.C | 3-PH. MOTOR G.S. BREMSE | MOT. TRIFAS. FR. C.C. |
| | 1 | | 0001337755B | 1.00 | MOTORE TRIF. FRENO C.C. | 3-PH. MOTOR D.C. BRAKE | MOTEUR 3-PH . FREIN C.C | 3-PH. MOTOR G.S. BREMSE | MOT. TRIFAS. FR. C.C. |
| | 1 | | 0001337756D | 1.00 | MOTORE TRIF. FRENO C.C. | 3-PH. MOTOR D.C. BRAKE | MOTEUR 3-PH . FREIN C.C | 3-PH. MOTOR G.S. BREMSE | MOT. TRIFAS. FR. C.C. |
| | 1 | | 0001337831C | 1.00 | MOTORE TRIF. | 3-PH. MOTOR | 3-PH. MOTEUR | 3-PH. MOTOR | MOT.TRIFAS. |
| | 1 | | 0001337832E | 1.00 | MOTORE TRIF. | 3-PH. MOTOR | 3-PH. MOTEUR | 3-PH. MOTOR | MOT.TRIFAS. |
| | 1 | | 0001337834L | 1.00 | MOTORE TRIF. | 3-PH. MOTOR | 3-PH. MOTEUR | 3-PH. MOTOR | MOT.TRIFAS. |
| | 1 | | 0001337835B | 1.00 | MOTORE TRIF. | 3-PH. MOTOR | 3-PH. MOTEUR | 3-PH. MOTOR | MOT.TRIFAS. |
| | 1 | | 0001337836D | 1.00 | MOTORE TRIF. | 3-PH. MOTOR | 3-PH. MOTEUR | 3-PH. MOTOR | MOT.TRIFAS. |
| | 1 | | 0001337869D | 1.00 | MOTORE TRIF. FRENO C.C. | 3-PH. MOTOR D.C. BRAKE | 3-PH. MOTEUR FREIN C.C. | 3-PH. MOTOR G.S. BREMSE | MOT.TRIFAS.FR.C.C. |
| | 1 | | 0001337870E | 1.00 | MOTORE TRIF. FRENO C.C. | 3-PH. MOTOR D.C. BRAKE | 3-PH. MOTEUR FREIN C.C. | 3-PH. MOTOR G.S. BREMSE | MOT.TRIFAS.FR.C.C. |
| | 1 | | 0001337871G | 1.00 | MOTORE TRIF. FRENO C.C. | 3-PH. MOTOR D.C. BRAKE | 3-PH. MOTEUR FREIN C.C. | 3-PH. MOTOR G.S. BREMSE | MOT.TRIFAS.FR.C.C. |
| | 1 | | 0001337873B | 1.00 | MOTORE TRIF. FRENO C.C. | 3-PH. MOTOR D.C. BRAKE | 3-PH. MOTEUR FREIN C.C. | 3-PH. MOTOR G.S. BREMSE | MOT.TRIFAS.FR.C.C. |
| | 1 | | 0001337874D | 1.00 | MOTORE TRIF. FRENO C.C. | 3-PH. MOTOR D.C. BRAKE | 3-PH. MOTEUR FREIN C.C. | 3-PH. MOTOR G.S. BREMSE | MOT.TRIFAS.FR.C.C. |
| | 2 | | 0316332549H | 1.00 | DISTANZIALE | SPACER | ENTRETOISE | DISTANZSTUECK | DISTANCIADOR |
| | 2 | | 0322730307L | 1.00 | DISTANZIALE | SPACER | ENTRETOISE | DISTANZSTUECK | DISTANCIADOR |
| | 3 | | 0000640190G | 4.00 | DADO | NUT | ECROU | MUTTER | TUERCA |
| | 4 | | 0322730172B | 1.00 | PULEGGIA | PULLEY | POULIE | RIEMENSCHEIBE | POLEA |
| | 4 | | 0322730173D | 1.00 | PULEGGIA | PULLEY | POULIE | RIEMENSCHEIBE | POLEA |
| | 4 | | 0322730174F | 1.00 | PULEGGIA | PULLEY | POULIE | RIEMENSCHEIBE | POLEA |
| | 4 | | 0322730175H | 1.00 | PULEGGIA | PULLEY | POULIE | RIEMENSCHEIBE | POLEA |
| | 4 | | 0322730176A | 1.00 | PULEGGIA | PULLEY | POULIE | RIEMENSCHEIBE | POLEA |
| | 4 | | 0322730177C | 1.00 | PULEGGIA | PULLEY | POULIE | RIEMENSCHEIBE | POLEA |
| | 4 | | 0322730178E | 1.00 | PULEGGIA | PULLEY | POULIE | RIEMENSCHEIBE | POLEA |
| | 4 | | 0322730179G | 1.00 | PULEGGIA | PULLEY | POULIE | RIEMENSCHEIBE | POLEA |
| | 5 | | 0000604041G | 1.00 | CINGHIA PIATTA | FLAT BELT | COURROIE PLATE | FLACHRIEMEN | CORREA PLANA |

| N | P | C | CODICE | Q.TY | DENOMINAZIONE | DESCRIPTION | DESIGNATION | BEZEICHNUNG | DENOMINACION |
|---|---|---|---|---|---|---|---|---|---|
| | 5 | | 0000604053C | 1.00 | CINGHIA | BELT | COURROIE | RIEMEN | CORREA |
| | 5 | | 0000604151A | 1.00 | CINGHIA | BELT | COURROIE | RIEMEN | CORREA |
| | 5 | | 0000604152C | 1.00 | CINGHIA PIATTA | FLAT BELT | COURROIE PLATE | FLACHRIEMEN | CORREA PLANA |
| | 5 | | 0000605369E | 1.00 | CINGHIA PIATTA | FLAT BELT | COURROIE PLATE | FLACHRIEMEN | CORREA PLANA |
| | 5 | | 0000605370F | 1.00 | CINGHIA PIATTA | FLAT BELT | COURROIE PLATE | FLACHRIEMEN | CORREA PLANA |
| | 5 | | 0000605371H | 1.00 | CINGHIA PIATTA | FLAT BELT | COURROIE PLATE | FLACHRIEMEN | CORREA PLANA |
| | 5 | | 0000605372A | 1.00 | CINGHIA PIATTA | FLAT BELT | COURROIE PLATE | FLACHRIEMEN | CORREA PLANA |
| | 6 | | 0522730300H | 1.00 | SUPPORTO MOTORE | SUPPORT | SUPPORT | STUETZE | SOPORTE MOTOR |
| | 7 | | 0000305249G | 1.00 | RONDELLA | WASHER | RONDELLE | SCHEIBE | ARANDELA |
| | 7 | | 0319431135F | 1.00 | RONDELLA | WASHER | RONDELLE | SCHEIBE | ARANDELA |
| | 8 | | 0000310246G | 1.00 | VITE | SCREW | VIS | SCHRAUBE | TORNILLO |
| | 8 | | 0000310363E | 1.00 | VITE | SCREW | VIS | SCHRAUBE | TORNILLO |

227-1104

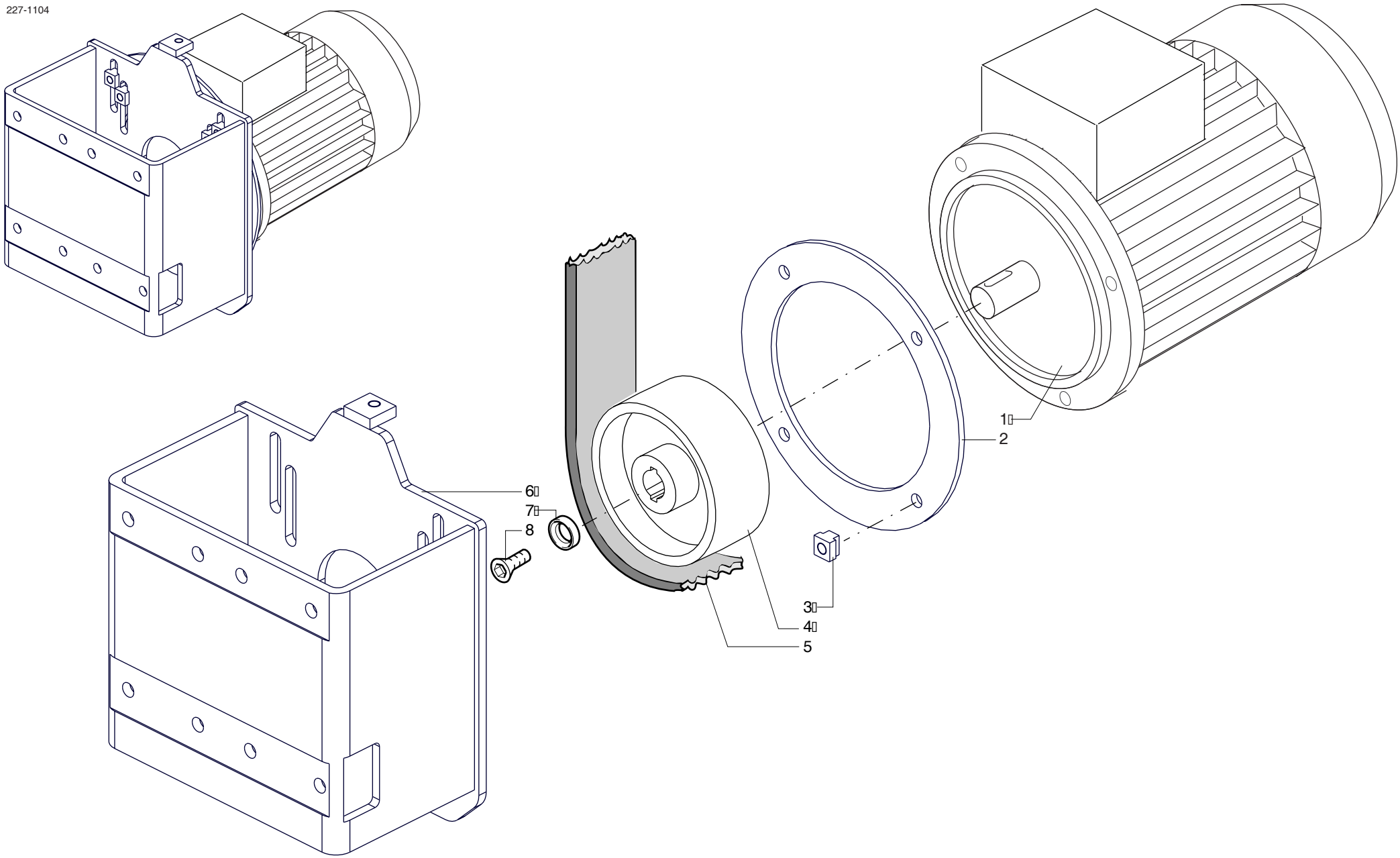


| | | | |
|---|---|---|---|
| scm | SUPERSET XL | MOTORIZZAZIONE - (01.01.1901 -> - p.20,06,2007)<br>MOTORIZATION - MOTORISATION<br>MOTORISIERUNG - MOTORIZACION | 227-1104-0 |

| N | P | C | CODICE | Q.TY | DENOMINAZIONE | DESCRIPTION | DESIGNATION | BEZEICHNUNG | DENOMINACION |
|---|---|---|---|---|---|---|---|---|---|
| | 01.01.1901 -> 01.01.3000 | | | | Note: 2822731725A | | | | |
| | 1 | | 0711136303F | 1.00 | GIUNTO | JOINT | JOINT | KUPPLUNG | JUNTA |
| | 1 | | 0722740132H | 1.00 | GIUNTO | JOINT | JOINT | KUPPLUNG | JUNTA |
| | 2 | | 0316030500H | 1.00 | BOCCOLA | BUSHING | DOUILLE | BUCHSE | CASQUILLO |
| | 3 | | 0310130604G | 1.00 | SCATOLA DI RINVIO | TRANSFER CASE | BOITE | VORGELEGEKASTEN | CAJA |
| | 4 | | 0319430902C | 1.00 | VITE | SCREW | VIS | SCHRAUBE | TORNILLO |
| | 5 | | 0000645045F | 1.00 | LINGUETTA | FEATHER KEY | LANGUETTE | FEDERKEIL | LINGUETA |
| | 6 | | 0000644268H | 1.00 | ANELLO SEEGER | CIRCLIP | CIRCLIP | SEEGERRING | SEEGER |
| | 7 | | 0316031000H | 1.00 | DISTANZIALE | SPACER | ENTRETOISE | DISTANZSTUECK | DISTANCIADOR |
| | 8 | | 0000644043A | 1.00 | ANELLO SEEGER | CIRCLIP | CIRCLIP | SEEGERRING | SEEGER |
| | 9 | | 0000606100E | 1.00 | CUSCINETTO | BEARING | ROULEMENT | LAGER | COJINETE |
| | 10 | | 0310190116E | 1.00 | VITE SENZA FINE | WORM | VIS SANS FIN | SCHNECKE | TORNILO SIN FIN |
| | 10 | | 0311136434E | 1.00 | VITE SENZA FINE | WORM | VIS SANS FIN | SCHNECKE | TORNILO SIN FIN |
| | 11 | | 0000613034D | 4.00 | RALLA | WASHER | CRAPAUDINE | SCHEIBE | RANGUA |
| | 12 | | 0000613033B | 2.00 | GABBIA A RULLINI | ROLLER CAGE | CAGE A ROULEAUX | WALZENKAEFIG | COJINETE |
| | 13 | | 0319430904G | 1.00 | CORONA DENTATA | GEAR WHEEL | COURONNE DENTEE | ZAHNRAD | RUEDA DENTADA |
| | 14 | | 0322740142A | 2.00 | FLANGIA | FLANGE | FLASQUE | FLANSCH | BRIDA |

227-1105

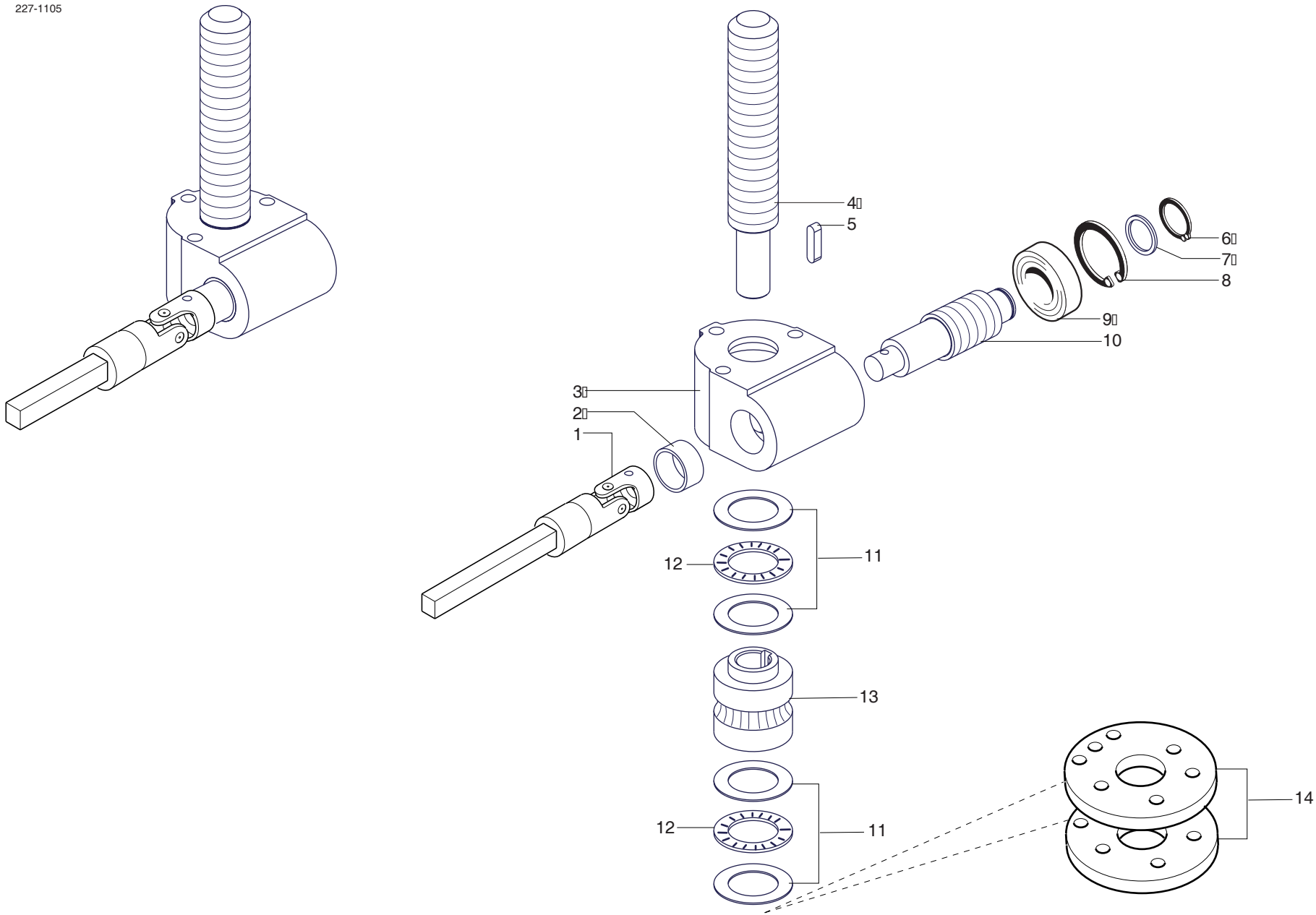


| scm | SUPERSET XL | POSIZIONAMENTO VERTICALE MANUALE - (01.01.1901 -> - p.20,06,2007)<br>MANUAL VERTICAL ADJUSTMENT - REGLAGE VERTICAL MANUEL<br>MANUELLE VERTIKALVERSTELLUNG - UBICACION VERTICAL MANUAL | 227-1105-0 |
|---|---|---|---|

| scm | SUPERSET XL | POSIZIONAMENTO VERTICALE MANUALE - (p.20,06,2007)<br>MANUAL VERTICAL ADJUSTMENT - REGLAGE VERTICAL MANUEL<br>MANUELLE VERTIKALVERSTELLUNG - UBICACION VERTICAL MANUAL | 227-1106-0 |
|---|---|---|---|

| N | P | C | CODICE | Q.TY | DENOMINAZIONE | DESCRIPTION | DESIGNATION | BEZEICHNUNG | DENOMINACION |
|---|---|---|---|---|---|---|---|---|---|
| | 01.01.1901 -> 01.01.3000 | | | | Note: 2822731720L | | | | |
| | 1 | | 0000635055E | 1.00 | INDICATORE NUMERICO | INDICATOR | INDICATEUR | ANZEIGER | INDICADOR NUMERICO |
| | 1 | | 0000635143B | 1.00 | INDICATORE NUMERICO | INDICATOR | INDICATEUR | ANZEIGER | INDICADOR NUMERICO |
| | 1 | | 0766580007D | 1.00 | INDICATORE NUMERICO LIKA | INDICATOR | INDICATEUR | ANZEIGER | INDICADOR NUMERICO |
| | 2 | | 0522730170B | 1.00 | FLANGIA | FLANGE | FLASQUE | FLANSCH | BRIDA |
| | 3 | | 0000613041H | 2.00 | GABBIA A RULLINI | ROLLER CAGE | CAGE A ROULEAUX | WALZENKAEFIG | COJINETE |
| | 4 | | 0316330020C | 1.00 | RONDELLA | WASHER | RONDELLE | SCHEIBE | ARANDELA |
| | 5 | | 0000613045G | 4.00 | RALLA | WASHER | CRAPAUDINE | SCHEIBE | RANGUA |
| | 6 | | 0322730171L | 1.00 | BOCCOLA | BUSHING | DOUILLE | BUCHSE | CASQUILLO |
| | 7 | | 0322730625D | 1.00 | BARRA | BAR | BARRE | STANGE | BARRA |
| | 8 | | 0722730303L | 1.00 | GIUNTO | JOINT | JOINT | KUPPLUNG | JUNTA |
| | 9 | | 0322775007G | 1.00 | TARGA | PLATE | PLAQUE | SCHILD | TARJETA |
| | 10 | | 0319013512L | 1.00 | POMELLO | BALL GRIP | POIGNEE | KUGELGRIFF | POMO |

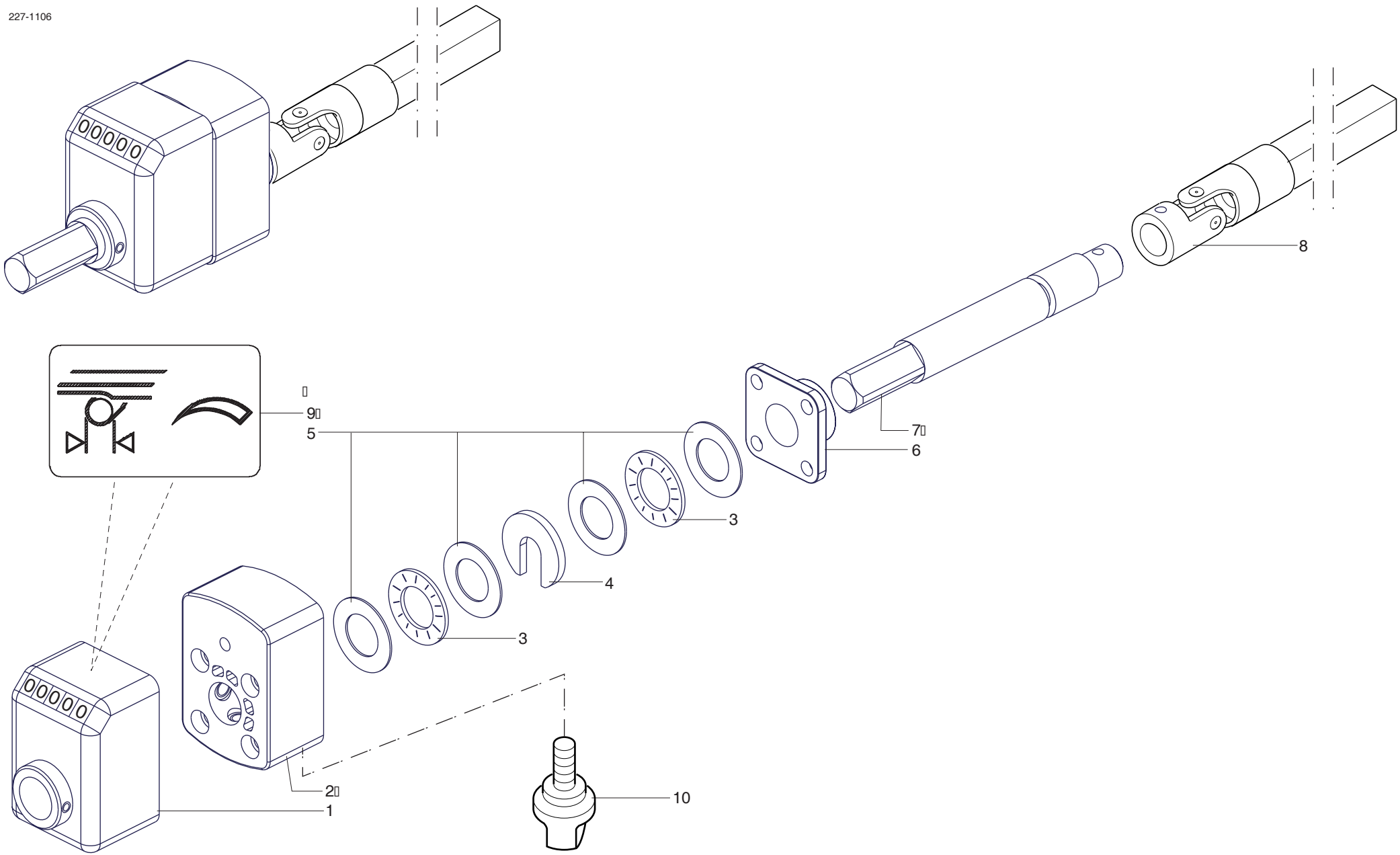


| scm | SUPERSET XL | POSIZIONAMENTO VERTICALE MANUALE - (01.01.1901 ->  - p.20,06,2007)<br>MANUAL VERTICAL ADJUSTMENT - REGLAGE VERTICAL MANUEL<br>MANUELLE VERTIKALVERSTELLUNG - UBICACION VERTICAL MANUAL | 227-1106-0 |
|---|---|---|---|

| N | P | C | CODICE | Q.TY | DENOMINAZIONE | DESCRIPTION | DESIGNATION | BEZEICHNUNG | DENOMINACION |
|---|---|---|---|---|---|---|---|---|---|
| | 01.01.1901 -> 01.01.3000 | | | | Note: 3022775020A | | | | |
| | 1 | | 0321910796B | 1.00 | TARGA | PLATE | PLAQUE | SCHILD | TARJETA |
| | 1 | | 0339010902F | 1.00 | TARGA | RATING PLATE | PLAQUE | SCHILD | TARJETA |
| | 2 | | 0321910797D | 1.00 | TARGA | PLATE | PLAQUE | SCHILD | TARJETA |
| | 3 | | 0302110049H | 1.00 | TARGA | PLATE | PLAQUE | SCHILD | TARJETA |
| | 4 | | 0302110069A | 1.00 | TARGA | PLATE | PLAQUE | SCHILD | TARJETA |

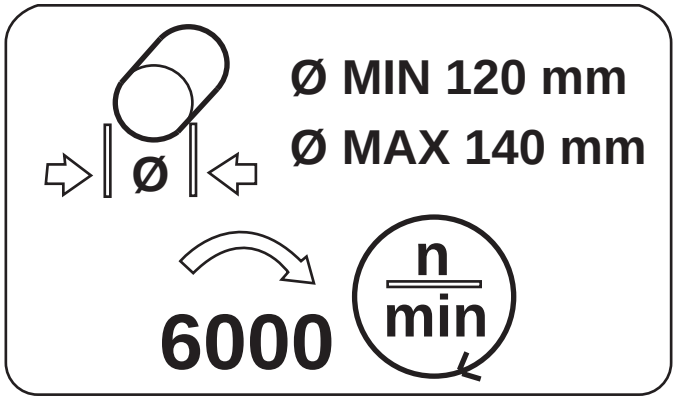
Ø MIN 120 mm
Ø MAX 140 mm
Ø
6000
n
min

1

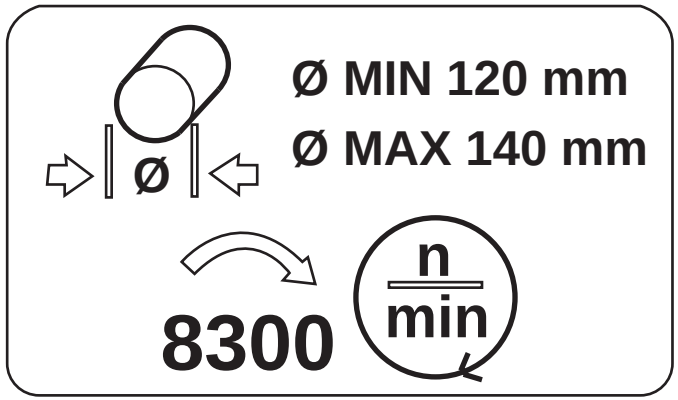
Ø MIN 120 mm
Ø MAX 140 mm
Ø
8300
n
min

2

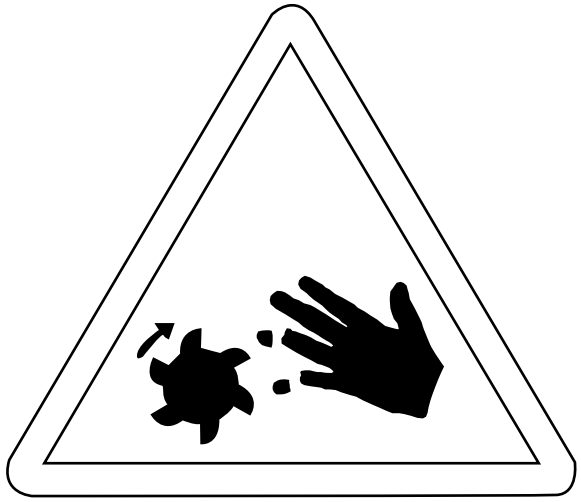

3


WARNING
ROTATING CUTTER HEAD.
Do NOT operate without guard:
lockout / tagout before servicing:

4

| scm | SUPERSET XL | ALBERO TOUPIE DESTRO - (p.20,06,2007)<br>MOULDING SPINDLE (RIGHT) - ARBRE TOUPIE (DROIT)<br>FRAESSPINDEL (RECHT) - EJE TUPI DERECHO | 227-1200-0 |
|---|---|---|---|

| N | P | C | CODICE | Q.TY | DENOMINAZIONE | DESCRIPTION | DESIGNATION | BEZEICHNUNG | DENOMINACION |
|---|---|---|---|---|---|---|---|---|---|
| | 01.01.1901 -> 01.01.3000 | | | | Note: 3122734000A | | | | |
| | 1 | | 1111111111F | 0.00 | INDICE | POINTER | INDICATEUR | ZEIGER | INDICE |
| | 2 | | 0310830314L | 1.00 | BOCCOLA | BUSHING | DOUILLE | BUCHSE | CASQUILLO |
| | 3 | | 2711135400C | 1.00 | BLOCCAGGIO | LOCKING DEVICE | BLOCAGE | SPERRE | BLOQUEO |
| | 3 | | 2711135410D | 1.00 | BLOCCAGGIO | LOCKING DEVICE | BLOCAGE | SPERRE | BLOQUEO |

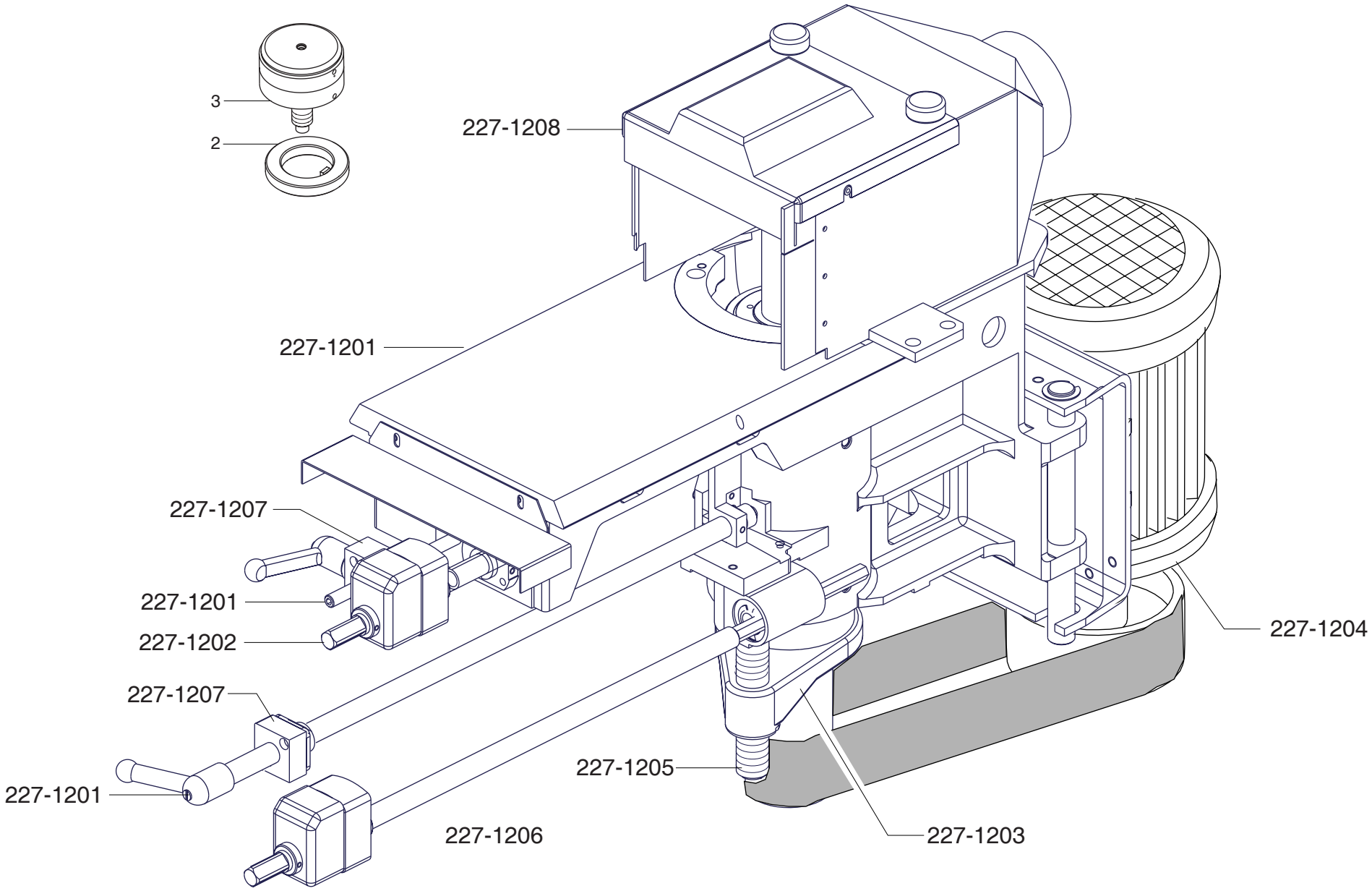


| | | | |
|---|---|---|---|
| scm | SUPERSET XL | ALBERO TOUPIE DESTRO - (01.01.1901 -> - p.20,06,2007)<br>MOULDING SPINDLE (RIGHT) - ARBRE TOUPIE (DROIT)<br>FRAESSPINDEL (RECHT) - EJE TUPI DERECHO | 227-1200-0 |

| scm | SUPERSET XL | SLITTA - (p.20,06,2007)<br>SLIDE - GLISSIERE<br>SCHLITTEN - TRINEO | 227-1201-0 |
|---|---|---|---|

| N | P | C | CODICE | Q.TY | DENOMINAZIONE | DESCRIPTION | DESIGNATION | BEZEICHNUNG | DENOMINACION |
|---|---|---|---|---|---|---|---|---|---|
| | 01.01.1901 -> 01.01.3000 | | | | Note: 2822731010C | | | | |
| | 1 | | 0719412602C | 1.00 | MANIGLIA | HANDLE | POIGNEE | HANDGRIFF | MANIJA |
| | 1 | | 0719412603E | 1.00 | LEVA | LEVER | LEVIER | HEBEL | PALANCA |
| | 2 | | 0000304305E | 1.00 | VITE | SCREW | VIS | SCHRAUBE | TORNILLO |
| | 3 | | 0322731012D | 1.00 | PERNO | PIN | PIVOT | BOLZEN | PERNO |
| | 3 | | 0322731025B | 1.00 | ASTA | ROD | TIGE | STANGE | ASTA |
| | 4 | | 0310130632F | 1.00 | MADREVITE | NUT SCREW | VIS-MERE | MUTTERGEWINDE | TUERCA |
| | 5 | | 0322730135D | 1.00 | ASTA | ROD | TIGE | STANGE | ASTA |
| | 6 | | 0322731016C | 1.00 | CARTER | COVER | CARTER | DECKEL | CARTER |
| | 7 | | 0322731011B | 1.00 | SLITTA | SLIDE | COULISSE | SCHLITTEN | CORREDERA |
| | 7 | | 0322731017E | 1.00 | SLITTA | SLIDE | COULISSE | SCHLITTEN | CORREDERA |
| | 7 | | 0322731032F | 1.00 | SLITTA | SLIDE | COULISSE | SCHLITTEN | CORREDERA |
| | 7 | | 0322731033H | 1.00 | SLITTA | SLIDE | COULISSE | SCHLITTEN | CORREDERA |
| | 8 | | 0000305302L | 1.00 | ROSETTA | WASHER | RONDELLE | SCHEIBE | ARANDELA |
| | 8 | | 0000305361D | 2.00 | ROSETTA | WASHER | RONDELLE | SCHEIBE | ARANDELA |
| | 9 | | 0000301363D | 1.00 | DADO | NUT | ECROU | MUTTER | TUERCA |
| | 10 | | 0322730105A | 1.00 | LUNETTA | REST | LUNETTE | LUENETTE | LUNETO |
| | 10 | | 0322730106C | 1.00 | LUNETTA | REST | LUNETTE | LUENETTE | LUNETO |
| | 11 | | 0000301301C | 3.00 | DADO | NUT | ECROU | MUTTER | TUERCA |
| | 12 | | 0322730169F | 3.00 | VITE DI REGISTRO | SCREW | VIS REGLAGE | STELLSCHRAUBE | TORNILLO DE REGULACION |
| | 13 | | 0000308374E | 1.00 | VITE | SCREW | VIS | SCHRAUBE | TORNILLO |
| | 13 | | 0522730151B | 1.00 | TIRANTE | TIE-ROD | TIRANT | ZUGBOLZEN | TIRANTE |
| | 14 | | 0322731026D | 1.00 | LEVA | LEVER | LEVIER | HEBEL | PALANCA |
| | 15 | | 0000307335B | 1.00 | SPINA | PIN | GOUPILLE | STIFT | REMACHE |
| | 16 | | 0387672010F | 1.00 | RACCORDO | FITTING | RACCORD | ANSCHLUSS | CONEXION |
| | 17 | | 0311130614A | 1.00 | ASTA | ROD | TIGE | STANGE | ASTA |

227-1201

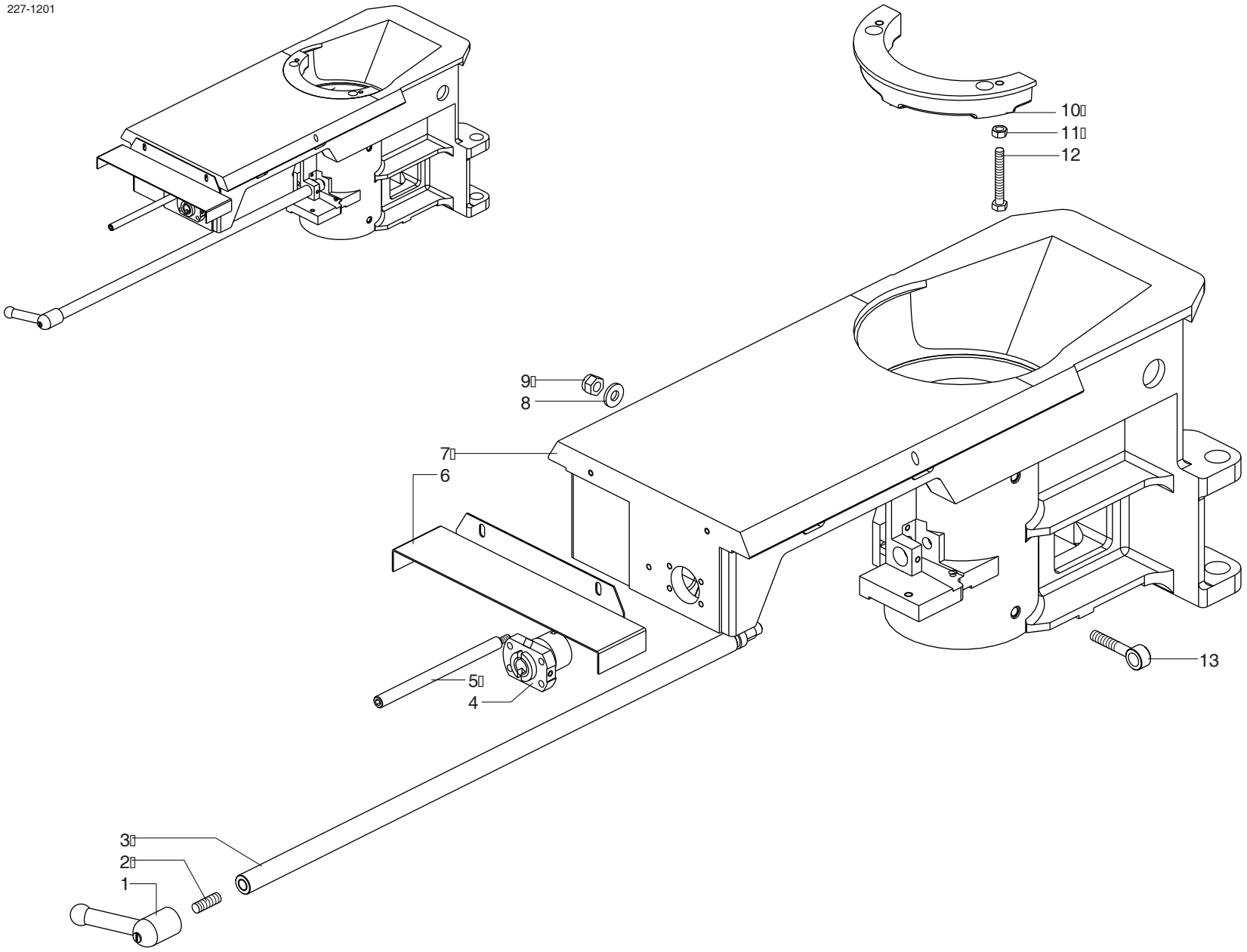


| | | | |
|---|---|---|---|
| scm | **SUPERSET XL** | **SLITTA - (01.01.1901 -> 19.04.2000 - p.20,06,2007)**<br>**SLIDE - GLISSIERE**<br>**SCHLITTEN - TRINEO** | **227-1201-0** |

22712011

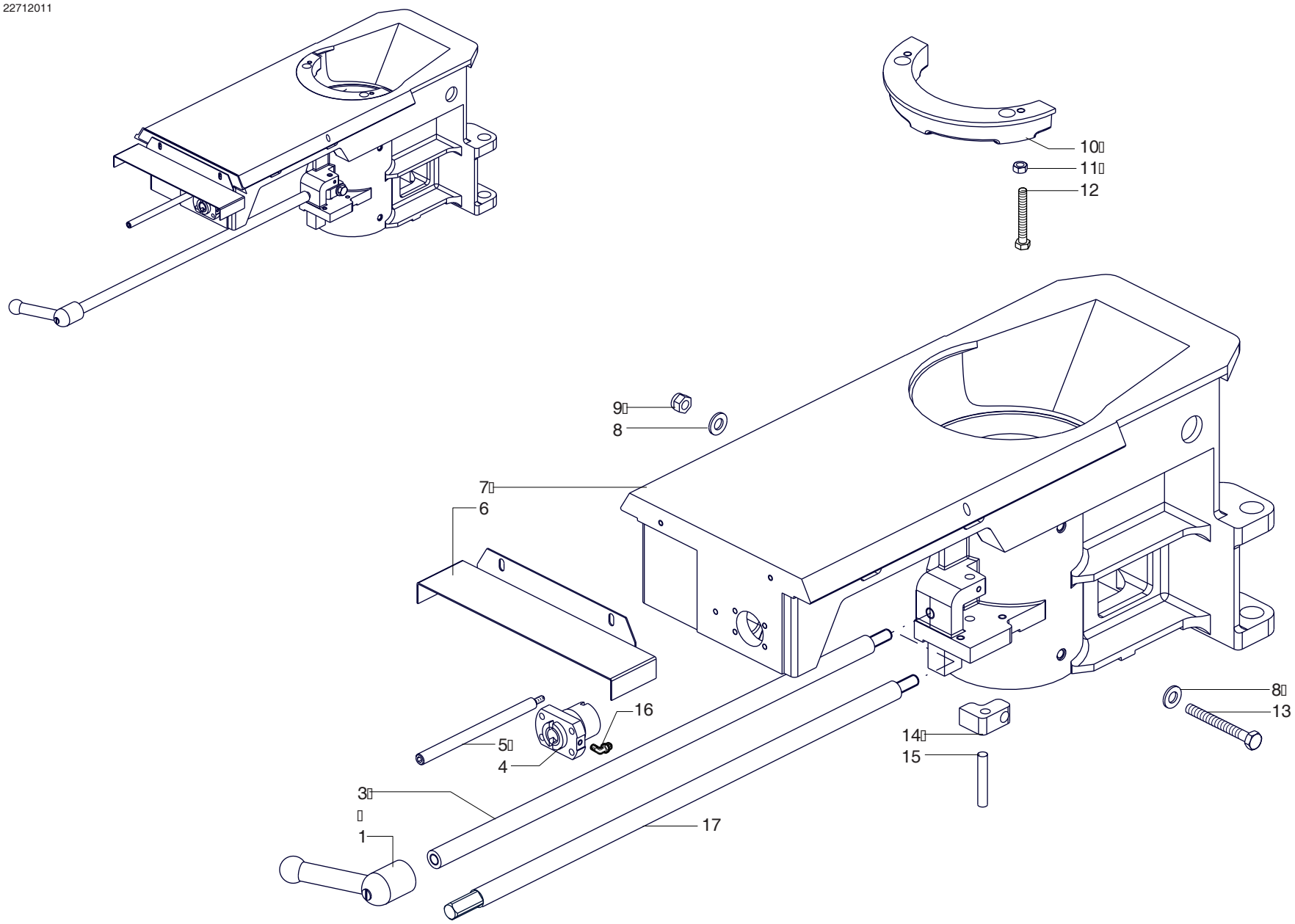


| | | | |
|---|---|---|---|
| scm | **SUPERSET XL** | **SLITTA - (20.04.2000 -> - p.20,06,2007)**<br>**SLIDE - GLISSIERE**<br>**SCHLITTEN - TRINEO** | **227-1201-0** |

| N | P | C | CODICE | Q.TY | DENOMINAZIONE | DESCRIPTION | DESIGNATION | BEZEICHNUNG | DENOMINACION |
|---|---|---|---|---|---|---|---|---|---|
| | 01.01.1901 -> 01.01.3000 | | | | Note: 2822731020A | | | | |
| | 1 | | 0001905110A | 2.00 | RACCORDO | FITTING | RACCORD | ANSCHLUSS | CONEXION |
| | 2 | | 0001502030C | 1.00 | CILINDRO PNEUMATICO | PNEUMATIC CYLINDER | CYLINDRE PNEUMATIQUE | PNEUMATIKZYLINDER | CILINDRO NEUMATICO |
| | 2 | | 0002038165L | 1.00 | CILINDRO PNEUMATICO | PNEUMATIC CYLINDER | CYLINDRE PNEUMATIQUE | PNEUMATIKZYLINDER | CILINDRO NEUMATICO |
| | 3 | | 0322731029A | 1.00 | ATTACCO | CONNECTING ROD | BARRE FIXATION | STAB | CONEXION |
| | 4 | | 0310130632F | 1.00 | MADREVITE | NUT SCREW | VIS-MERE | MUTTERGEWINDE | TUERCA |
| | 5 | | 0322730135D | 1.00 | ASTA | ROD | TIGE | STANGE | ASTA |
| | 6 | | 0322731016C | 1.00 | CARTER | COVER | CARTER | DECKEL | CARTER |
| | 7 | | 0322731030B | 1.00 | SLITTA | SLIDE | COULISSE | SCHLITTEN | CORREDERA |
| | 7 | | 0322731031D | 1.00 | SLITTA | SLIDE | COULISSE | SCHLITTEN | CORREDERA |
| | 7 | | 0322731035C | 1.00 | SLITTA P.R.L. | SLIDE | COULISSE | SCHLITTEN | CORREDERA |
| | 7 | | 0322731037G | 1.00 | SLITTA P.R.L. | SLIDE | COULISSE | SCHLITTEN | CORREDERA |
| | 8 | | 0000305044B | 1.00 | ROSETTA | WASHER | RONDELLE | SCHEIBE | ARANDELA |
| | 8 | | 0000305361D | 1.00 | ROSETTA | WASHER | RONDELLE | SCHEIBE | ARANDELA |
| | 8 | | 0000305780C | 3.00 | ANELLO | RING | BAGUE | RING | ANILLO |
| | 9 | | 0322731022E | 1.00 | PERNO | PIN | PIVOT | BOLZEN | PERNO |
| | 10 | | 0322731023G | 1.00 | BLOCCAGGIO | LOCKING DEVICE | BLOCAGE | SPERRE | BLOQUEO |
| | 11 | | 0001344082B | 1.00 | ELETTROVALVOLA V.110 | SOLENOID VALVE | ELECTROVALVE | MAGNETVENTIL | ELECTROVALVULA |
| | 12 | | 0322730169F | 3.00 | VITE DI REGISTRO | SCREW | VIS REGLAGE | STELLSCHRAUBE | TORNILLO DE REGULACION |
| | 13 | | 0000301301C | 3.00 | DADO | NUT | ECROU | MUTTER | TUERCA |
| | 14 | | 0322730105A | 1.00 | LUNETTA | REST | LUNETTE | LUENETTE | LUNETO |
| | 14 | | 0322730106C | 1.00 | LUNETTA | REST | LUNETTE | LUENETTE | LUNETO |
| | 15 | | 0322731028H | 1.00 | PIASTRA | PLATE | PLAQUE | PLATTE | PLANCHA |
| | 16 | | 0322371108C | 1.00 | SOFFIATORE | BLOWER | SOUFFLEUR | BLAESER | SOPLADOR |
| | 17 | | 0001308055A | 1.00 | FINECORSA | MICROSWITCH | FIN DE COURSE | MIKROSCHALTER | FIN CARRERA |
| | 17 | | 2711131510B | 1.00 | FINECORSA | LIMIT SWITCH | FIN DE COURSE | ENDSCHALTER | FIN CARRERA |
| | 17 | | 2722740801A | 1.00 | FINECORSA | LIMIT SWITCH | FIN DE COURSE | ENDSCHALTER | FIN CARRERA |
| | 17 | | 2722740891A | 1.00 | FINECORSA | LIMIT SWITCH | FIN DE COURSE | ENDSCHALTER | FIN CARRERA |
| | 18 | | 0322731024L | 1.00 | PIASTRA | PLATE | PLAQUE | PLATTE | PLANCHA |
| | 19 | | 0001308846L | 1.00 | FINECORSA PER CILINDRO | LIMIT SWITCH | FIN DE COURSE | ENDSCHALTER | FIN CARRERA |
| | 20 | | 0000626553A | 1.00 | SUPPORTO | SUPPORT | SUPPORT | STUETZE | SOPORTE |
| | 20 | | 0001308100F | 1.00 | SUPPORTO | SUPPORT | SUPPORT | STUETZE | SOPORTE |
| | 21 | | 0001304320H | 1.00 | CONNETTORE | CONNECTOR | CONNECTEUR | VERBINDER | CONECTADOR |
| | 22 | | 0000308485A | 1.00 | VITE | SCREW | VIS | SCHRAUBE | TORNILLO |
| | 23 | | 0000301484A | 1.00 | DADO | NUT | ECROU | MUTTER | TUERCA |
| | 24 | | 0001508862E | 1.00 | VALVOLA | VALVE | VALVE | VENTIL | VALV. |
| | 25 | | 0001502860D | 1.00 | CILINDRO PNEUMATICO | PNEUMATIC CYLINDER | CYLINDRE PNEUM. | PN.ZYLINDER | STANDARD |
| | 26 | | 0522731036L | 1.00 | BASE | BASE | BASE | UNTERLAGE | BASE |
| | 27 | | 0001344098F | 1.00 | ELETTROVALVOLA V.110 | SOLENOID VALVE | ELECTROVALVE | MAGNETVENTIL | ELECTROVALVULA |
| | 28 | | 0311132716L | 1.00 | PERNO | PIN | PIVOT | BOLZEN | PERNO |

| N | P | C | CODICE | Q.TY | DENOMINAZIONE | DESCRIPTION | DESIGNATION | BEZEICHNUNG | DENOMINACION |
|---|---|---|---|---|---|---|---|---|---|
| | 29 | | 0000613375G | 2.00 | RALLA | WASHER | CRAPAUDINE | SCHEIBE | RANGUA |
| | 30 | | 0000613029D | 1.00 | GABBIA A RULLINI | ROLLER CAGE | CAGE A ROULEAUX | WALZENKAEFIG | COJINETE |

22712015

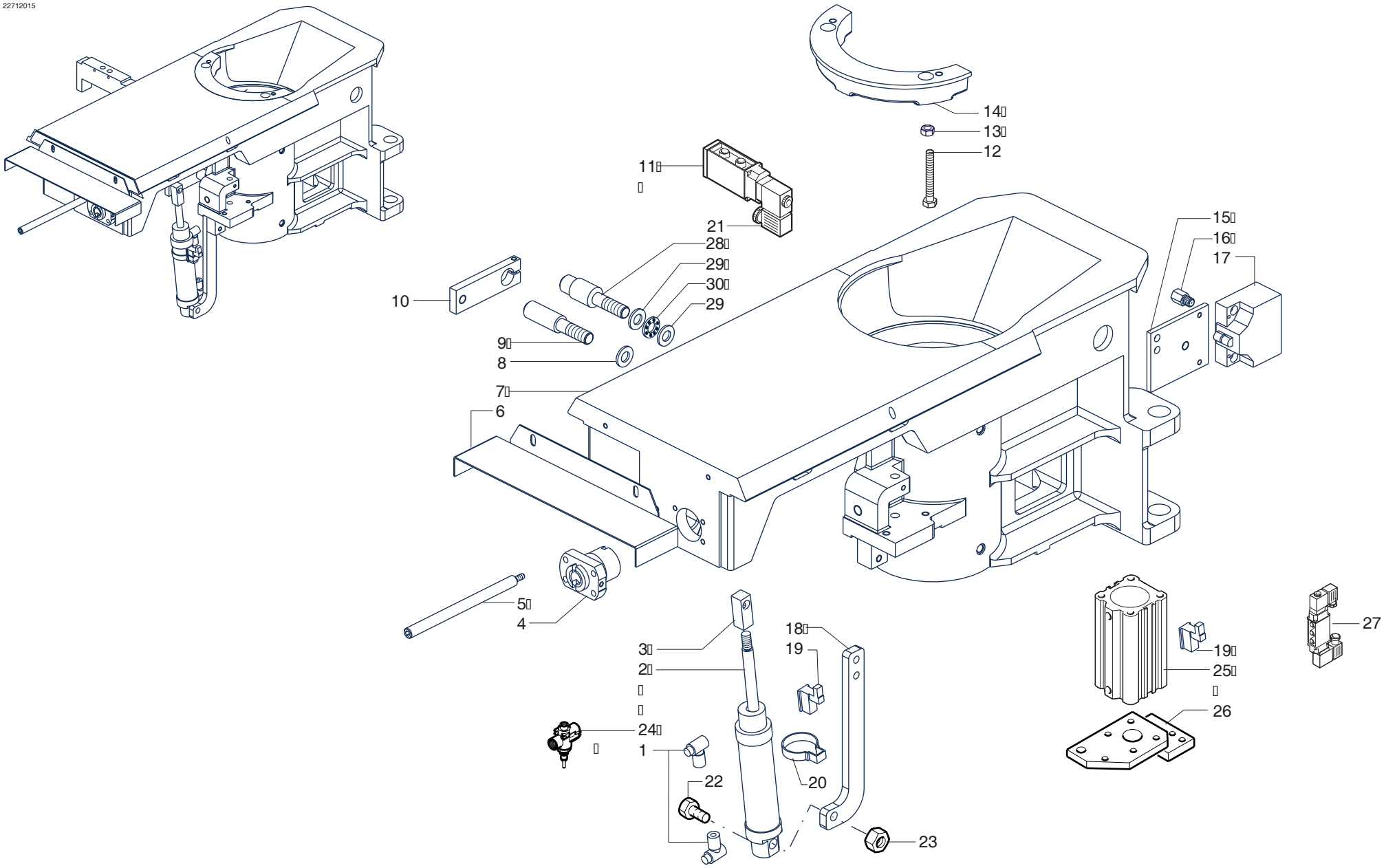


| | | | |
|---|---|---|---|
| scm | **SUPERSET XL** | **SLITTA - (01.01.1901 -> - p.20,06,2007)**<br>**SLIDE - GLISSIERE**<br>**SCHLITTEN - TRINEO** | **227-1201-5** |

| N | P | C | CODICE | Q.TY | DENOMINAZIONE | DESCRIPTION | DESIGNATION | BEZEICHNUNG | DENOMINACION |
|---|---|---|---|---|---|---|---|---|---|
| | 01.01.1901 -> 01.01.3000 | | | | Note: 2822731130G | | | | |
| | 1 | | 0000635053A | 1.00 | INDICATORE | INDICATOR | INDICATEUR | ANZEIGER | INDICADOR |
| | 1 | | 0000635142L | 1.00 | INDICATORE NUMERICO | INDICATOR | INDICATEUR | ANZEIGER | INDICADOR NUMERICO |
| | 1 | | 0766580007D | 1.00 | INDICATORE NUMERICO LIKA | INDICATOR | INDICATEUR | ANZEIGER | INDICADOR NUMERICO |
| | 2 | | 0522730170B | 1.00 | FLANGIA | FLANGE | FLASQUE | FLANSCH | BRIDA |
| | 3 | | 0000613041H | 2.00 | GABBIA A RULLINI | ROLLER CAGE | CAGE A ROULEAUX | WALZENKAEFIG | COJINETE |
| | 4 | | 0316330020C | 1.00 | RONDELLA | WASHER | RONDELLE | SCHEIBE | ARANDELA |
| | 5 | | 0000613045G | 4.00 | RALLA | WASHER | CRAPAUDINE | SCHEIBE | RANGUA |
| | 6 | | 0322730171L | 1.00 | BOCCOLA | BUSHING | DOUILLE | BUCHSE | CASQUILLO |
| | 7 | | 0322731102E | 1.00 | VITE | SCREW | VIS | SCHRAUBE | TORNILLO |
| | 8 | | 0000305253E | 1.00 | ROSETTA | WASHER | RONDELLE | SCHEIBE | ARANDELA |
| | 9 | | 0000310242H | 1.00 | VITE | SCREW | VIS | SCHRAUBE | TORNILLO |
| | 10 | | 0322775008L | 1.00 | TARGA | PLATE | PLAQUE | SCHILD | TARJETA |
| | 11 | | 0319013512L | 1.00 | POMELLO | BALL GRIP | POIGNEE | KUGELGRIFF | POMO |

227-1202

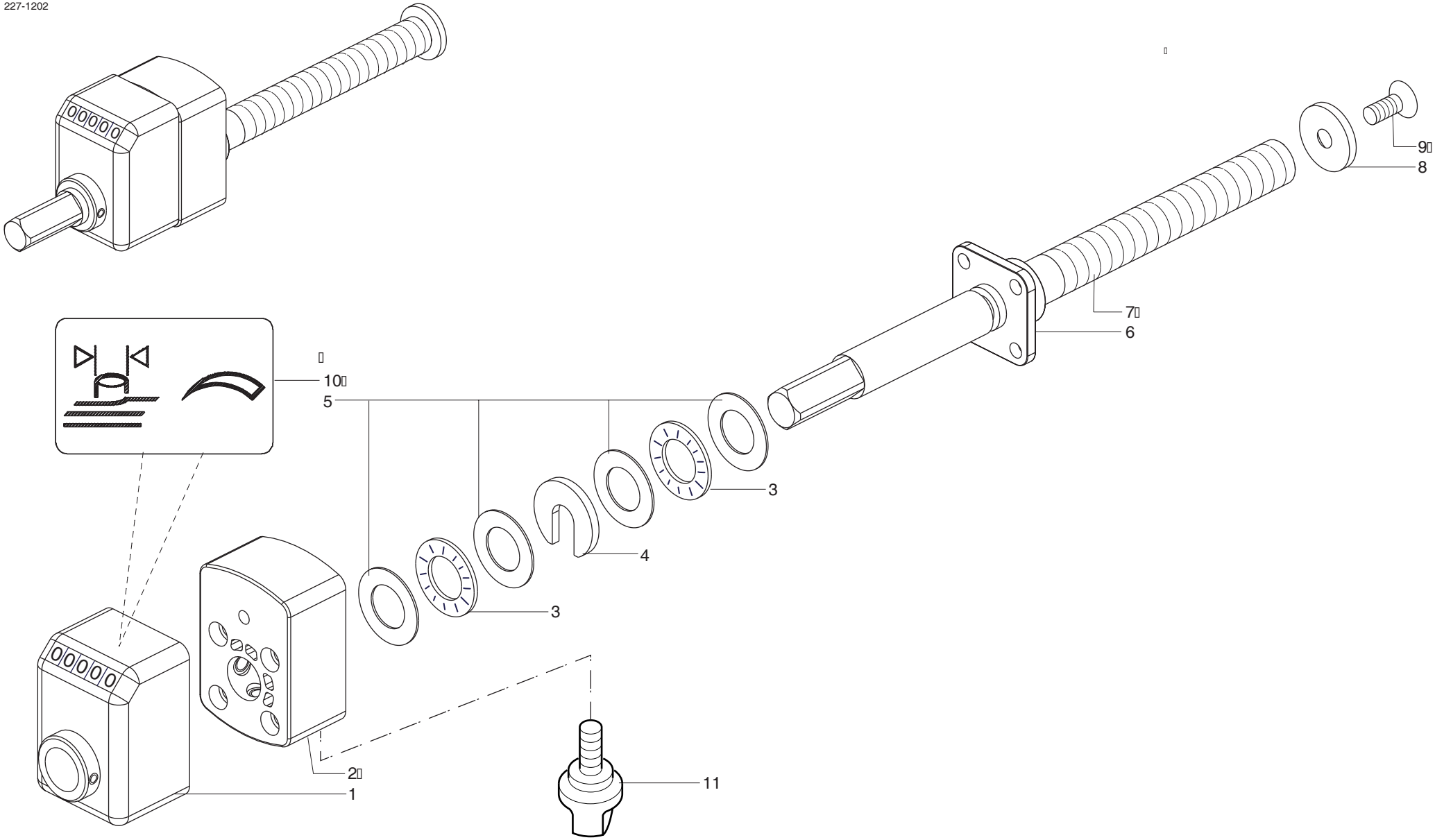


| scm | SUPERSET XL | POSIZIONAMENTO ORIZZONTALE MANUALE - (01.01.1901 ->  - p.20,06,2007)<br>MANUAL HORIZONTAL ADJUSTMENT - REGLAGE HORIZONTAL MANUEL<br>MANUELLE HORIZONTALVERSTELLUNG - UBICACION HORIZONTAL MANUAL | 227-1202-0 |
|---|---|---|---|

| scm | SUPERSET XL | POSIZIONAMENTO ORIZZONTALE - (p.20,06,2007)<br>HORIZONTAL ADJUSTMENT - REGLAGE HORIZONTAL<br>HORIZONTALVERSTELLUNG - UBICACION HORIZONTAL | 227-1202-X |
|---|---|---|---|

| N | P | C | CODICE | Q.TY | DENOMINAZIONE | DESCRIPTION | DESIGNATION | BEZEICHNUNG | DENOMINACION |
|---|---|---|---|---|---|---|---|---|---|
| | 01.01.1901 -> 01.01.3000 | | | | Note: ----- | | | | |
| 1 | | | 0322731401L | 1.00 | SUPPORTO | SUPPORT | SUPPORT | STUETZE | SOPORTE |
| 2 | | | 0319433111G | 1.00 | GUIDA PORTACAMME | CAM HOLDER GUIDE | GUIDE PORTE-CAMES | NOCKENHALTER | GUIA PORTA EXC. |
| 3 | | | 0001347321C | 1.00 | CAMMA TCX-10-34 | CAM | CAME ACTIONNEMENT | TREIBNOCKEN | EXCENT.ACC. |
| 4 | | | 0001347322E | 2.00 | CAMMA TCX-00-24 | CAM | CAME | NOCKEN | EXCENTRICO |
| 5 | | | 0001308592L | 2.00 | FINECORSA | LIMIT SWITCH | FIN DE COURSE | ENDSCHALTER | FIN CARRERA |
| 6 | | | 0322732019A | 1.00 | SUPPORTO | SUPPORT | SUPPORT | STUETZE | SOPORTE |
| 7 | | | 0001331046A | 1.00 | MOTORE TRIF. FRENO C.C. | 3-PH. MOTOR D.C. BRAKE | MOTEUR 3-PH . FREIN C.C | 3-PH. MOTOR G.S. BREMSE | MOT. TRIFAS. FR. C.C. |
| 8 | | | 0000638615G | 1.00 | RIDUTTORE | REDUCING GEAR | REDUCTEUR | GETRIEBE | REDUCTOR |
| 9 | | | 0321930112E | 1.00 | SUPPORTO | SUPPORT | SUPPORT | STUETZE | SOPORTE |
| 10 | | | 0000309180D | 2.00 | VITE | SCREW | VIS | SCHRAUBE | TORNILLO |
| 11 | | | 0311131062L | 1.00 | CARTER | COVER | CARTER | DECKEL | CARTER |
| 12 | | | 0739736141H | 1.00 | ENCODER | ENCODER | ENCODER | ENCODER | ENCODER |
| 13 | | | 0000301559A | 1.00 | GHIERA | RING NUT | EMBOUT | NUTMUTTER | COLLAR |
| 14 | | | 0311014101A | 2.00 | RALLA | WASHER | CRAPAUDINE | SCHEIBE | RANGUA |
| 15 | | | 0000613044E | 4.00 | RALLA | BEARING | CRAPAUDINE | SCHEIBE | RANGUA |
| 16 | | | 0000613040F | 2.00 | GABBIA A RULLINI | ROLLER CAGE | CAGE A ROULEAUX | WALZENKAEFIG | COJINETE |
| 17 | | | 0322731192E | 1.00 | FLANGIA | FLANGE | FLASQUE | FLANSCH | BRIDA |
| 18 | | | 0000645324H | 1.00 | LINGUETTA | FEATHER KEY | LANGUETTE | FEDERKEIL | LINGUETA |
| 19 | | | 0722731191B | 1.00 | VITE+CHIOC.RIC | SCREW+LEAD NUT | VIS+ECROU | SCHNECKE+MUTTER | TORN+TUER A DIBUJO |
| 20 | | | 0522770554F | 1.00 | SCATOLA | BOX | BOITE | KASTEN | CAJA |
| 21 | | | 0766535414B | 1.00 | MOTORE | MOTOR | MOTEUR | MOTOR | MOTOR |
| 22 | | | 0366535401E | 1.00 | INTERFACCIA | RING NUT | EMBOUT | STELLRING | CONEXION |
| 23 | | | 0001308332H | 1.00 | FINECORSA | MICROSWITCH | FIN DE COURSE | MIKROSCHALTER | FIN CARRERA |
| 24 | | | 0322731002C | 1.00 | SUPPORTO | SUPPORT | SUPPORT | STUETZE | SOPORTE |

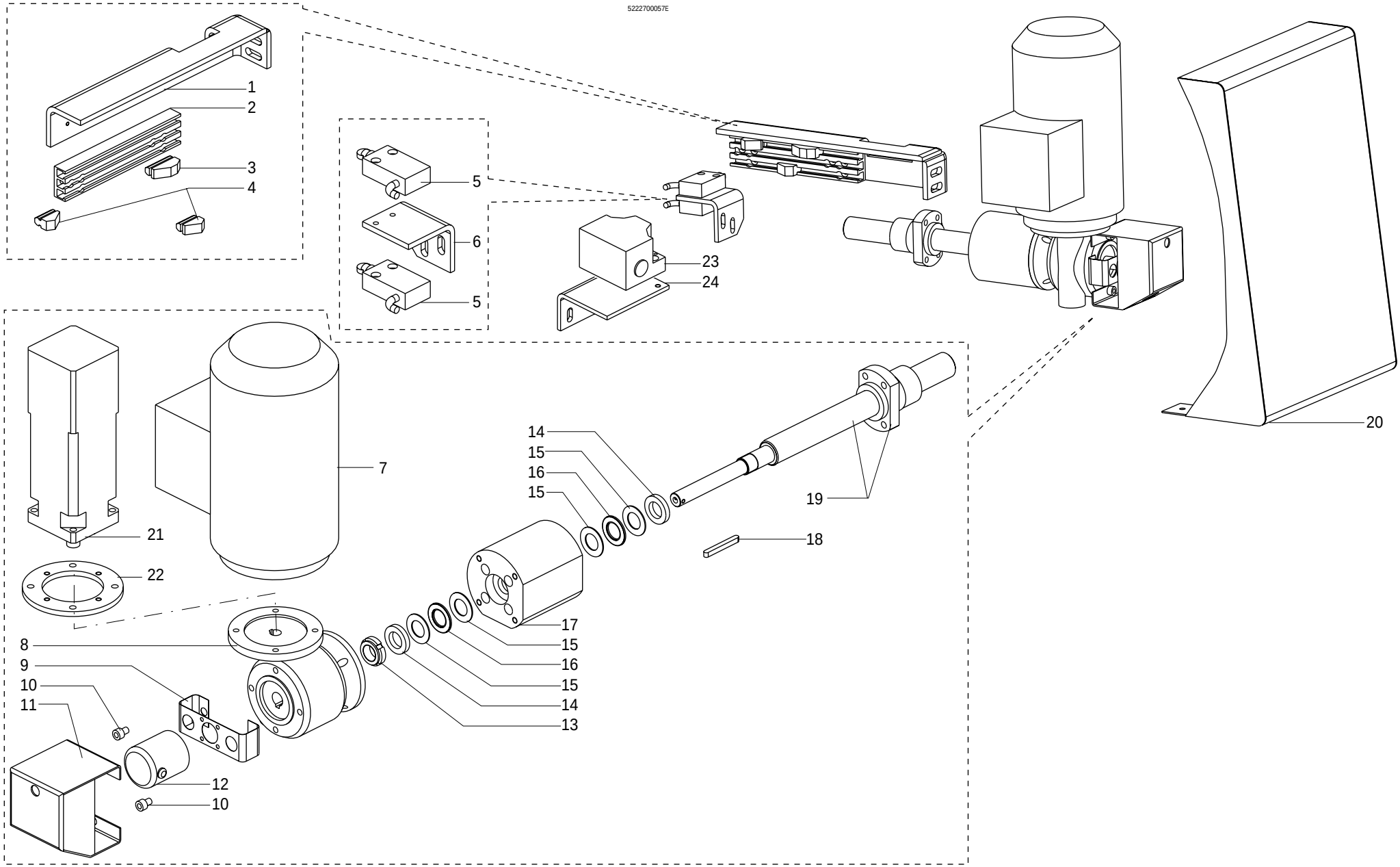


| scm | SUPERSET XL | POSIZIONAMENTO ORIZZONTALE - (01.01.1901 -> - p.20,06,2007)<br>HORIZONTAL ADJUSTMENT - REGLAGE HORIZONTAL<br>HORIZONTALVERSTELLUNG - UBICACION HORIZONTAL | 227-1202-X |
|---|---|---|---|

| N | P | C | CODICE | Q.TY | DENOMINAZIONE | DESCRIPTION | DESIGNATION | BEZEICHNUNG | DENOMINACION |
|---|---|---|---|---|---|---|---|---|---|
| | 01.01.1901 -> 01.01.3000 | | | | Note: 2822731080A | | | | |
| | 1 | | 0000308566C | 1.00 | VITE | SCREW | VIS | SCHRAUBE | TORNILLO |
| | 2 | | 0327430300B | 1.00 | RONDELLA | WASHER | RONDELLE | SCHEIBE | ARANDELA |
| | 3 | | 0316036400C | 1.00 | ANELLO CON DENTATURA D=40 | RING | BAGUE | RING | ANILLO |
| | 3 | | 0516036600B | 1.00 | ANELLO CON DENTATURA D=35 | RING | BAGUE | RING | ANILLO |
| | 3 | | 2739030101B | 1.00 | ANELLO CON DENTATURA | RING | BAGUE | RING | ANILLO |
| | 4 | | 0319433349C | 1.00 | GHIERA | RING NUT | EMBOUT | NUTMUTTER | COLLAR |
| | 4 | | 0319433350D | 1.00 | GHIERA | RING NUT | EMBOUT | NUTMUTTER | COLLAR |
| | 5 | | 0319433348A | 1.00 | ANELLO | RING | BAGUE | RING | ANILLO |
| | 6 | | 0000606139H | 1.00 | CUSCINETTO | BEARING | ROULEMENT | LAGER | COJINETE |
| | 6 | | 0000606170C | 2.00 | CUSCINETTO | BEARING | ROULEMENT | LAGER | COJINETE |
| | 6 | | 0000609068A | 1.00 | CUSCINETTO | BEARING | ROULEMENT | LAGER | COJINETE |
| | 6 | | 0766547299B | 2.00 | CUSCINETTO | BEARING | ROULEMENT | LAGER | COJINETE |
| | 7 | | 0311136025G | 1.00 | ALBERO TOUPIE | SPINDLE | ARBRE | FRAESSPINDEL | EJE |
| | 7 | | 0311136026L | 1.00 | ALBERO TOUPIE | SPINDLE | ARBRE | FRAESSPINDEL | EJE |
| | 7 | | 0311136027B | 1.00 | ALBERO TOUPIE | SPINDLE | ARBRE | FRAESSPINDEL | EJE |
| | 7 | | 0322712003B | 1.00 | ALBERO TOUPIE | SPINDLE | ARBRE | FRAESSPINDEL | EJE |
| | 7 | | 0322712004D | 1.00 | ALBERO TOUPIE | SPINDLE | ARBRE | FRAESSPINDEL | EJE |
| | 7 | | 0322712005F | 1.00 | ALBERO TOUPIE | SPINDLE | ARBRE | FRAESSPINDEL | EJE |
| | 7 | | 0322712006H | 1.00 | ALBERO TOUPIE | SPINDLE | ARBRE | FRAESSPINDEL | EJE |
| | 7 | | 0322712007A | 1.00 | ALBERO TOUPIE | SPINDLE | ARBRE | FRAESSPINDEL | EJE |
| | 7 | | 0322712008C | 1.00 | ALBERO TOUPIE | SPINDLE | ARBRE | FRAESSPINDEL | EJE |
| | 7 | | 0322730021B | 1.00 | ALBERO TOUPIE | SPINDLE | ARBRE | FRAESSPINDEL | EJE |
| | 7 | | 0322730022D | 1.00 | ALBERO TOUPIE | SPINDLE | ARBRE | FRAESSPINDEL | EJE |
| | 7 | | 0322730023F | 1.00 | ALBERO TOUPIE | SPINDLE | ARBRE | FRAESSPINDEL | EJE |
| | 7 | | 0322730024H | 1.00 | ALBERO TOUPIE | SPINDLE | ARBRE | FRAESSPINDEL | EJE |
| | 7 | | 0322730025A | 1.00 | ALBERO TOUPIE D=35 | SPINDLE | ARBRE | FRAESSPINDEL | EJE |
| | 7 | | 0322730027E | 1.00 | ALBERO TOUPIE | SPINDLE | ARBRE | FRAESSPINDEL | EJE |
| | 7 | | 0322730180H | 1.00 | ALBERO TOUPIE | SPINDLE | ARBRE | FRAESSPINDEL | EJE |
| | 7 | | 0322730183E | 1.00 | ALBERO TOUPIE | SPINDLE | ARBRE | FRAESSPINDEL | EJE |
| | 8 | | 0311130800E | 1.00 | CILINDRO | CYLINDER | CYLINDRE | ZYLINDER | CILINDRO |
| | 8 | | 0322711001F | 1.00 | CILINDRO | CYLINDER | CYLINDRE | ZYLINDER | CILINDRO |
| | 8 | | 0322730160F | 1.00 | CILINDRO | CYLINDER | CYLINDRE | ZYLINDER | CILINDRO |
| | 9 | | 0000645169L | 1.00 | LINGUETTA | FEATHER KEY | LANGUETTE | FEDERKEIL | LINGUETA |
| | 10 | | 0000617759G | 6.00 | MOLLA TAZZA | SPRING | RESSORT | TELLERFEDER | RESORTE |
| | 11 | | 0319435570C | 1.00 | DISTANZIALE | SPACER | ENTRETOISE | DISTANZSTUECK | DISTANCIADOR |
| | 12 | | 0000606165C | 1.00 | CUSCINETTO | BEARING | ROULEMENT | LAGER | COJINETE |
| | 12 | | 0000608161F | 1.00 | CUSC.ALTA P. | HIGH PRECISION BEARING | ROULEMENT HAUTE PRECISION | HOCHPRAEZISIONSLAGER | COJ.ALTA PREC. |
| | 12 | | 0766547297G | 1.00 | CUSCINETTO (COPPIA) | BEARING | ROULEMENT | LAGER | COJINETE |
| | 12 | | 0766547298L | 1.00 | CUSCINETTO | BEARING | ROULEMENT | LAGER | COJINETE |

| N | P | C | CODICE | Q.TY | DENOMINAZIONE | DESCRIPTION | DESIGNATION | BEZEICHNUNG | DENOMINACION |
|---|---|---|---|---|---|---|---|---|---|
| | 13 | | 0322730161H | 1.00 | PULEGGIA | PULLEY | POULIE | RIEMENSCHEIBE | POLEA |
| | 14 | | 0311130801G | 1.00 | MADREVITE | NUT SCREW | VIS-MERE | MUTTERGEWINDE | TUERCA |
| | 14 | | 0322730162A | 1.00 | MADREVITE | NUT SCREW | VIS-MERE | MUTTERGEWINDE | TUERCA |
| | 15 | | 0319431142A | 1.00 | RONDELLA | WASHER | RONDELLE | SCHEIBE | ARANDELA |
| | 16 | | 0000308440E | 1.00 | VITE | SCREW | VIS | SCHRAUBE | TORNILLO |
| | 17 | | 0001347322E | 2.00 | CAMMA TCX-00-24 | CAM | CAME | NOCKEN | EXCENTRICO |
| | 18 | | 0001347321C | 1.00 | CAMMA TCX-10-34 | CAM | CAME ACTIONNEMENT | TREIBNOCKEN | EXCENT.ACC. |
| | 19 | | 0322731103G | 1.00 | GUIDA PORTACAMME | CAM HOLDER GUIDE | GUIDE PORTE-CAMES | NOCKENHALTER | GUIA PORTA EXC. |
| | 19 | | 0331919070B | 1.00 | GUIDA PORTACAMME | CAM HOLDER GUIDE | GUIDE PORTE-CAMES | NOCKENHALTER | GUIA PORTA EXC. |
| | 20 | | 0322731027F | 1.00 | PIASTRA | PLATE | PLAQUE | PLATTE | PLANCHA |
| | 21 | | 0322731021C | 1.00 | PIASTRA | PLATE | PLAQUE | PLATTE | PLANCHA |
| | 22 | | 0322732072B | 1.00 | BLOCCAGGIO | LOCKING DEVICE | BLOCAGE | SPERRE | BLOQUEO |
| | 22 | | 0322732073D | 1.00 | BLOCCAGGIO | LOCKING DEVICE | BLOCAGE | SPERRE | BLOQUEO |
| | 22 | | 0322732074F | 1.00 | BLOCCAGGIO | LOCKING DEVICE | BLOCAGE | SPERRE | BLOQUEO |
| | 23 | | 0000308283B | 1.00 | VITE | SCREW | VIS | SCHRAUBE | TORNILLO |
| | 23 | | 0000308408H | 1.00 | VITE | SCREW | VIS | SCHRAUBE | TORNILLO |
| | 24 | | 0000308447A | 1.00 | VITE | SCREW | VIS | SCHRAUBE | TORNILLO |
| | 25 | | 0000301422L | 3.00 | DADO | NUT | ECROU | MUTTER | TUERCA |
| | 26 | | 0322731034A | 1.00 | MADREVITE | NUT SCREW | VIS-MERE | MUTTERGEWINDE | TUERCA |
| | 27 | | 0334042003F | 1.00 | DISTANZIALE | SPACER | ENTRETOISE | DISTANZSTUECK | DISTANCIADOR |
| | 28 | | 0319433356G | 1.00 | ANELLO | RING | BAGUE | RING | ANILLO |
| | 29 | | 0310130421H | 1.00 | GUARNIZIONE | GASKET | GARNITURE | DICHTUNG | JUNTA |
| | 30 | | 0310130420F | 1.00 | PARAPOLVERE | DUST COVER | PARE-POUSSIERE | STAUBDECKEL | PLACA RETENCION POLVO |
| | 31 | | 0519433357D | 2.00 | INGRASSATORE (NIPPLO) | GREASE NIPPLE | NIPPLE | SCHMIERNIPPEL | NIPLE ENGRASADOR |

227-1203

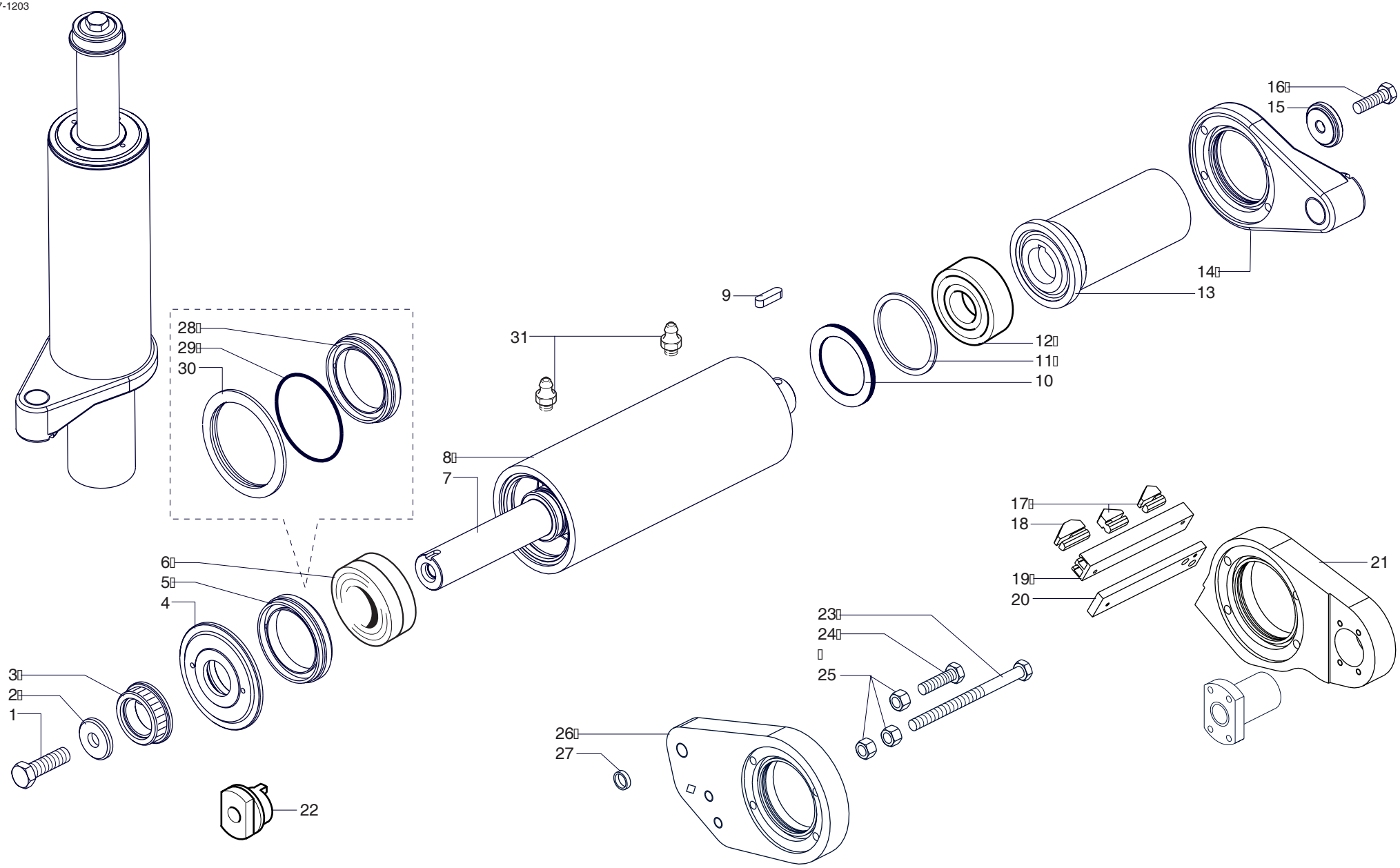


| | | | |
|---|---|---|---|
| scm | SUPERSET XL | ALBERO TOUPIE - (01.01.1901 -> - p.20,06,2007)<br>MOULDING SPINDLE - ARBRE TOUPIE<br>FRAESSPINDEL - EJE TUPI | 227-1203-0 |

| N | P | C | CODICE | Q.TY | DENOMINAZIONE | DESCRIPTION | DESIGNATION | BEZEICHNUNG | DENOMINACION |
|---|---|---|---|---|---|---|---|---|---|
| | 01.01.1901 -> 01.01.3000 | | | | Note: 2822731330B | | | | |
| | 1 | | 0321930305E | 1.00 | BANDIERA MOTORE | SUPPORT | SUPPORT | MOTOR WIPPE | BANDERA |
| | 1 | | 0321930306G | 1.00 | BANDIERA MOTORE | SUPPORT | SUPPORT | MOTOR WIPPE | BANDERA |
| | 2 | | 0321930303A | 1.00 | PERNO | PIN | PIVOT | STIFT | PERNO |
| | 3 | | 0319461185H | 4.00 | DISTANZIALE | SPACER | ENTRETOISE | DISTANZSTUECK | DISTANCIADOR |
| | 4 | | 0000644273H | 1.00 | ANELLO SEEGER | CIRCLIP | CIRCLIP | SEEGERRING | SEEGER |
| | 5 | | 0001314114D | 1.00 | MOTORE TRIF. | 3-PH. MOTOR | 3-PH. MOTEUR | 3-PH. MOTOR | MOT.TRIFAS. |
| | 5 | | 0001314119E | 1.00 | MOTORE TRIF. | 3-PH. MOTOR | 3-PH. MOTEUR | 3-PH. MOTOR | MOT.TRIFAS. |
| | 5 | | 0001314196G | 1.00 | MOTORE TRIF. | 3.PH MOTOR | 3 PH. MOTEUR | 3-PH MOTOR | MOT. TRIFAS |
| | 5 | | 0001314384F | 1.00 | MOTORE TRIF. | 3.PH MOTOR | 3 PH. MOTEUR | 3-PH MOTOR | MOT. TRIFAS |
| | 5 | | 0001315065A | 1.00 | MOTORE TRIF. | 3.PH MOTOR | 3 PH. MOTEUR | 3-PH MOTOR | MOT. TRIFAS |
| | 5 | | 0001315067E | 1.00 | MOTORE TRIF. | 3.PH MOTOR | 3 PH. MOTEUR | 3-PH MOTOR | MOT. TRIFAS |
| | 5 | | 0001315068G | 1.00 | MOTORE TRIF. | 3-PH. MOTORS | 3-PH. MOTEURS | 3-PH. MOTOREN | MOT.TRIFAS. |
| | 5 | | 0001315069L | 1.00 | MOTORE TRIF. | 3-PH. MOTOR | 3-PH. MOTEUR | 3-PH. MOTOR | MOT.TRIFAS. |
| | 5 | | 0001315074L | 1.00 | MOTORE TRIF. | 3.PH MOTOR | 3 PH. MOTEUR | 3-PH MOTOR | MOT. TRIFAS |
| | 5 | | 0001315106H | 1.00 | MOTORE TRIF. | 3.PH MOTOR | 3 PH. MOTEUR | 3-PH MOTOR | MOT. TRIFAS |
| | 5 | | 0001315107A | 1.00 | MOTORE TRIF. | 3.PH MOTOR | 3 PH. MOTEUR | 3-PH MOTOR | MOT. TRIFAS |
| | 5 | | 0001315109E | 1.00 | MOTORE TRIF. | 3-PH. MOTOR | 3-PH. MOTEUR | 3-PH. MOTOR | MOT.TRIFAS. |
| | 5 | | 0001315110F | 1.00 | MOTORE TRIF. | 3-PH. MOTOR | 3-PH. MOTEUR | 3-PH. MOTOR | MOT.TRIFAS. |
| | 5 | | 0001315162F | 1.00 | MOTORE TRIF. | 3.PH MOTOR | 3 PH. MOTEUR | 3-PH MOTOR | MOT. TRIFAS |
| | 5 | | 0001315195F | 1.00 | MOTORE TRIF. | 3.PH MOTOR | 3 PH. MOTEUR | 3-PH MOTOR | MOT. TRIFAS |
| | 5 | | 0001315199E | 1.00 | MOTORE TRIF. | 3.PH MOTOR | 3 PH. MOTEUR | 3-PH MOTOR | MOT. TRIFAS |
| | 5 | | 0001315224H | 1.00 | MOTORE TRIF. | 3.PH MOTOR | 3 PH. MOTEUR | 3-PH MOTOR | MOT. TRIFAS |
| | 5 | | 0001331049G | 1.00 | MOTORE TRIF. FRENO C.C. | 3-PH. MOTOR D.C. BRAKE | MOTEUR 3-PH . FREIN C.C | 3-PH. MOTOR G.S. BREMSE | MOT. TRIFAS. FR. C.C. |
| | 5 | | 0001331056B | 1.00 | MOTORE TRIF. FRENO C.C. | 3-PH. MOTOR C.C. BRAKE | 3-PH. MOTEUR FREIN C.C. | 3-PH. MOTOR C.C. BREMSE | MOT.TRIFAS.FR.C.C. |
| | 5 | | 0001331059H | 1.00 | MOTORE TRIF. FRENO C.C. | 3-PH. MOTOR C.C. BRAKE | 3-PH. MOTEUR FREIN C.C. | 3-PH. MOTOR C.C. BREMSE | MOT.TRIFAS.FR.C.C. |
| | 5 | | 0001331088L | 1.00 | MOTORE TRIF. FRENO C.C. | 3-PH. MOTOR C.C. BRAKE | 3-PH. MOTEUR FREIN C.C. | 3-PH. MOTOR C.C. BREMSE | MOT.TRIFAS.FR.C.C. |
| | 5 | | 0001331137D | 1.00 | MOTORE TRIF. FRENO C.C. | 3-PH. MOTOR D.C. BRAKE | MOTEUR 3-PH . FREIN C.C | 3-PH. MOTOR G.S. BREMSE | MOT. TRIFAS. FR. C.C. |
| | 5 | | 0001331153G | 1.00 | MOTORE TRIF. FRENO C.C. | 3-PH. MOTOR D.C. BRAKE | 3-PH. MOTEUR FREIN C.C. | 3-PH. MOTOR G.S. BREMSE | MOT.TRIFAS.FR.C.C. |
| | 5 | | 0001331156D | 1.00 | MOTORE TRIF. FRENO C.C. | 3-PH. MOTOR D.C. BRAKE | MOTEUR 3-PH . FREIN C.C | 3-PH. MOTOR G.S. BREMSE | MOT. TRIFAS. FR. C.C. |
| | 5 | | 0001331157F | 1.00 | MOTORE TRIF. FRENO C.C. | 3-PH. MOTOR D.C. BRAKE | MOTEUR 3-PH . FREIN C.C | 3-PH. MOTOR G.S. BREMSE | MOT. TRIFAS. FR. C.C. |
| | 5 | | 0001331158H | 1.00 | MOTORE TRIF. FRENO C.C. | 3-PH. MOTOR D.C. BRAKE | MOTEUR 3-PH . FREIN C.C | 3-PH. MOTOR G.S. BREMSE | MOT. TRIFAS. FR. C.C. |
| | 5 | | 0001331204F | 1.00 | MOTORE TRIF. FRENO C.C. | 3-PH. MOTOR D.C. BRAKE | MOTEUR 3-PH . FREIN C.C | 3-PH. MOTOR G.S. BREMSE | MOT. TRIFAS. FR. C.C. |
| | 5 | | 0001331207C | 1.00 | MOTORE TRIF. FRENO C.C. | 3-PH. MOTOR D.C. BRAKE | MOTEUR 3-PH . FREIN C.C | 3-PH. MOTOR G.S. BREMSE | MOT. TRIFAS. FR. C.C. |
| | 5 | | 0001331209G | 1.00 | MOTORE TRIF. FRENO C.C. | 3-PH. MOTOR D.C. BRAKE | MOTEUR 3-PH . FREIN C.C | 3-PH. MOTOR G.S. BREMSE | MOT. TRIFAS. FR. C.C. |
| | 5 | | 0001331211A | 1.00 | MOTORE TRIF. FRENO C.C. | 3-PH. MOTOR D.C. BRAKE | MOTEUR 3-PH . FREIN C.C | 3-PH. MOTOR G.S. BREMSE | MOT. TRIFAS. FR. C.C. |
| | 5 | | 0001331212C | 1.00 | MOTORE TRIF. FRENO C.C. | 3-PH. MOTOR D.C. BRAKE | MOTEUR 3-PH . FREIN C.C | 3-PH. MOTOR G.S. BREMSE | MOT. TRIFAS. FR. C.C. |
| | 5 | | 0001331223F | 1.00 | MOTORE TRIF. FRENO C.C. | 3-PH. MOTOR D.C. BRAKE | MOTEUR 3-PH . FREIN C.C | 3-PH. MOTOR G.S. BREMSE | MOT. TRIFAS. FR. C.C. |
| | 5 | | 0001331226C | 1.00 | MOTORE TRIF. FRENO C.C. | 3-PH. MOTOR D.C. BRAKE | MOTEUR 3-PH . FREIN C.C | 3-PH. MOTOR G.S. BREMSE | MOT. TRIFAS. FR. C.C. |
| | 5 | | 0001331227E | 1.00 | MOTORE TRIF. FRENO C.C. | 3-PH. MOTOR D.C. BRAKE | MOTEUR 3-PH . FREIN C.C | 3-PH. MOTOR G.S. BREMSE | MOT. TRIFAS. FR. C.C. |

| N | P | C | CODICE | Q.TY | DENOMINAZIONE | DESCRIPTION | DESIGNATION | BEZEICHNUNG | DENOMINACION |
|---|---|---|---|---|---|---|---|---|---|
| | 5 | | 0001331228G | 1.00 | MOTORE TRIF. FRENO C.C. | 3-PH. MOTOR D.C. BRAKE | MOTEUR 3-PH . FREIN C.C | 3-PH. MOTOR G.S. BREMSE | MOT. TRIFAS. FR. C.C. |
| | 5 | | 0001331229L | 1.00 | MOTORE TRIF. FRENO C.C. | 3-PH. MOTOR C.C. BRAKE | 3-PH. MOTEUR FREIN C.C. | 3-PH. MOTOR C.C. BREMSE | MOT.TRIFAS.FR.C.C. |
| | 5 | | 0001331238H | 1.00 | MOTORE TRIF. FRENO C.C. | 3-PH. MOTOR D.C. BRAKE | MOTEUR 3-PH . FREIN C.C | 3-PH. MOTOR G.S. BREMSE | MOT. TRIFAS. FR. C.C. |
| | 5 | | 0001331242F | 1.00 | MOTORE TRIF. FRENO C.C. | 3-PH. MOTOR D.C. BRAKE | MOTEUR 3-PH . FREIN C.C | 3-PH. MOTOR G.S. BREMSE | MOT. TRIFAS. FR. C.C. |
| | 5 | | 0001331243H | 1.00 | MOTORE TRIF. FRENO C.C. | 3-PH. MOTOR D.C. BRAKE | MOTEUR 3-PH . FREIN C.C | 3-PH. MOTOR G.S. BREMSE | MOT. TRIFAS. FR. C.C. |
| | 5 | | 0001331244A | 1.00 | MOTORE TRIF. FRENO C.C. | 3-PH. MOTOR D.C. BRAKE | MOTEUR 3-PH . FREIN C.C | 3-PH. MOTOR G.S. BREMSE | MOT. TRIFAS. FR. C.C. |
| | 5 | | 0001331554H | 1.00 | MOTORE TRIF. FRENO C.C. | 3-PH. MOTOR D.C. BRAKE | MOTEUR 3-PH . FREIN C.C | 3-PH. MOTOR G.S. BREMSE | MOT. TRIFAS. FR. C.C. |
| | 5 | | 0001331555A | 1.00 | MOTORE TRIF. FRENO C.C. | 3-PH. MOTOR D.C. BRAKE | MOTEUR 3-PH . FREIN C.C | 3-PH. MOTOR G.S. BREMSE | MOT. TRIFAS. FR. C.C. |
| | 5 | | 0001331556C | 1.00 | MOTORE TRIF. FRENO C.C. | 3-PH. MOTOR D.C. BRAKE | MOTEUR 3-PH . FREIN C.C | 3-PH. MOTOR G.S. BREMSE | MOT. TRIFAS. FR. C.C. |
| | 5 | | 0001334193E | 1.00 | MOTORE TRIF. | 3.PH MOTOR | 3 PH. MOTEUR | 3-PH MOTOR | MOT. TRIFAS |
| | 5 | | 0001334195L | 1.00 | MOTORE TRIF. | 3.PH MOTOR | 3 PH. MOTEUR | 3-PH MOTOR | MOT. TRIFAS |
| | 5 | | 0001334199H | 1.00 | MOTORE TRIF. | 3.PH MOTOR | 3 PH. MOTEUR | 3-PH MOTOR | MOT. TRIFAS |
| | 5 | | 0001337670A | 1.00 | MOTORE TRIF. | 3.PH MOTOR | 3 PH. MOTEUR | 3-PH MOTOR | MOT. TRIFAS |
| | 5 | | 0001337721L | 1.00 | MOTORE TRIF. | 3.PH MOTOR | 3 PH. MOTEUR | 3-PH MOTOR | MOT. TRIFAS |
| | 5 | | 0001337722B | 1.00 | MOTORE TRIF. | 3.PH MOTOR | 3 PH. MOTEUR | 3-PH MOTOR | MOT. TRIFAS |
| | 5 | | 0001337727C | 1.00 | MOTORE TRIF. | 3.PH MOTOR | 3 PH. MOTEUR | 3-PH MOTOR | MOT. TRIFAS |
| | 5 | | 0001337728E | 1.00 | MOTORE TRIF. | 3.PH MOTOR | 3 PH. MOTEUR | 3-PH MOTOR | MOT. TRIFAS |
| | 5 | | 0001337730H | 1.00 | MOTORE TRIF. FRENO C.C. | 3-PH. MOTOR D.C. BRAKE | MOTEUR 3-PH . FREIN C.C | 3-PH. MOTOR G.S. BREMSE | MOT. TRIFAS. FR. C.C. |
| | 5 | | 0001337738F | 1.00 | MOTORE TRIF. | 3.PH MOTOR | 3 PH. MOTEUR | 3-PH MOTOR | MOT. TRIFAS |
| | 5 | | 0001337739H | 1.00 | MOTORE TRIF. | 3.PH MOTOR | 3 PH. MOTEUR | 3-PH MOTOR | MOT. TRIFAS |
| | 5 | | 0001337757F | 1.00 | MOTORE TRIF. FRENO C.C. | 3-PH. MOTOR D.C. BRAKE | MOTEUR 3-PH . FREIN C.C | 3-PH. MOTOR G.S. BREMSE | MOT. TRIFAS. FR. C.C. |
| | 5 | | 0001337758H | 1.00 | MOTORE TRIF. FRENO C.C. | 3-PH. MOTOR D.C. BRAKE | MOTEUR 3-PH . FREIN C.C | 3-PH. MOTOR G.S. BREMSE | MOT. TRIFAS. FR. C.C. |
| | 5 | | 0001337759A | 1.00 | MOTORE TRIF. FRENO C.C. | 3-PH. MOTOR D.C. BRAKE | MOTEUR 3-PH . FREIN C.C | 3-PH. MOTOR G.S. BREMSE | MOT. TRIFAS. FR. C.C. |
| | 5 | | 0001337760B | 1.00 | MOTORE TRIF. FRENO C.C. | 3-PH. MOTOR D.C. BRAKE | MOTEUR 3-PH . FREIN C.C | 3-PH. MOTOR G.S. BREMSE | MOT. TRIFAS. FR. C.C. |
| | 5 | | 0001337763H | 1.00 | MOTORE TRIF. FRENO C.C. | 3-PH. MOTOR D.C. BRAKE | MOTEUR 3-PH . FREIN C.C | 3-PH. MOTOR G.S. BREMSE | MOT. TRIFAS. FR. C.C. |
| | 5 | | 0001337764A | 1.00 | MOTORE TRIF. FRENO C.C. | 3-PH. MOTOR D.C. BRAKE | MOTEUR 3-PH . FREIN C.C | 3-PH. MOTOR G.S. BREMSE | MOT. TRIFAS. FR. C.C. |
| | 5 | | 0001337793B | 1.00 | MOTORE TRIF. FRENO C.C. | 3-PH. MOTOR D.C. BRAKE | MOTEUR 3-PH . FREIN C.C | 3-PH. MOTOR G.S. BREMSE | MOT. TRIFAS. FR. C.C. |
| | 5 | | 0001337793B | 1.00 | MOTORE TRIF. FRENO C.C. | 3-PH. MOTOR D.C. BRAKE | MOTEUR 3-PH . FREIN C.C | 3-PH. MOTOR G.S. BREMSE | MOT. TRIFAS. FR. C.C. |
| | 5 | | 0001337805H | 1.00 | MOTORE TRIF. | 3.PH MOTOR | 3 PH. MOTEUR | 3-PH MOTOR | MOT. TRIFAS |
| | 5 | | 0001337806A | 1.00 | MOTORE TRIF. | 3.PH MOTOR | 3 PH. MOTEUR | 3-PH MOTOR | MOT. TRIFAS |
| | 5 | | 0001337808E | 1.00 | MOTORE TRIF. FRENO C.C. | 3-PH. MOTOR D.C. BRAKE | MOTEUR 3-PH . FREIN C.C | 3-PH. MOTOR G.S. BREMSE | MOT. TRIFAS. FR. C.C. |
| | 5 | | 0001337809G | 1.00 | MOTORE TRIF. FRENO C.C. | 3-PH. MOTOR D.C. BRAKE | MOTEUR 3-PH . FREIN C.C | 3-PH. MOTOR G.S. BREMSE | MOT. TRIFAS. FR. C.C. |
| | 5 | | 0001337814G | 1.00 | MOTORE TRIF. | 3.PH MOTOR | 3 PH. MOTEUR | 3-PH MOTOR | MOT. TRIFAS |
| | 5 | | 0001337816B | 1.00 | MOTORE TRIF. | 3.PH MOTOR | 3 PH. MOTEUR | 3-PH MOTOR | MOT. TRIFAS |
| | 5 | | 0001337817D | 1.00 | MOTORE TRIF. | 3.PH MOTOR | 3 PH. MOTEUR | 3-PH MOTOR | MOT. TRIFAS |
| | 5 | | 0001337818F | 1.00 | MOTORE TRIF. | 3.PH MOTOR | 3 PH. MOTEUR | 3-PH MOTOR | MOT. TRIFAS |
| | 5 | | 0001341093B | 1.00 | MOTORE TRIF. | 3.PH. MOTOR | 3 PH. MOTEUR | 3-DREIPHASENMOTOR | MOT. TRIFAS |
| | 6 | | 0000604046H | 1.00 | CINGHIA | BELT | COURROIE | RIEMEN | CORREA |
| | 6 | | 0000604057B | 1.00 | CINGHIA | BELT | COURROIE | RIEMEN | CORREA |
| | 6 | | 0000605363B | 1.00 | CINGHIA PIATTA | FLAT BELT | COURROIE PLATE | FLACHRIEMEN | CORREA PLANA |

| N | P | C | CODICE | Q.TY | DENOMINAZIONE | DESCRIPTION | DESIGNATION | BEZEICHNUNG | DENOMINACION |
|---|---|---|---|---|---|---|---|---|---|
| | 6 | | 0000605368C | 1.00 | CINGHIA PIATTA | FLAT BELT | COURROIE PLATE | FLACHRIEMEN | CORREA PLANA |
| | 7 | | 0319431161A | 1.00 | PULEGGIA | PULLEY | POULIE | RIEMENSCHEIBE | POLEA |
| | 7 | | 0319431162C | 1.00 | PULEGGIA | PULLEY | POULIE | RIEMENSCHEIBE | POLEA |
| | 7 | | 0319431163E | 1.00 | PULEGGIA | PULLEY | POULIE | RIEMENSCHEIBE | POLEA |
| | 7 | | 0319431164G | 1.00 | PULEGGIA | PULLEY | POULIE | RIEMENSCHEIBE | POLEA |
| | 7 | | 0319431166B | 1.00 | PULEGGIA | PULLEY | POULIE | RIEMENSCHEIBE | POLEA |
| | 7 | | 0319431167D | 1.00 | PULEGGIA | PULLEY | POULIE | RIEMENSCHEIBE | POLEA |
| | 7 | | 0319431168F | 1.00 | PULEGGIA | PULLEY | POULIE | RIEMENSCHEIBE | POLEA |
| | 7 | | 0319431169H | 1.00 | PULEGGIA | PULLEY | POULIE | RIEMENSCHEIBE | POLEA |
| | 8 | | 0000305249G | 1.00 | RONDELLA | WASHER | RONDELLE | SCHEIBE | ARANDELA |
| | 8 | | 0319431135F | 1.00 | RONDELLA | WASHER | RONDELLE | SCHEIBE | ARANDELA |
| | 9 | | 0000310246G | 1.00 | VITE | SCREW | VIS | SCHRAUBE | TORNILLO |
| | 9 | | 0000310363E | 1.00 | VITE | SCREW | VIS | SCHRAUBE | TORNILLO |
| | 10 | | 0001352751B | 1.00 | INVERTER | INVERTER | INVERSEUR | WECHSELRICHTER | INVERTER |

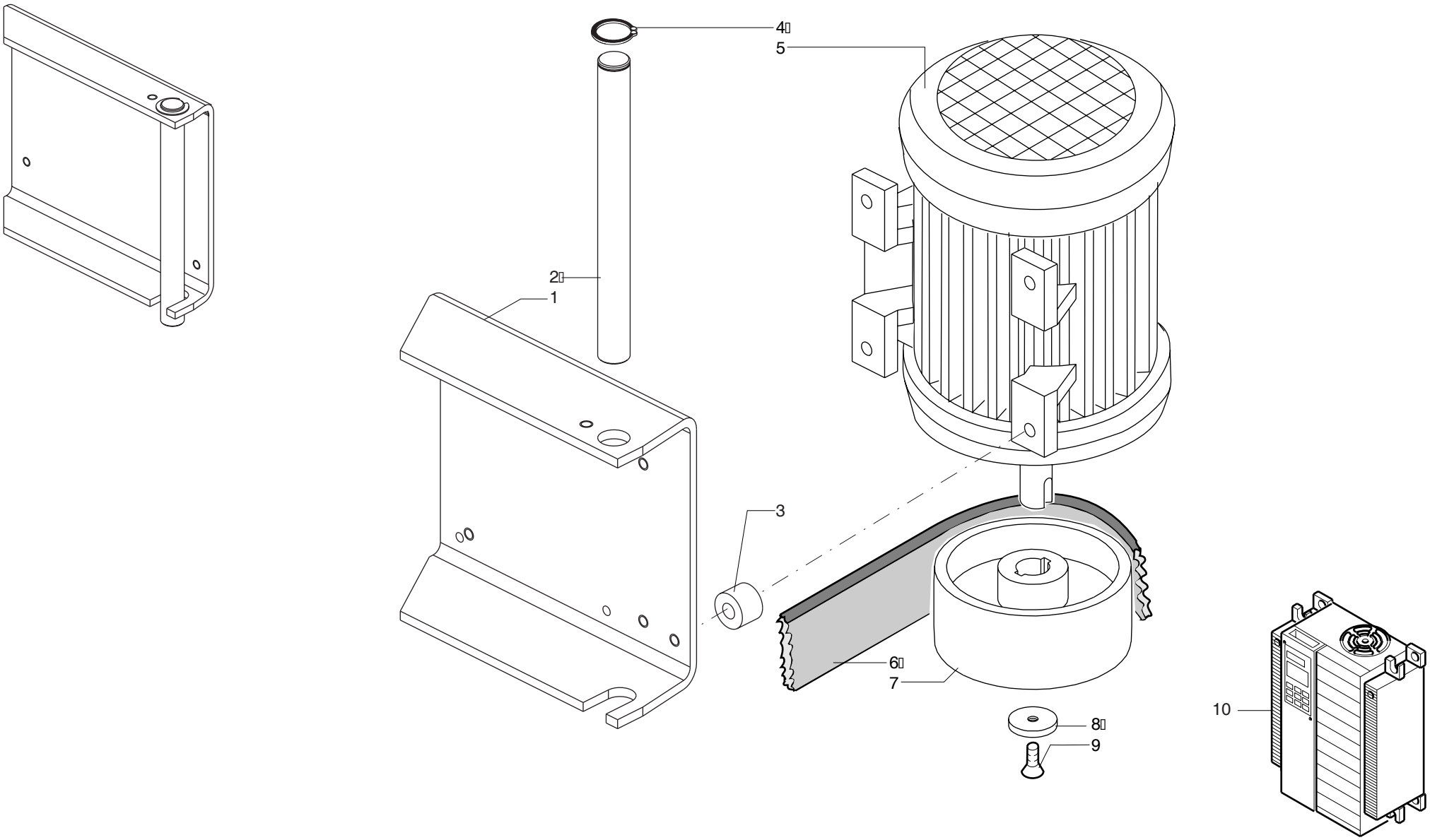


| | | | |
|---|---|---|---|
| scm | SUPERSET XL | MOTORIZZAZIONE - (01.01.1901 -> - p.20,06,2007)<br>MOTORIZATION - MOTORISATION<br>MOTORISIERUNG - MOTORIZACION | 227-1204-0 |

| N | P | C | CODICE | Q.TY | DENOMINAZIONE | DESCRIPTION | DESIGNATION | BEZEICHNUNG | DENOMINACION |
|---|---|---|---|---|---|---|---|---|---|
| | 01.01.1901 -> 01.01.3000 | | | | Note: 2822730140G | | | | |
| | 1 | | 0000613033B | 2.00 | GABBIA A RULLINI | ROLLER CAGE | CAGE A ROULEAUX | WALZENKAEFIG | COJINETE |
| | 2 | | 0000613034D | 4.00 | RALLA | WASHER | CRAPAUDINE | SCHEIBE | RANGUA |
| | 3 | | 0316030500H | 1.00 | BOCCOLA | BUSHING | DOUILLE | BUCHSE | CASQUILLO |
| | 4 | | 0310130604G | 1.00 | SCATOLA DI RINVIO | TRANSFER CASE | BOITE | VORGELEGEKASTEN | CAJA |
| | 5 | | 0319430904G | 1.00 | CORONA DENTATA | GEAR WHEEL | COURONNE DENTEE | ZAHNRAD | RUEDA DENTADA |
| | 6 | | 0322730141F | 1.00 | VITE | SCREW | VIS | SCHRAUBE | TORNILLO |
| | 7 | | 0000645045F | 1.00 | LINGUETTA | FEATHER KEY | LANGUETTE | FEDERKEIL | LINGUETA |
| | 8 | | 0316030800E | 1.00 | VITE SENZA FINE | WORM | VIS SANS FIN | SCHNECKE | TORNILO SIN FIN |
| | 8 | | 0322790313E | 1.00 | VITE SENZA FINE | WORM | VIS SANS FIN | SCHNECKE | TORNILO SIN FIN |
| | 9 | | 0000606100E | 1.00 | CUSCINETTO | BEARING | ROULEMENT | LAGER | COJINETE |
| | 10 | | 0316031000H | 1.00 | DISTANZIALE | SPACER | ENTRETOISE | DISTANZSTUECK | DISTANCIADOR |
| | 11 | | 0000644043A | 1.00 | ANELLO SEEGER | CIRCLIP | CIRCLIP | SEEGERRING | SEEGER |
| | 12 | | 0000644268H | 1.00 | ANELLO SEEGER | CIRCLIP | CIRCLIP | SEEGERRING | SEEGER |
| | 13 | | 0722732012D | 1.00 | VITE+CHIOC.RIC | SCREW + LEAD NUT | VIS + ECROU (DESSIN) | SCHNECKE +MUTTER (ZEICHN. | TORN+TUER A DIBUJO |

227-1205

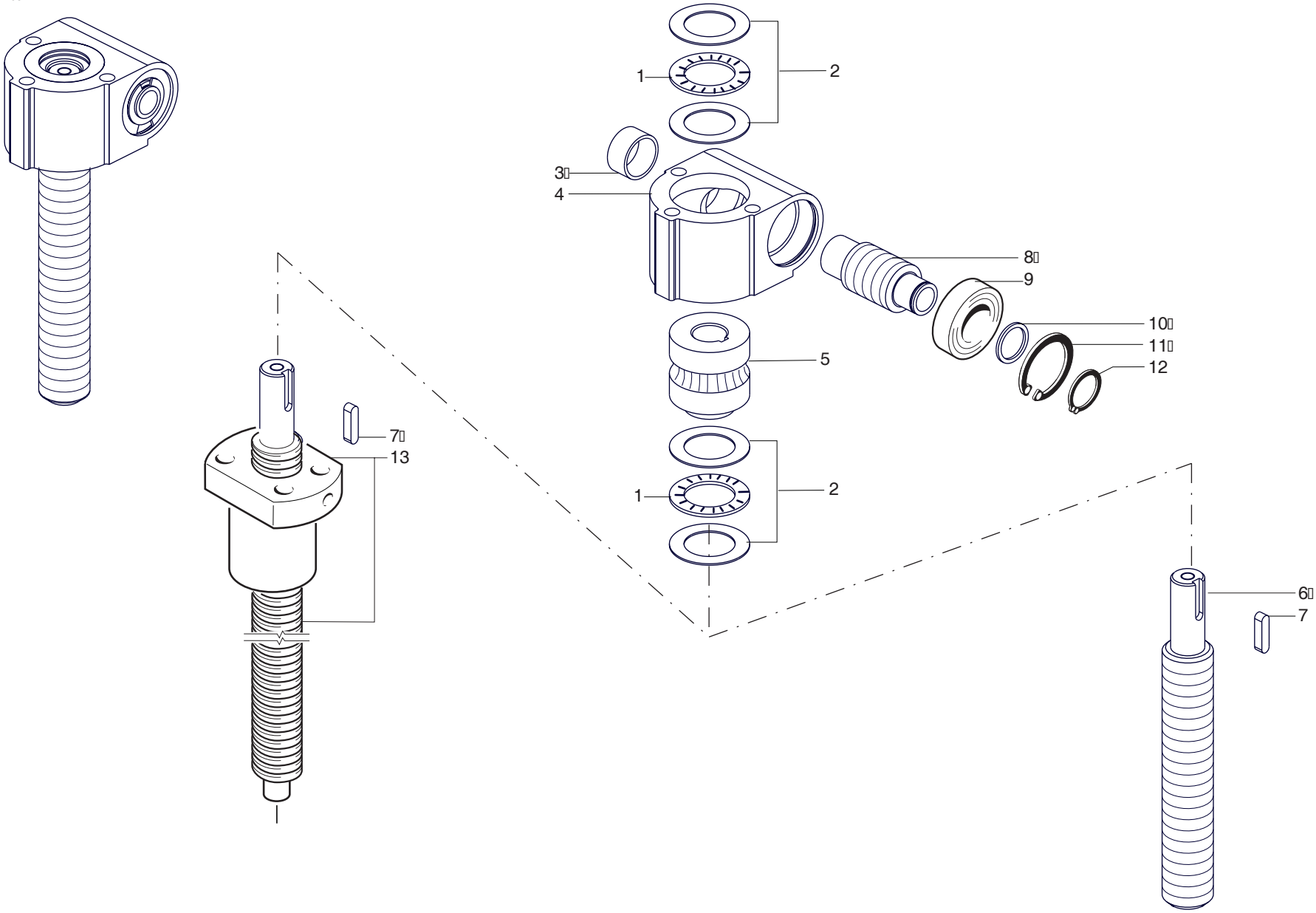


| | | | |
|---|---|---|---|
| scm | SUPERSET XL | POSIZIONAMENTO VERTICALE - (01.01.1901 -> - p.20,06,2007)<br>VERTICAL ADJUSTMENT - REGLAGE VERTICAL<br>VERTIKALVERSTELLUNG - UBICATION VERTICAL | 227-1205-0 |

| N | P | C | CODICE | Q.TY | DENOMINAZIONE | DESCRIPTION | DESIGNATION | BEZEICHNUNG | DENOMINACION |
|---|---|---|---|---|---|---|---|---|---|
| | 01.01.1901 -> 01.01.3000 | | | | Note: 2822731120F | | | | |
| | 1 | | 0000635035C | 1.00 | INDICATORE NUMERICO | INDICATOR | INDICATEUR | ANZEIGER | INDICADOR NUMERICO |
| | 1 | | 0000635137L | 1.00 | INDICATORE NUMERICO | INDICATOR | INDICATEUR | ANZEIGER | INDICADOR NUMERICO |
| | 1 | | 0766580007D | 1.00 | INDICATORE NUMERICO LIKA | INDICATOR | INDICATEUR | ANZEIGER | INDICADOR NUMERICO |
| | 2 | | 0522730170B | 1.00 | FLANGIA | FLANGE | FLASQUE | FLANSCH | BRIDA |
| | 3 | | 0000613041H | 2.00 | GABBIA A RULLINI | ROLLER CAGE | CAGE A ROULEAUX | WALZENKAEFIG | COJINETE |
| | 4 | | 0316330020C | 1.00 | RONDELLA | WASHER | RONDELLE | SCHEIBE | ARANDELA |
| | 5 | | 0000613045G | 4.00 | RALLA | WASHER | CRAPAUDINE | SCHEIBE | RANGUA |
| | 6 | | 0322730171L | 1.00 | BOCCOLA | BUSHING | DOUILLE | BUCHSE | CASQUILLO |
| | 7 | | 0511136902C | 1.00 | BARRA | BAR | BARRE | STANGE | BARRA |
| | 7 | | 0522731111H | 1.00 | BARRA | BAR | BARRE | STANGE | BARRA |
| | 8 | | 0322775010C | 1.00 | TARGA | PLATE | PLAQUE | SCHILD | TARJETA |
| | 9 | | 0319013512L | 1.00 | POMELLO | BALL GRIP | POIGNEE | KUGELGRIFF | POMO |
| | 10 | | 0322775031G | 1.00 | TARGA | RATING PLATE | PLAQUE | SCHILD | TARJETA |

227-1206

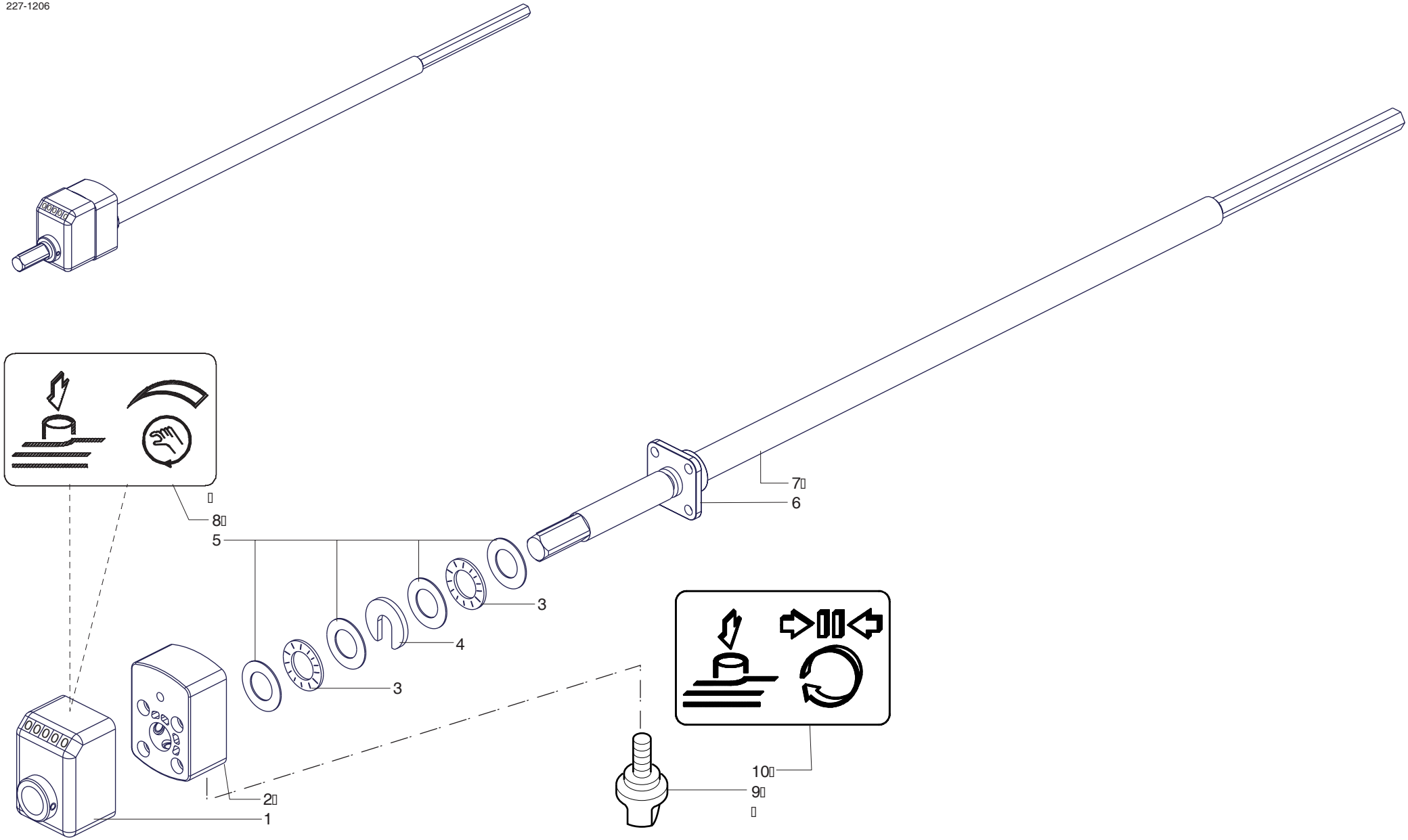


| | | | |
|---|---|---|---|
| scm | SUPERSET XL | POSIZIONAMENTO VERTICALE MANUALE - (01.01.1901 ->  - p.20,06,2007)<br>MANUAL VERTICAL ADJUSTMENT - REGLAGE VERTICAL MANUEL<br>MANUELLE VERTIKALVERSTELLUNG - UBICACION VERTICAL MANUAL | 227-1206-0 |

| N | P | C | CODICE | Q.TY | DENOMINAZIONE | DESCRIPTION | DESIGNATION | BEZEICHNUNG | DENOMINACION |
|---|---|---|---|---|---|---|---|---|---|
| | 01.01.1901 -> 01.01.3000 | | | | Note: 2822730205F | | | | |
| | 1 | | 0322730167B | 1.00 | QUADRO | BOARD | PANNEAU | TAFEL | CUADRO |
| | 2 | | 0322730129B | 1.00 | PERNO | PIN | PIVOT | BOLZEN | PERNO |
| | 3 | | 0000305245H | 1.00 | ROSETTA | WASHER | RONDELLE | SCHEIBE | ARANDELA |
| | 4 | | 0719412601A | 1.00 | MANIGLIA | HANDLE | POIGNEE | HANDGRIFF | MANIJA |
| | 5 | | 0322730171L | 1.00 | BOCCOLA | BUSHING | DOUILLE | BUCHSE | CASQUILLO |
| | 6 | | 1416330018C | 1.00 | FLANGIA | FLANGE | FLASQUE | FLANSCH | ANILLO |

227-1207

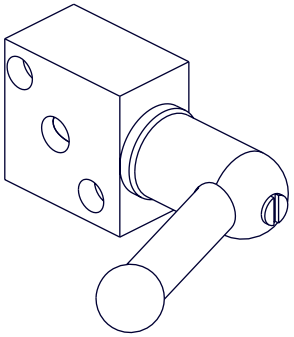

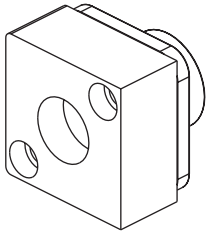

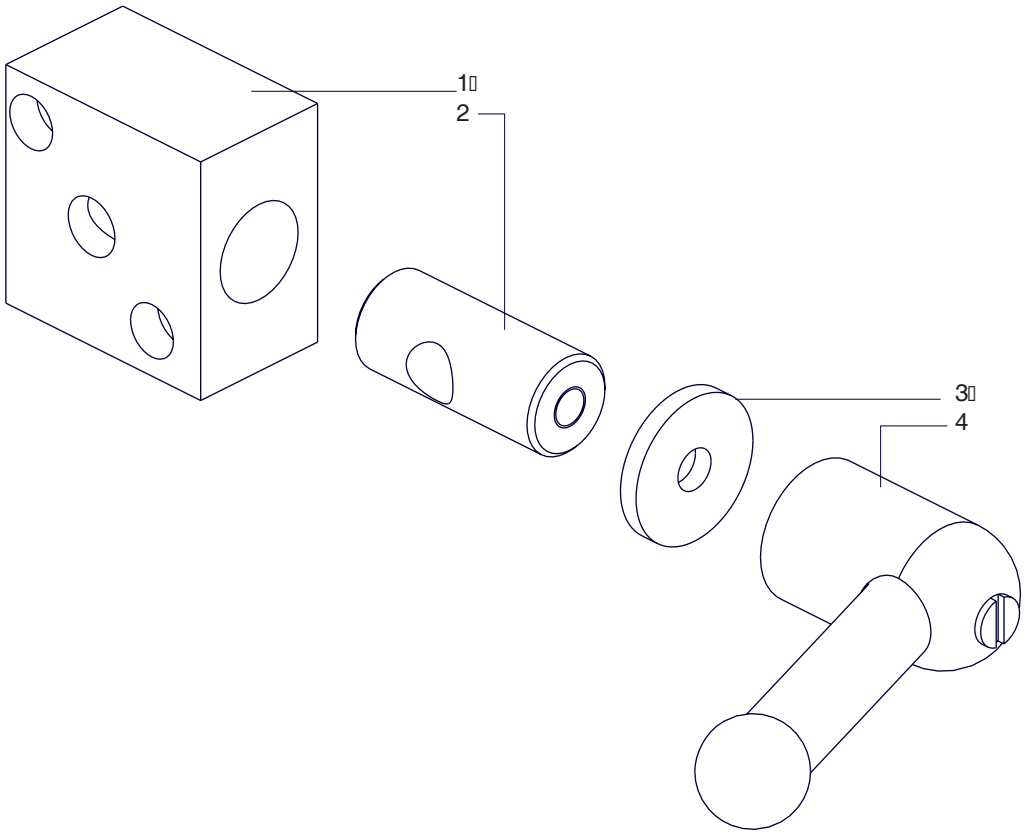


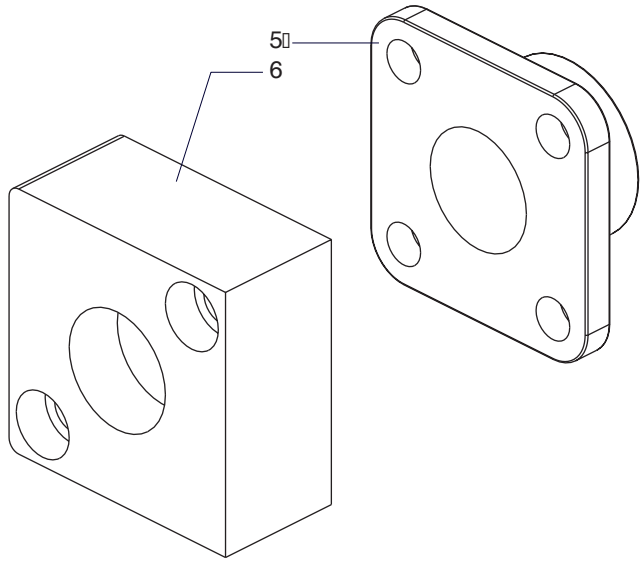


| | | | |
|---|---|---|---|
| scm | SUPERSET XL | BLOCCAGGIO - (01.01.1901 -> - p.20,06,2007)<br>SHAFT CLAMPING UNIT - GROUPE SERRAGE ARBRE<br>SPINDELBLOCKIERUNG - BLOQUED | 227-1207-0 |

| scm | SUPERSET XL | CUFFIA D'ASPIRAZIONE - (p.20,06,2007)<br>SUCTION HOOD - HOTTE D'ASPIRATION<br>ABSAUGHAUBE - CAMPANA DE ASPIRACION | 227-1208-0 |
|---|---|---|---|

| N | P | C | CODICE | Q.TY | DENOMINAZIONE | DESCRIPTION | DESIGNATION | BEZEICHNUNG | DENOMINACION |
|---|---|---|---|---|---|---|---|---|---|
| | 01.01.1901 -> 01.01.3000 | | | | Note: 2822731210G | | | | |
| | 1 | | 0319012710H | 2.00 | POMOLO | KNOB | POIGNEE | KUGELGRIFF | POMEL |
| | 1 | | 0319014002H | 2.00 | POMELLO | BALL GRIP | GRIFFE | KUGELGRIFF | POMO |
| | 2 | | 0522731215L | 1.00 | COPERCHIO | COVER | COUVERCLE | DECKEL | TAPA |
| | 3 | | 0322731212H | 1.00 | COPERCHIO | COVER | COUVERCLE | DECKEL | TAPA |
| | 4 | | 0000309118D | 2.00 | VITE | SCREW | VIS | SCHRAUBE | TORNILLO |
| | 5 | | 0522731211A | 1.00 | CUFFIA V.D. | HOOD | HOTTE | HAUBE | CAMPANA V.D. |
| | 6 | | 0322731214C | 1.00 | RIGHETTA | RULE | REGLETTE | SCHIENE | REGLA |
| | 7 | | 0322731213A | 1.00 | PROTEZIONE | GUARD | PROTECTION | ABDECKUNG | PROTECCION |
| | 8 | | 0321910790H | 1.00 | TARGA | PLATE | PLAQUE | SCHILD | TARJETA |
| | 8 | | 0321910818L | 1.00 | TARGA 7000 | RATING PLATE | PLAQUE | SCHILD | TARJETA |
| | 9 | | 0321910793E | 1.00 | TARGA | PLATE | PLAQUE | SCHILD | TARJETA |
| | 10 | | 0302110049H | 1.00 | TARGA | PLATE | PLAQUE | SCHILD | TARJETA |
| | 11 | | 0302110069A | 1.00 | TARGA | PLATE | PLAQUE | SCHILD | TARJETA |
| | 12 | | 0311130810F | 1.00 | RIGHETTA | RULE | REGLETTE | SCHIENE | REGLA |

227-1208

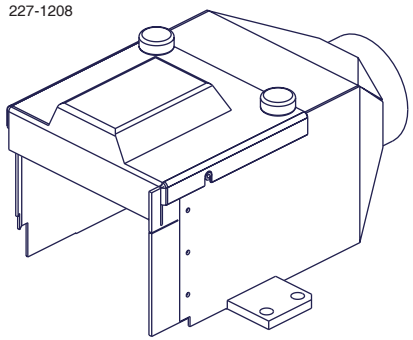

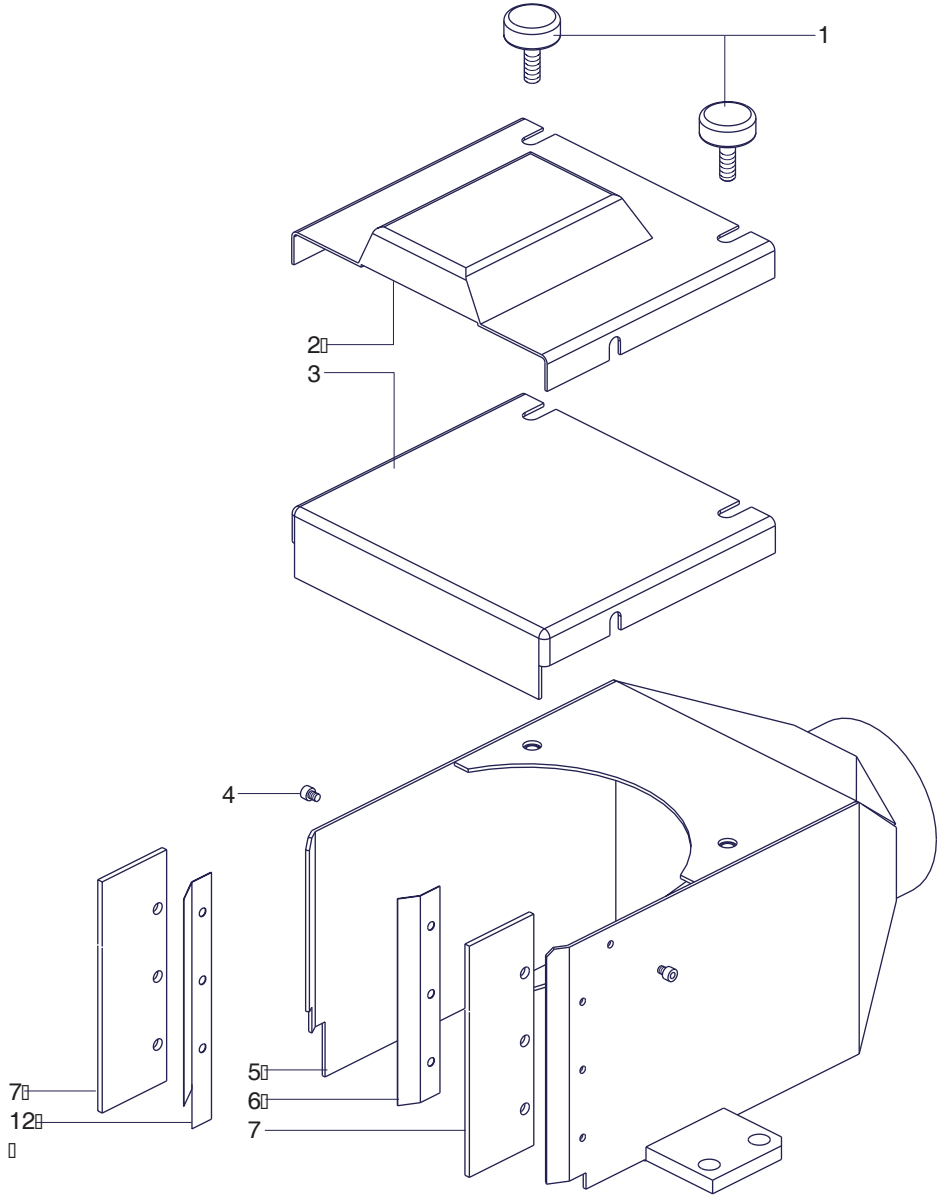




10

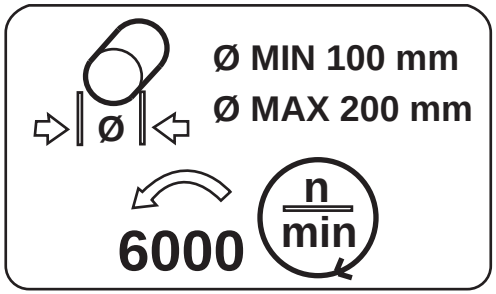


8

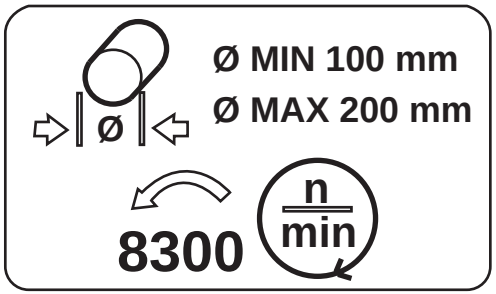


9




11

| | | | |
|---|---|---|---|
| scm | SUPERSET XL | CUFFIA D'ASPIRAZIONE - (01.01.1901 -> - p.20,06,2007)<br>SUCTION HOOD - HOTTE D'ASPIRATION<br>ABSAUGHAUBE - CAMPANA DE ASPIRACION | 227-1208-0 |

| scm | SUPERSET XL | POSIZIONAMENTO VERTICALE - (p.20,06,2007)<br>VERTICAL ADJUSTMENT - REGLAGE VERTICAL<br>VERTIKALVERSTELLUNG - UBICATION VERTICAL | 227-1209-0 |
|---|---|---|---|

| N | P | C | CODICE | Q.TY | DENOMINAZIONE | DESCRIPTION | DESIGNATION | BEZEICHNUNG | DENOMINACION |
|---|---|---|---|---|---|---|---|---|---|
| | 01.01.1901 -> 01.01.3000 | | | | Note: 2822731125G | | | | |
| | 1 | | 0319434402F | 1.00 | CARTER | COVER | CARTER | GEHAEUSE | CARTER |
| | 2 | | 0739736145G | 1.00 | ASS.ENCODER 300IMP/G | ASS.ENCODER 300IMP/G | ASS.ENCODER 300IMP/G | ASS.ENCODER 300IMP/G | ASS.ENCODER 300IMP/G |
| | 3 | | 0001331046A | 1.00 | MOTORE TRIF. FRENO C.C. | 3-PH. MOTOR D.C. BRAKE | MOTEUR 3-PH . FREIN C.C | 3-PH. MOTOR G.S. BREMSE | MOT. TRIFAS. FR. C.C. |
| | 4 | | 0321930124A | 2.00 | DISTANZIALE | SPACER | ENTRETOISE | DISTANZSTUECK | DISTANCIADOR |
| | 5 | | 0321930112E | 1.00 | SUPPORTO | SUPPORT | SUPPORT | STUETZE | SOPORTE |
| | 6 | | 0000639207C | 1.00 | RIDUTTORE | GEAR UNIT | REDUCTEUR | GETRIEBE | REDUCTOR |
| | 7 | | 0001352111D | 1.00 | PRESSACAVO DIR. | CLAMPING SCREW (STRAIGHT) | SERRECABLE DROIT | KABELENDE (GERADE) | TOMA-CABLES DERECHO |
| | 8 | | 0322732015B | 1.00 | SUPPORTO | SUPPORT | SUPPORT | STUETZE | SOPORTE |
| | 9 | | 0000613045G | 4.00 | RALLA | WASHER | CRAPAUDINE | SCHEIBE | RANGUA |
| | 10 | | 0000613041H | 2.00 | GABBIA A RULLINI | ROLLER CAGE | CAGE A ROULEAUX | WALZENKAEFIG | COJINETE |
| | 11 | | 0317521504D | 2.00 | ANELLO | RING | BAGUE | RING | ANILLO |
| | 12 | | 0000301853D | 1.00 | GHIERA | COLLAR | EMBOUT | NUTMUTTER | COLLAR |
| | 13 | | 0321930129B | 1.00 | FLANGIA | FLANGE | FLASQUE | FLANSCH | BRIDA |
| | 14 | | 0000645059F | 1.00 | LINGUETTA | FEATHER KEY | LANGUETTE | FEDERKEIL | LINGUETA |
| | 15 | | 0522731126A | 1.00 | ASTA | ROD | TIGE | STANGE | ASTA |
| | 15 | | 0522732061C | 1.00 | ASTA | ROD | TIGE | STANGE | ASTA |
| | 16 | | 0366535401E | 1.00 | INTERFACCIA | RING NUT | EMBOUT | STELLRING | CONEXION |
| | 17 | | 0766535414B | 1.00 | MOTORE | MOTOR | MOTEUR | MOTOR | MOTOR |

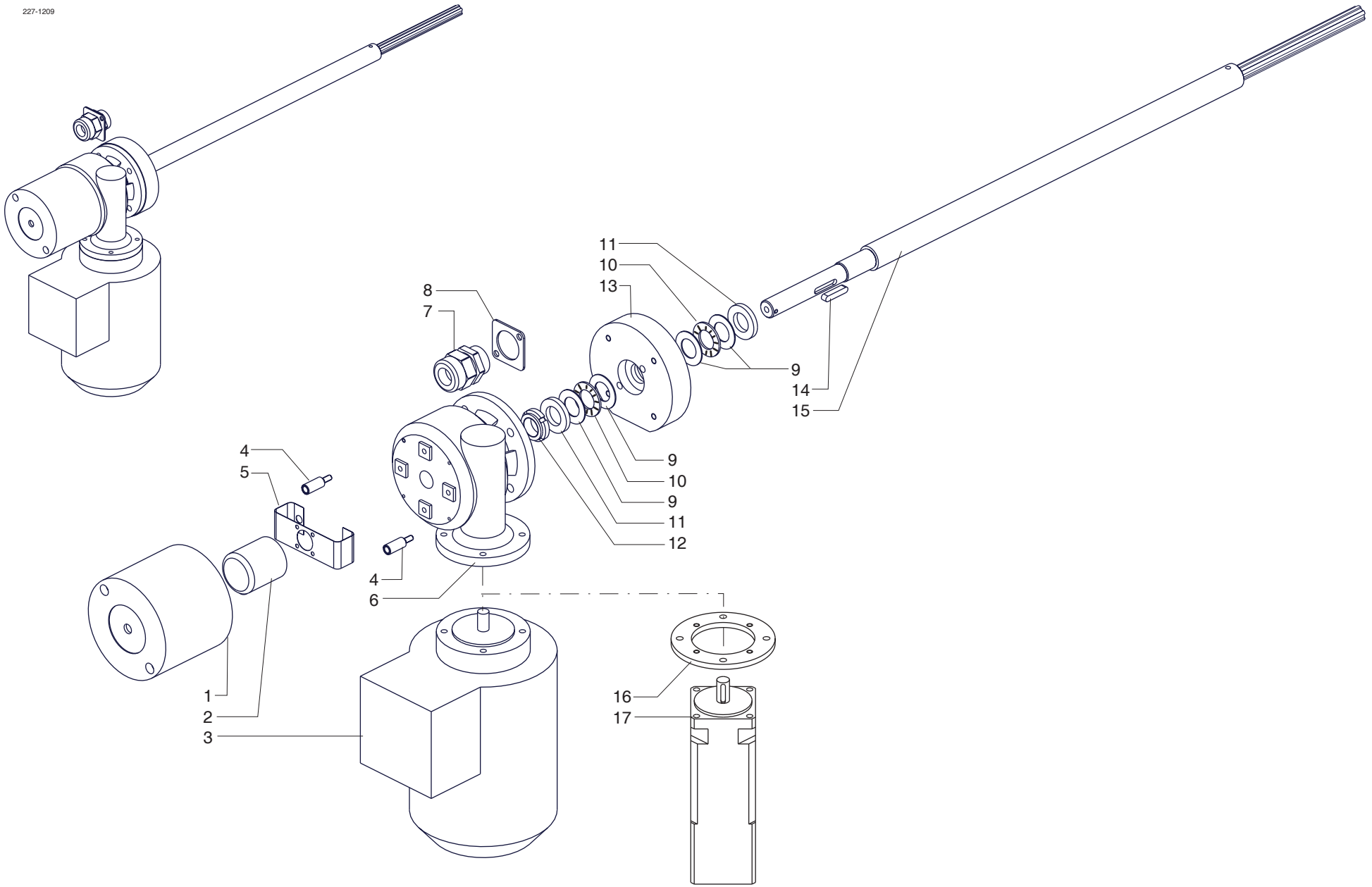


| | | | |
|---|---|---|---|
| scm | SUPERSET XL | POSIZIONAMENTO VERTICALE - (01.01.1901 -> - p.20,06,2007)<br>VERTICAL ADJUSTMENT - REGLAGE VERTICAL<br>VERTIKALVERSTELLUNG - UBICATION VERTICAL | 227-1209-0 |

| scm | SUPERSET XL | ALBERO TOUPIE SINISTRO - (p.20,06,2007)<br>MOULDING SPINDLE (LEFT) - ARBRE TOUPIE (GAUCHE)<br>FREASSPINDEL (LINK) - * | 227-1300-0 |
|---|---|---|---|

| N | P | C | CODICE | Q.TY | DENOMINAZIONE | DESCRIPTION | DESIGNATION | BEZEICHNUNG | DENOMINACION |
|---|---|---|---|---|---|---|---|---|---|
| | 01.01.1901 -> 01.01.3000 | | | | Note: 3122730000F | | | | |
| | 1 | | 0319013512L | 0.00 | POMELLO | BALL GRIP | POIGNEE | KUGELGRIFF | POMO |
| | 2 | | 0310830314L | 1.00 | BOCCOLA | BUSHING | DOUILLE | BUCHSE | CASQUILLO |
| | 3 | | 2711135400C | 1.00 | BLOCCAGGIO | LOCKING DEVICE | BLOCAGE | SPERRE | BLOQUEO |
| | 3 | | 2711135410D | 1.00 | BLOCCAGGIO | LOCKING DEVICE | BLOCAGE | SPERRE | BLOQUEO |

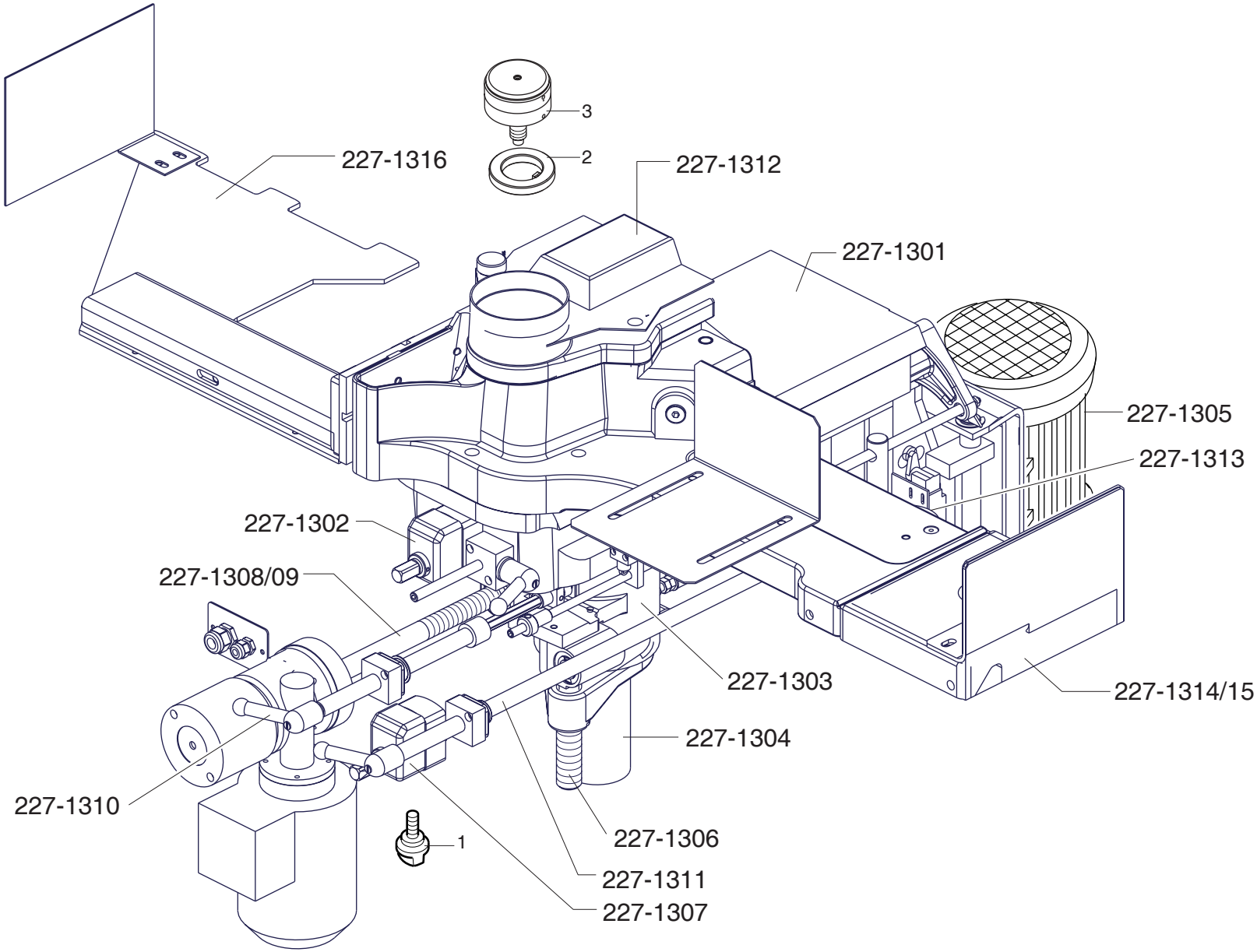


| scm | SUPERSET XL | ALBERO TOUPIE SINISTRO - (01.01.1901 -> - p.20,06,2007)<br>MOULDING SPINDLE (LEFT) - ARBRE TOUPIE (GAUCHE)<br>FREASSPINDEL (LINK) - * | 227-1300-0 |
|---|---|---|---|

| scm | SUPERSET XL | SLITTA - (p.20,06,2007)<br>SLIDE - GLISSIERE<br>SCHLITTEN - TRINEO | 227-1301-0 |
|---|---|---|---|

| N | P | C | CODICE | Q.TY | DENOMINAZIONE | DESCRIPTION | DESIGNATION | BEZEICHNUNG | DENOMINACION |
|---|---|---|---|---|---|---|---|---|---|
| | 01.01.1901 -> 01.01.3000 | | | | Note: 2822730109C | | | | |
| 1 | | | 0322730105A | 1.00 | LUNETTA | REST | LUNETTE | LUENETTE | LUNETO |
| 1 | | | 0322730106C | 1.00 | LUNETTA | REST | LUNETTE | LUENETTE | LUNETO |
| 2 | | | 0000301301C | 3.00 | DADO | NUT | ECROU | MUTTER | TUERCA |
| 3 | | | 0322730169F | 3.00 | VITE DI REGISTRO | SCREW | VIS REGLAGE | STELLSCHRAUBE | TORNILLO DE REGULACION |
| 4 | | | 0322730187D | 1.00 | SUPPORTO | SUPPORT | SUPPORT | STUETZE | SOPORTE |
| 5 | | | 0322730101B | 1.00 | SLITTA | SLIDE | COULISSE | SCHLITTEN | CORREDERA |
| 5 | | | 0322730107E | 1.00 | SLITTA | SLIDE | COULISSE | SCHLITTEN | CORREDERA |
| 5 | | | 0322730112E | 1.00 | SLITTA | SLIDE | COULISSE | SCHLITTEN | CORREDERA |
| 6 | | | 0000301303G | 1.00 | DADO | NUT | ECROU | MUTTER | TUERCA |
| 7 | | | 0322732006C | 1.00 | CAMMA | CAM | CAME | NOCKEN | EXCENTRICO |
| 8 | | | 0322730188F | 1.00 | ASTA | ROD | TIGE | STANGE | ASTA |
| 9 | | | 0322730111C | 1.00 | LARDONE | GIB | CONTRE-FER | STELLEISTE | CHAVETA |
| 10 | | | 0000316525F | 3.00 | PRIGIONIERO | STUD BOLT | PRISONNIER | STIFTSCHRAUBE | TORNILLO S.CAB. |
| 11 | | | 0000301363D | 3.00 | DADO | NUT | ECROU | MUTTER | TUERCA |
| 12 | | | 0317574624C | 1.00 | MADREVITE TPN.25X5 | NUT SCREW | VIS-MERE | MUTTERGEWINDE | TUERCA |
| 13 | | | 0316333847B | 1.00 | MADREVITE TPN.20X5 | NUT SCREW | VIS-MERE | MUTTERGEWINDE | TUERCA |
| 14 | | | 0322730145E | 1.00 | STAFFA | BRACKET | BRIDE | BUEGEL | ABRAZADERA |
| 15 | | | 0322732007E | 1.00 | ASTA | ROD | TIGE | STANGE | ASTA |
| 16 | | | 0339057710E | 1.00 | BOCCOLA | BUSHING | DOUILLE | BUCHSE | CASQUILLO |
| 17 | | | 0322732013G | 1.00 | STAFFA | BRACKET | BRIDE | BUEGEL | ABRAZADERA |
| 17 | | | 0322732019A | 1.00 | SUPPORTO | SUPPORT | SUPPORT | STUETZE | SOPORTE |
| 18 | | | 0387672010F | 1.00 | RACCORDO | FITTING | RACCORD | ANSCHLUSS | CONEXION |
| 19 | | | 0001308592L | 1.00 | FINECORSA | LIMIT SWITCH | FIN DE COURSE | ENDSCHALTER | FIN CARRERA |
| 21 | | | 0322732043A | 1.00 | STAFFA | BRACKET | BRIDE | BUEGEL | ABRAZADERA |

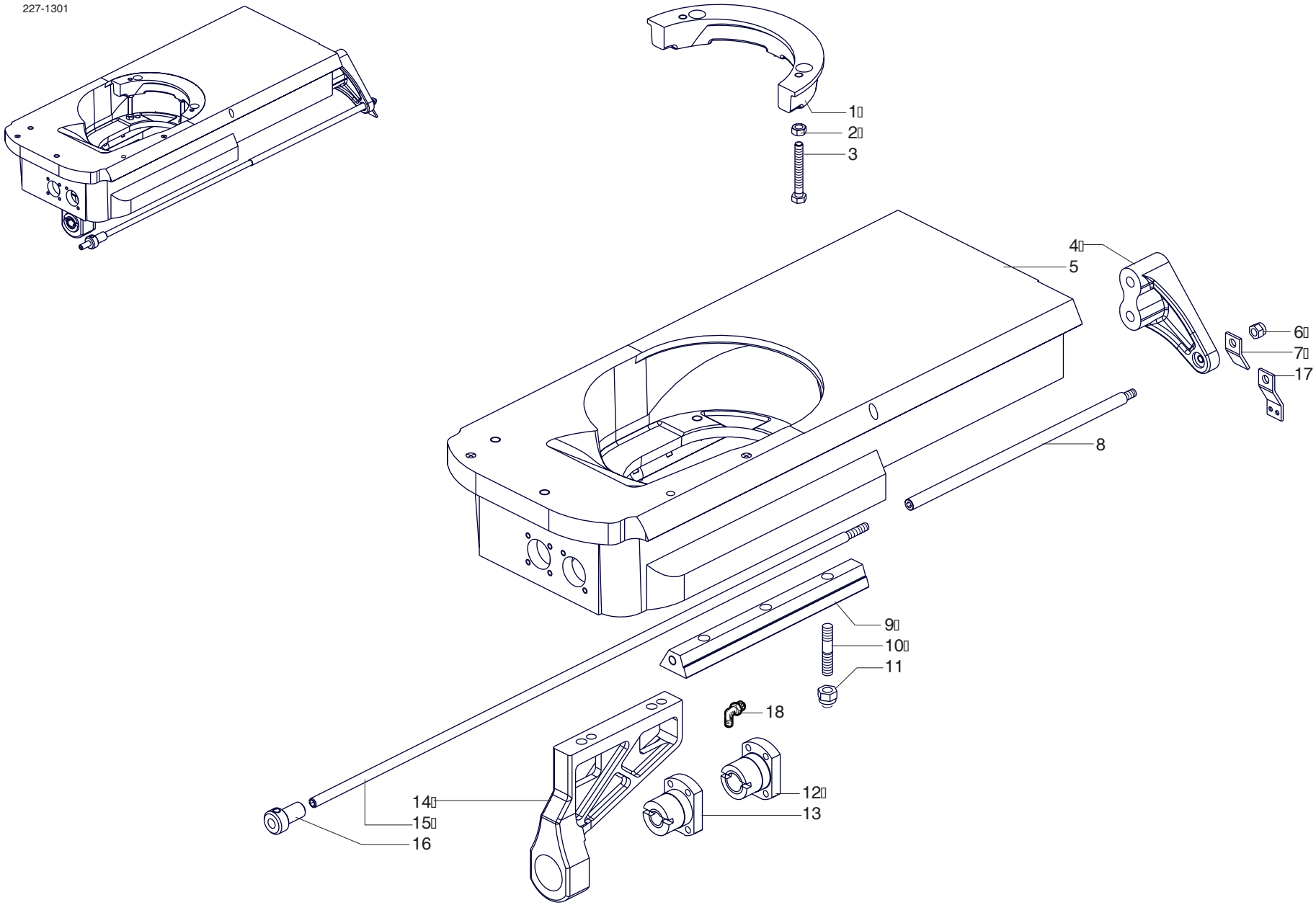


| | | | |
|---|---|---|---|
| scm | **SUPERSET XL** | **SLITTA - (01.01.1901 -> 09.11.2000 - p.20,06,2007)**<br>**SLIDE - GLISSIERE**<br>**SCHLITTEN - TRINEO** | **227-1301-0** |

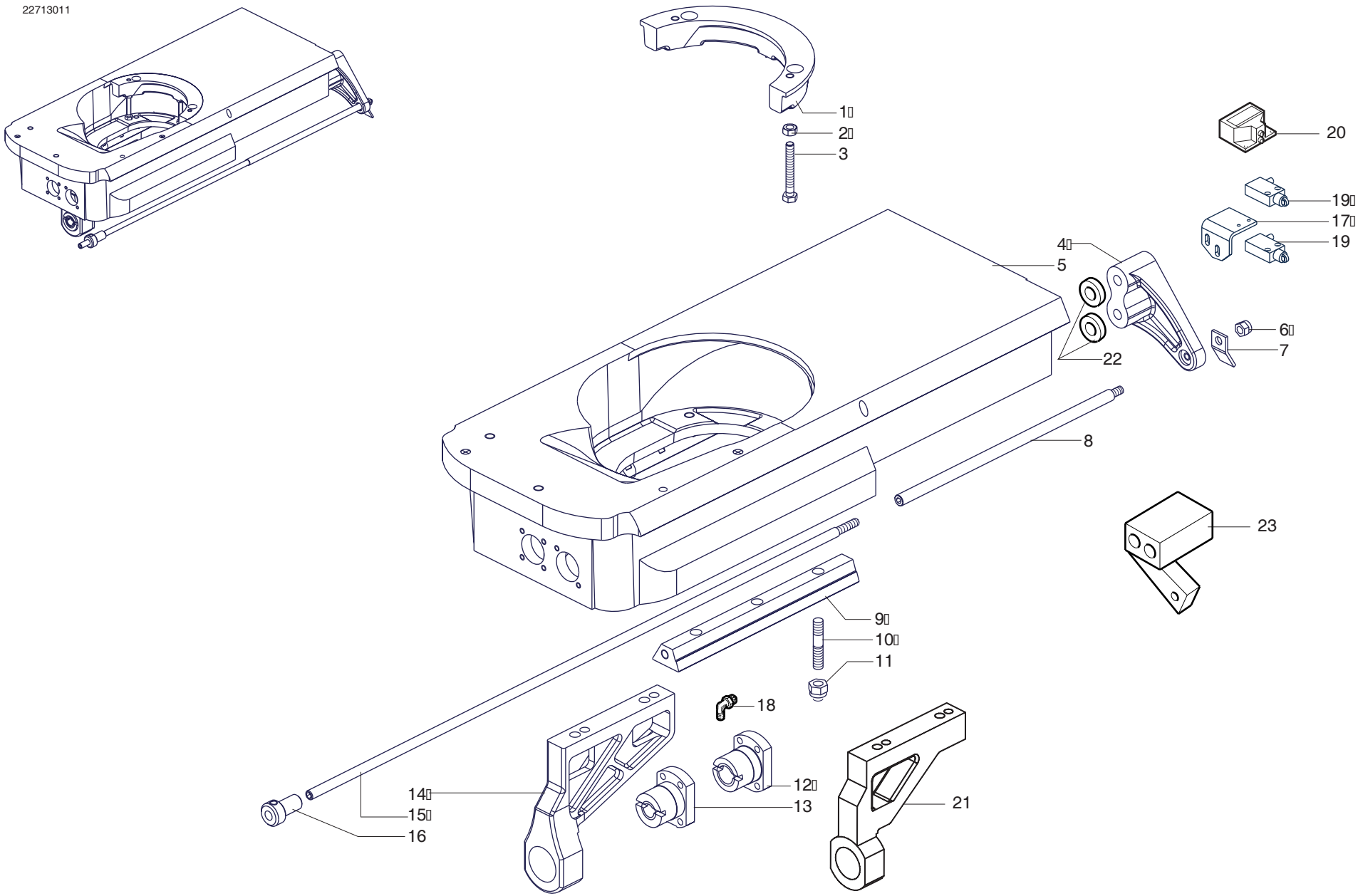


| scm | SUPERSET XL | SLITTA - (10.11.2000 -> - p.20,06,2007)<br>SLIDE - GLISSIERE<br>SCHLITTEN - TRINEO | 227-1301-0 |
|---|---|---|---|

| scm | SUPERSET XL | POSIZIONAMENTO DIAMETRO UTENSILE - (p.20,06,2007)<br>ADJUSTMENT ACCORDING TO TOOL DIAMETER - REGLAGE SUIVANT DIAMETRE OUTIL<br>VERSTELLUNG NACH NERKZEUGDURCHMESSER - UBICACION DIAMETRO UTENSILIO | 227-1302-0 |
|---|---|---|---|

| N | P | C | CODICE | Q.TY | DENOMINAZIONE | DESCRIPTION | DESIGNATION | BEZEICHNUNG | DENOMINACION |
|---|---|---|---|---|---|---|---|---|---|
| | 01.01.1901 -> 01.01.3000 | | | | Note: 2822730225H | | | | |
| | 1 | | 0000635039B | 1.00 | INDICATORE NUMERICO | INDICATOR | INDICATEUR | ANZEIGER | INDICADOR |
| | 1 | | 0000635270A | 1.00 | INDICATORE NUMERICO | INDICATOR | INDICATEUR | ANZEIGER | INDICADOR NUMERICO |
| | 1 | | 0766580007D | 1.00 | INDICATORE NUMERICO LIKA | INDICATOR | INDICATEUR | ANZEIGER | INDICADOR NUMERICO |
| | 2 | | 0522730170B | 1.00 | FLANGIA | FLANGE | FLASQUE | FLANSCH | BRIDA |
| | 3 | | 0000613041H | 2.00 | GABBIA A RULLINI | ROLLER CAGE | CAGE A ROULEAUX | WALZENKAEFIG | COJINETE |
| | 4 | | 0316330020C | 1.00 | RONDELLA | WASHER | RONDELLE | SCHEIBE | ARANDELA |
| | 5 | | 0000613045G | 4.00 | RALLA | WASHER | CRAPAUDINE | SCHEIBE | RANGUA |
| | 6 | | 0322730171L | 1.00 | BOCCOLA | BUSHING | DOUILLE | BUCHSE | CASQUILLO |
| | 7 | | 0322730127G | 1.00 | VITE | SCREW | VIS | SCHRAUBE | TORNILLO |
| | 8 | | 0322775009B | 1.00 | TARGA | PLATE | PLAQUE | SCHILD | TARJETA |
| | 9 | | 0319013512L | 1.00 | POMELLO | BALL GRIP | POIGNEE | KUGELGRIFF | POMO |

227-1302

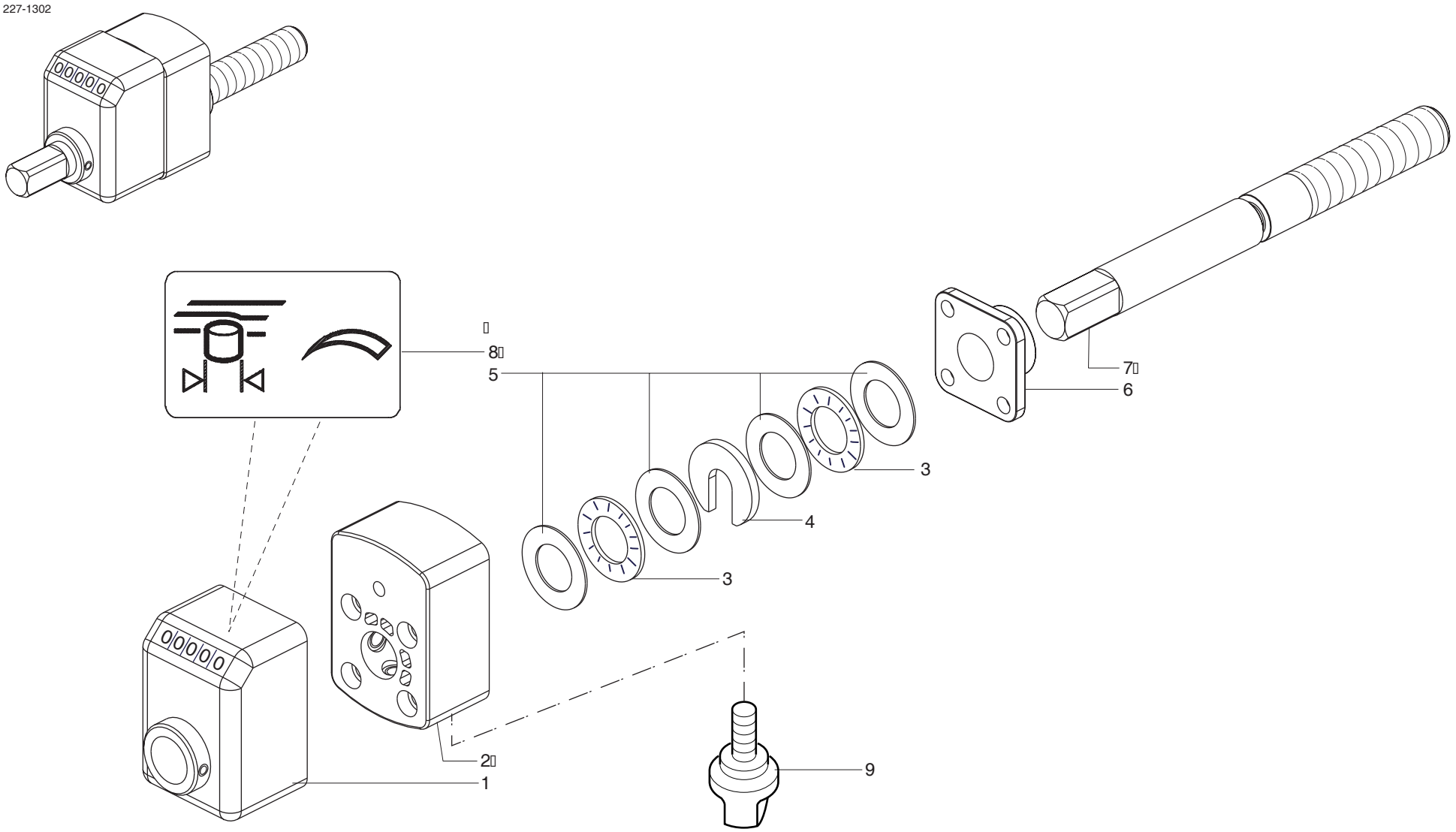


| | | | |
|---|---|---|---|
| scm | SUPERSET XL | POSIZIONAMENTO DIAMETRO UTENSILE - (01.01.1901 -> - p.20,06,2007)<br>ADJUSTMENT ACCORDING TO TOOL DIAMETER - REGLAGE SUIVANT DIAMETRE OUTIL<br>VERSTELLUNG NACH NERKZEUGDURCHMESSER - UBICACION DIAMETRO UTENSILIO | 227-1302-0 |

| scm | SUPERSET XL | SLITTA DEL POSIZIONAMENTO DIAM. UTENSILE - (p.20,06,2007)<br>SLIDE (ADJUST. FOR TOOL DIAMETER) - GLISSIERE REGLAGE SUIVANT DIAM. OUTIL<br>SCHLITTEN (VERST. NACH NERKZEUGDURCH) - TRINEO DE LA UBICACION DIAM. UTENSILIO | 227-1303-0 |
|---|---|---|---|

| N | P | C | CODICE | Q.TY | DENOMINAZIONE | DESCRIPTION | DESIGNATION | BEZEICHNUNG | DENOMINACION |
|---|---|---|---|---|---|---|---|---|---|
| | 01.01.1901 -> 01.01.3000 | | | | Note: 2822730190C | | | | |
| 1 | | | 0000301363D | 1.00 | DADO | NUT | ECROU | MUTTER | TUERCA |
| 2 | | | 0000305361D | 1.00 | ROSETTA | WASHER | RONDELLE | SCHEIBE | ARANDELA |
| 3 | | | 0311131124B | 1.00 | SLITTA | SLIDE | COULISSE | SCHLITTEN | CORREDERA |
| 3 | | | 0322730103F | 1.00 | SLITTA | SLIDE | COULISSE | SCHLITTEN | CORREDERA |
| 3 | | | 0322732011C | 1.00 | SLITTA | SLIDE | COULISSE | SCHLITTEN | CORREDERA |
| 4 | | | 0322730135D | 1.00 | ASTA | ROD | TIGE | STANGE | ASTA |
| 5 | | | 0322730196C | 1.00 | BARRA | BAR | BARRE | STANGE | BARRA |
| 5 | | | 0322730197E | 1.00 | BARRA | BAR | BARRE | STANGE | BARRA |
| 5 | | | 0522730149H | 1.00 | ECCENTRICO | ECCENTRIC | EXCENTRIQUE | NOCKEN | EXCENTRICO |
| 6 | | | 0000308374E | 1.00 | VITE | SCREW | VIS | SCHRAUBE | TORNILLO |
| 6 | | | 0522730151B | 1.00 | TIRANTE | TIE-ROD | TIRANT | ZUGBOLZEN | TIRANTE |
| 7 | | | 0322730167B | 1.00 | QUADRO | BOARD | PANNEAU | TAFEL | CUADRO |
| 8 | | | 0322730129B | 1.00 | PERNO | PIN | PIVOT | BOLZEN | PERNO |
| 9 | | | 0000305245H | 1.00 | ROSETTA | WASHER | RONDELLE | SCHEIBE | ARANDELA |
| 10 | | | 0719412601A | 1.00 | MANIGLIA | HANDLE | POIGNEE | HANDGRIFF | MANIJA |
| 11 | | | 0322731026D | 1.00 | LEVA | LEVER | LEVIER | HEBEL | PALANCA |
| 12 | | | 0000307335B | 1.00 | SPINA | PIN | GOUPILLE | STIFT | REMACHE |

227-1303

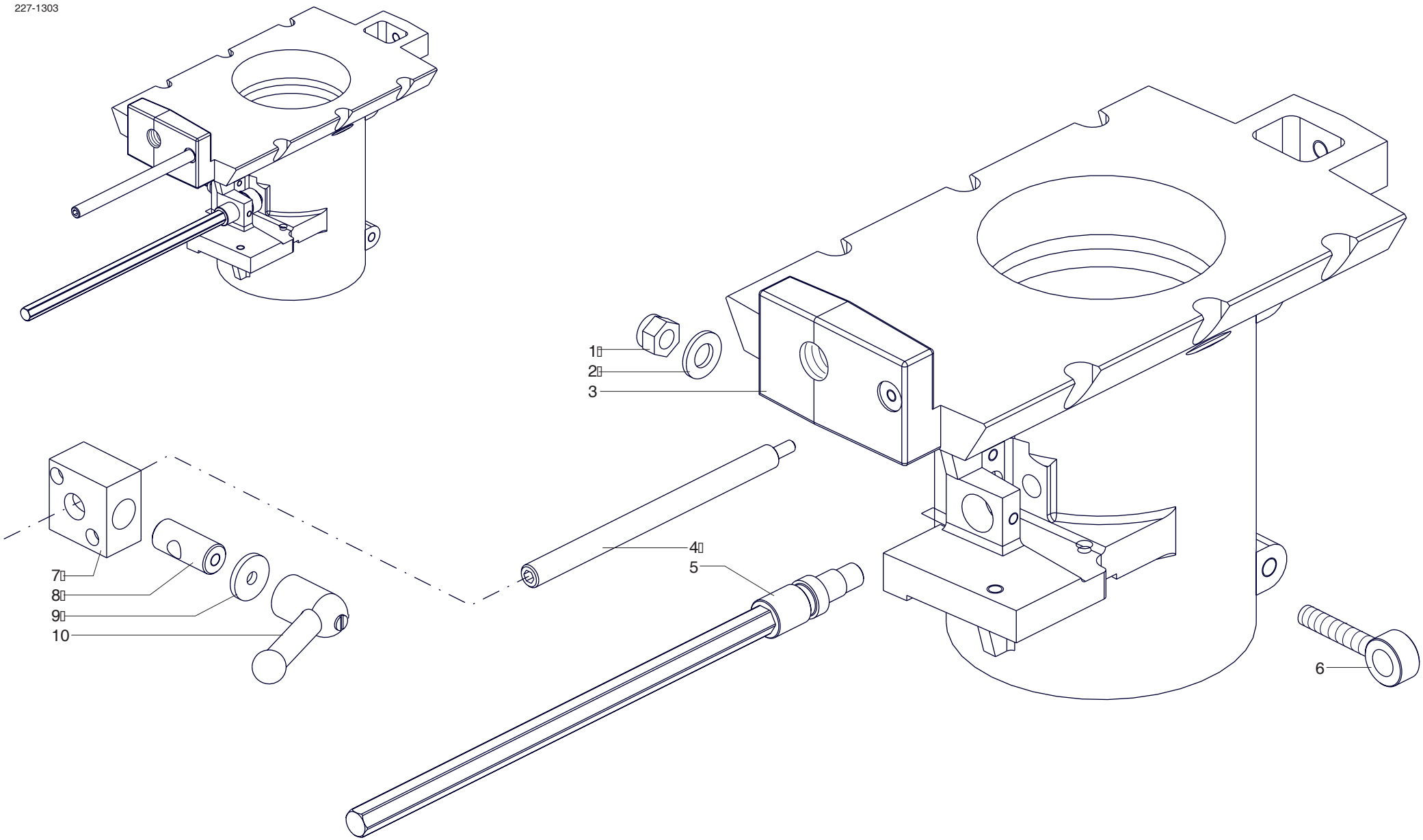


| scm | SUPERSET XL | SLITTA DEL POSIZIONAMENTO DIAM. UTENSILE - (01.01.1901 -> 19.04.2000 - p.20,06,2007)<br>SLIDE (ADJUST. FOR TOOL DIAMETER) - GLISSIERE REGLAGE SUIVANT DIAM. OUTIL<br>SCHLITTEN (VERST. NACH NERKZEUGDURCH) - TRINEO DE LA UBICACION DIAM. UTENSILIO | 227-1303-0 |
|---|---|---|---|

22713031

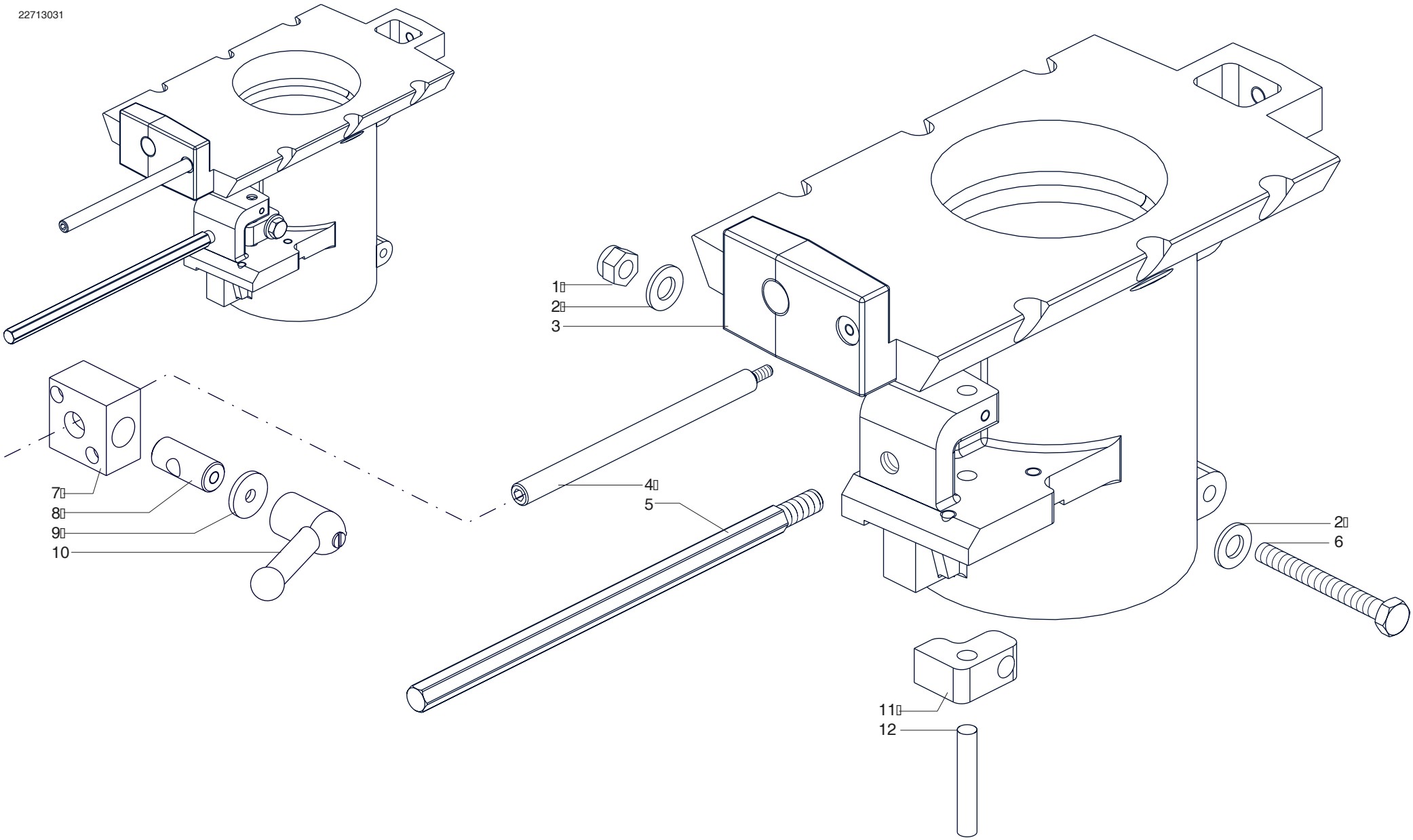


| scm | SUPERSET XL | SLITTA DEL POSIZIONAMENTO DIAM. UTENSILE - (20.04.2000 -> - p.20,06,2007)<br>SLIDE (ADJUST. FOR TOOL DIAMETER) - GLISSIERE REGLAGE SUIVANT DIAM. OUTIL<br>SCHLITTEN (VERST. NACH NERKZEUGDURCH) - TRINEO DE LA UBICACION DIAM. UTENSILIO | 227-1303-0 |
|---|---|---|---|

| N | P | C | CODICE | Q.TY | DENOMINAZIONE | DESCRIPTION | DESIGNATION | BEZEICHNUNG | DENOMINACION |
|---|---|---|---|---|---|---|---|---|---|
| | 01.01.1901 -> 01.01.3000 | | | | Note: 2822732010D | | | | |
| | 1 | | 0322731023G | 1.00 | BLOCCAGGIO | LOCKING DEVICE | BLOCAGE | SPERRE | BLOQUEO |
| | 2 | | 0322731029A | 1.00 | ATTACCO | CONNECTING ROD | BARRE FIXATION | STAB | CONEXION |
| | 3 | | 0001502030C | 1.00 | CILINDRO PNEUMATICO | PNEUMATIC CYLINDER | CYLINDRE PNEUMATIQUE | PNEUMATIKZYLINDER | CILINDRO NEUMATICO |
| | 3 | | 0002038165L | 1.00 | CILINDRO PNEUMATICO | PNEUMATIC CYLINDER | CYLINDRE PNEUMATIQUE | PNEUMATIKZYLINDER | CILINDRO NEUMATICO |
| | 4 | | 0000626553A | 1.00 | SUPPORTO | SUPPORT | SUPPORT | STUETZE | SOPORTE |
| | 4 | | 0001308100F | 1.00 | SUPPORTO | SUPPORT | SUPPORT | STUETZE | SOPORTE |
| | 5 | | 0001308846L | 1.00 | FINECORSA PER CILINDRO | LIMIT SWITCH | FIN DE COURSE | ENDSCHALTER | FIN CARRERA |
| | 6 | | 0311132716L | 1.00 | PERNO | PIN | PIVOT | BOLZEN | PERNO |
| | 6 | | 0322731022E | 1.00 | PERNO | PIN | PIVOT | BOLZEN | PERNO |
| | 7 | | 0000305044B | 1.00 | ROSETTA | WASHER | RONDELLE | SCHEIBE | ARANDELA |
| | 7 | | 0000305361D | 1.00 | ROSETTA | WASHER | RONDELLE | SCHEIBE | ARANDELA |
| | 7 | | 0000305780C | 3.00 | ANELLO | RING | BAGUE | RING | ANILLO |
| | 7 | | 0000613375G | 2.00 | RALLA | WASHER | CRAPAUDINE | SCHEIBE | RANGUA |
| | 8 | | 0311131124B | 1.00 | SLITTA | SLIDE | COULISSE | SCHLITTEN | CORREDERA |
| | 8 | | 0322732009L | 1.00 | SLITTA | SLIDE | COULISSE | SCHLITTEN | CORREDERA |
| | 9 | | 0322730135D | 1.00 | ASTA | ROD | TIGE | STANGE | ASTA |
| | 10 | | 0001905110A | 2.00 | RACCORDO | FITTING | RACCORD | ANSCHLUSS | CONEXION |
| | 11 | | 0322731024L | 1.00 | PIASTRA | PLATE | PLAQUE | PLATTE | PLANCHA |
| | 12 | | 0001344082B | 1.00 | ELETTROVALVOLA V.110 | SOLENOID VALVE | ELECTROVALVE | MAGNETVENTIL | ELECTROVALVULA |
| | 13 | | 0001304320H | 1.00 | CONNETTORE | CONNECTOR | CONNECTEUR | VERBINDER | CONECTADOR |
| | 13 | | 0336500265A | 1.00 | CONNETTORE | CONNECTOR | CONNECTEUR | VERBINDER | CONECTADOR |
| | 14 | | 0322371108C | 1.00 | SOFFIATORE | BLOWER | SOUFFLEUR | BLAESER | SOPLADOR |
| | 15 | | 0322731028H | 1.00 | PIASTRA | PLATE | PLAQUE | PLATTE | PLANCHA |
| | 16 | | 0001308055A | 1.00 | FINECORSA | MICROSWITCH | FIN DE COURSE | MIKROSCHALTER | FIN CARRERA |
| | 16 | | 2711131510B | 1.00 | FINECORSA | LIMIT SWITCH | FIN DE COURSE | ENDSCHALTER | FIN CARRERA |
| | 16 | | 2722740801A | 1.00 | FINECORSA | LIMIT SWITCH | FIN DE COURSE | ENDSCHALTER | FIN CARRERA |
| | 16 | | 2722740891A | 1.00 | FINECORSA | LIMIT SWITCH | FIN DE COURSE | ENDSCHALTER | FIN CARRERA |
| | 17 | | 0000308485A | 1.00 | VITE | SCREW | VIS | SCHRAUBE | TORNILLO |
| | 18 | | 0000301484A | 1.00 | DADO | NUT | ECROU | MUTTER | TUERCA |
| | 19 | | 0001508862E | 1.00 | VALVOLA | VALVE | VALVE | VENTIL | VALV. |
| | 20 | | 0001308695H | 1.00 | VALVOLA | VALVE | VALVE | VENTIL | VALV. |
| | 21 | | 0001904061E | 3.00 | RACCORDO | FITTING | RACCORD | ANSCHLUSS | CONEXION |
| | 22 | | 0000613029D | 1.00 | GABBIA A RULLINI | ROLLER CAGE | CAGE A ROULEAUX | WALZENKAEFIG | COJINETE |
| | 23 | | 0311131069E | 1.00 | DISTANZIALE | SPACER | ENTRETOISE | DISTANZSTUECK | DISTANCIADOR |

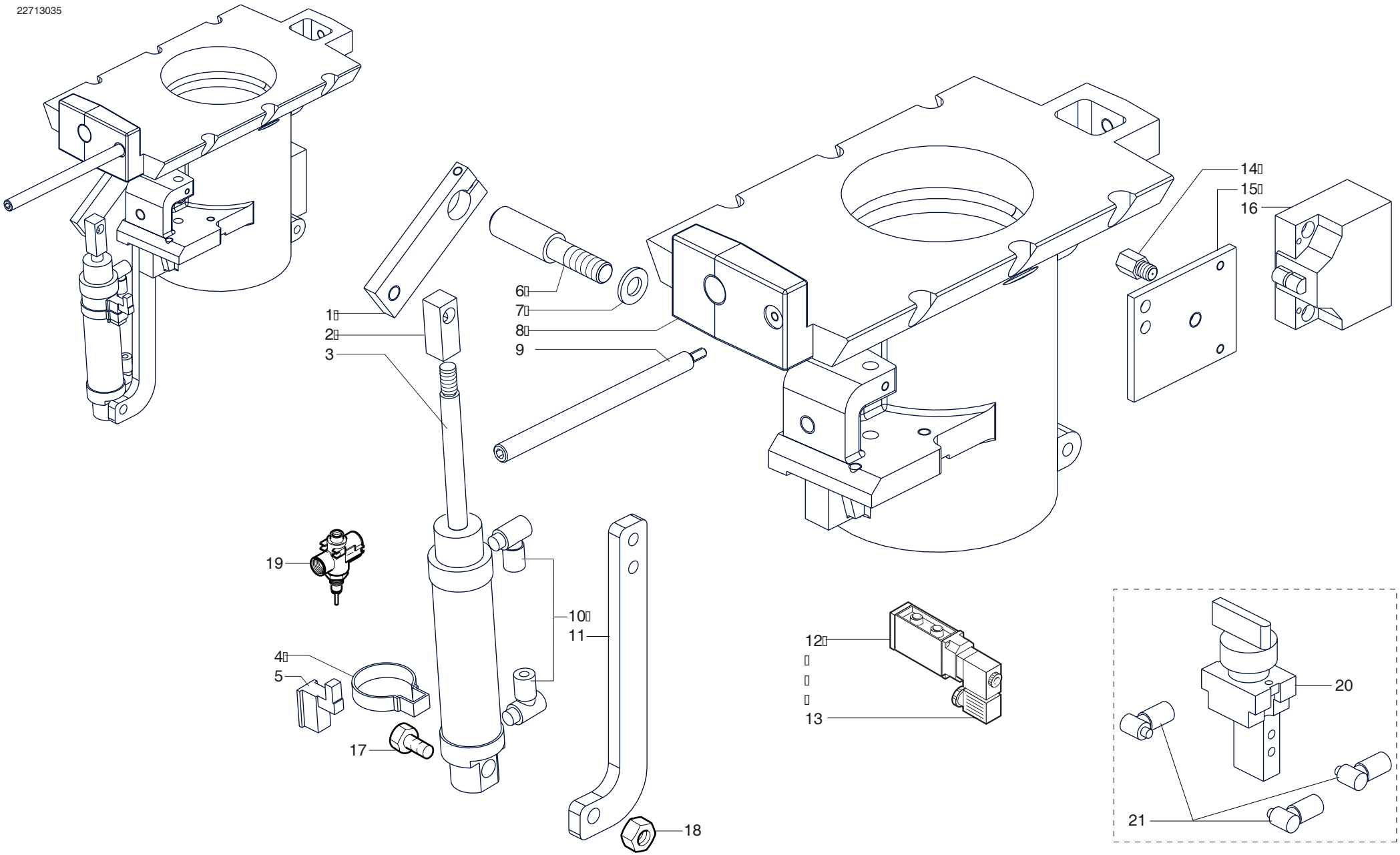


| | | | |
|---|---|---|---|
| scm | SUPERSET XL | SLITTA DEL POSIZIONAMENTO DIAM. UTENSILE - (01.01.1901 -> 05.11.2002 - p.20,06,2007)<br>SLIDE (ADJUST. FOR TOOL DIAMETER) - GLISSIERE REGLAGE SUIVANT DIAM. OUTIL<br>SCHLITTEN (VERST. NACH NERKZEUGDURCH) - TRINEO DE LA UBICACION DIAM. UTENSILIO | 227-1303-5 |

227130351

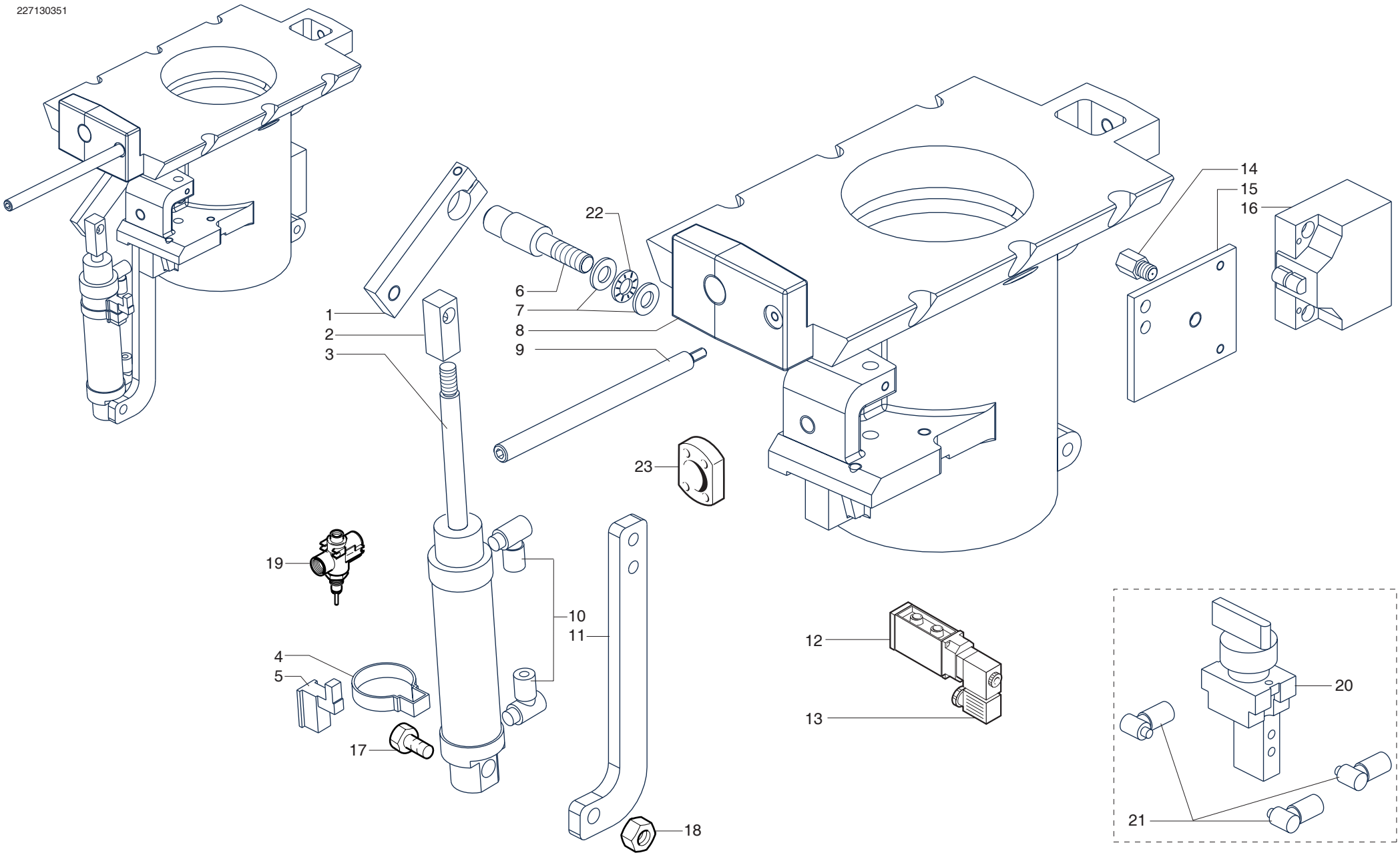


| | | | |
|---|---|---|---|
| scm | SUPERSET XL | SLITTA DEL POSIZIONAMENTO DIAM. UTENSILE - (06.11.2002 -> - p.20,06,2007)<br>SLIDE (ADJUST. FOR TOOL DIAMETER) - GLISSIERE REGLAGE SUIVANT DIAM. OUTIL<br>SCHLITTEN (VERST. NACH NERKZEUGDURCH) - TRINEO DE LA UBICACION DIAM. UTENSILIO | 227-1303-5 |

| scm | SUPERSET XL | ALBERO TOUPIE - (p.20,06,2007)<br>MOULDING SPINDLE - ARBRE TOUPIE<br>FRAESSPINDEL - EJE TUPI | 227-1304-0 |
|---|---|---|---|

| N | P | C | CODICE | Q.TY | DENOMINAZIONE | DESCRIPTION | DESIGNATION | BEZEICHNUNG | DENOMINACION |
|---|---|---|---|---|---|---|---|---|---|
| | 01.01.1901 -> 01.01.3000 | | | | Note: 2822730200E | | | | |
| | 1 | | 0000308566C | 1.00 | VITE | SCREW | VIS | SCHRAUBE | TORNILLO |
| | 2 | | 0327430300B | 1.00 | RONDELLA | WASHER | RONDELLE | SCHEIBE | ARANDELA |
| | 3 | | 0316036400C | 1.00 | ANELLO CON DENTATURA D=40 | RING | BAGUE | RING | ANILLO |
| | 3 | | 0516036600B | 1.00 | ANELLO CON DENTATURA D=35 | RING | BAGUE | RING | ANILLO |
| | 3 | | 2739030101B | 1.00 | ANELLO CON DENTATURA | RING | BAGUE | RING | ANILLO |
| | 4 | | 0319433349C | 1.00 | GHIERA | RING NUT | EMBOUT | NUTMUTTER | COLLAR |
| | 4 | | 0319433350D | 1.00 | GHIERA | RING NUT | EMBOUT | NUTMUTTER | COLLAR |
| | 5 | | 0319433348A | 1.00 | ANELLO | RING | BAGUE | RING | ANILLO |
| | 6 | | 0000606139H | 1.00 | CUSCINETTO | BEARING | ROULEMENT | LAGER | COJINETE |
| | 6 | | 0000606170C | 2.00 | CUSCINETTO | BEARING | ROULEMENT | LAGER | COJINETE |
| | 6 | | 0000609068A | 1.00 | CUSCINETTO | BEARING | ROULEMENT | LAGER | COJINETE |
| | 6 | | 0766547299B | 2.00 | CUSCINETTO | BEARING | ROULEMENT | LAGER | COJINETE |
| | 7 | | 0311136025G | 1.00 | ALBERO TOUPIE | SPINDLE | ARBRE | FRAESSPINDEL | EJE |
| | 7 | | 0311136026L | 1.00 | ALBERO TOUPIE | SPINDLE | ARBRE | FRAESSPINDEL | EJE |
| | 7 | | 0311136027B | 1.00 | ALBERO TOUPIE | SPINDLE | ARBRE | FRAESSPINDEL | EJE |
| | 7 | | 0322712003B | 1.00 | ALBERO TOUPIE | SPINDLE | ARBRE | FRAESSPINDEL | EJE |
| | 7 | | 0322712004D | 1.00 | ALBERO TOUPIE | SPINDLE | ARBRE | FRAESSPINDEL | EJE |
| | 7 | | 0322712005F | 1.00 | ALBERO TOUPIE | SPINDLE | ARBRE | FRAESSPINDEL | EJE |
| | 7 | | 0322712006H | 1.00 | ALBERO TOUPIE | SPINDLE | ARBRE | FRAESSPINDEL | EJE |
| | 7 | | 0322712007A | 1.00 | ALBERO TOUPIE | SPINDLE | ARBRE | FRAESSPINDEL | EJE |
| | 7 | | 0322712008C | 1.00 | ALBERO TOUPIE | SPINDLE | ARBRE | FRAESSPINDEL | EJE |
| | 7 | | 0322730021B | 1.00 | ALBERO TOUPIE | SPINDLE | ARBRE | FRAESSPINDEL | EJE |
| | 7 | | 0322730022D | 1.00 | ALBERO TOUPIE | SPINDLE | ARBRE | FRAESSPINDEL | EJE |
| | 7 | | 0322730023F | 1.00 | ALBERO TOUPIE | SPINDLE | ARBRE | FRAESSPINDEL | EJE |
| | 7 | | 0322730024H | 1.00 | ALBERO TOUPIE | SPINDLE | ARBRE | FRAESSPINDEL | EJE |
| | 7 | | 0322730025A | 1.00 | ALBERO TOUPIE D=35 | SPINDLE | ARBRE | FRAESSPINDEL | EJE |
| | 7 | | 0322730027E | 1.00 | ALBERO TOUPIE | SPINDLE | ARBRE | FRAESSPINDEL | EJE |
| | 7 | | 0322730180H | 1.00 | ALBERO TOUPIE | SPINDLE | ARBRE | FRAESSPINDEL | EJE |
| | 7 | | 0322730183E | 1.00 | ALBERO TOUPIE | SPINDLE | ARBRE | FRAESSPINDEL | EJE |
| | 8 | | 0311130800E | 1.00 | CILINDRO | CYLINDER | CYLINDRE | ZYLINDER | CILINDRO |
| | 8 | | 0322711001F | 1.00 | CILINDRO | CYLINDER | CYLINDRE | ZYLINDER | CILINDRO |
| | 8 | | 0322730160F | 1.00 | CILINDRO | CYLINDER | CYLINDRE | ZYLINDER | CILINDRO |
| | 9 | | 0000645169L | 1.00 | LINGUETTA | FEATHER KEY | LANGUETTE | FEDERKEIL | LINGUETA |
| | 10 | | 0000617759G | 6.00 | MOLLA TAZZA | SPRING | RESSORT | TELLERFEDER | RESORTE |
| | 11 | | 0319435570C | 1.00 | DISTANZIALE | SPACER | ENTRETOISE | DISTANZSTUECK | DISTANCIADOR |
| | 12 | | 0000606165C | 1.00 | CUSCINETTO | BEARING | ROULEMENT | LAGER | COJINETE |
| | 12 | | 0000608161F | 1.00 | CUSC.ALTA P. | HIGH PRECISION BEARING | ROULEMENT HAUTE PRECISION | HOCHPRAEZISIONSLAGER | COJ.ALTA PREC. |
| | 12 | | 0766547297G | 1.00 | CUSCINETTO (COPPIA) | BEARING | ROULEMENT | LAGER | COJINETE |
| | 12 | | 0766547298L | 1.00 | CUSCINETTO | BEARING | ROULEMENT | LAGER | COJINETE |

| N | P | C | CODICE | Q.TY | DENOMINAZIONE | DESCRIPTION | DESIGNATION | BEZEICHNUNG | DENOMINACION |
|---|---|---|---|---|---|---|---|---|---|
| | 13 | | 0322730161H | 1.00 | PULEGGIA | PULLEY | POULIE | RIEMENSCHEIBE | POLEA |
| | 14 | | 0311130801G | 1.00 | MADREVITE | NUT SCREW | VIS-MERE | MUTTERGEWINDE | TUERCA |
| | 14 | | 0322730162A | 1.00 | MADREVITE | NUT SCREW | VIS-MERE | MUTTERGEWINDE | TUERCA |
| | 15 | | 0319431142A | 1.00 | RONDELLA | WASHER | RONDELLE | SCHEIBE | ARANDELA |
| | 16 | | 0000308440E | 1.00 | VITE | SCREW | VIS | SCHRAUBE | TORNILLO |
| | 17 | | 0001347322E | 2.00 | CAMMA TCX-00-24 | CAM | CAME | NOCKEN | EXCENTRICO |
| | 18 | | 0001347321C | 1.00 | CAMMA TCX-10-34 | CAM | CAME ACTIONNEMENT | TREIBNOCKEN | EXCENT.ACC. |
| | 19 | | 0322731103G | 1.00 | GUIDA PORTACAMME | CAM HOLDER GUIDE | GUIDE PORTE-CAMES | NOCKENHALTER | GUIA PORTA EXC. |
| | 19 | | 0331919070B | 1.00 | GUIDA PORTACAMME | CAM HOLDER GUIDE | GUIDE PORTE-CAMES | NOCKENHALTER | GUIA PORTA EXC. |
| | 20 | | 0322731027F | 1.00 | PIASTRA | PLATE | PLAQUE | PLATTE | PLANCHA |
| | 21 | | 0322731021C | 1.00 | PIASTRA | PLATE | PLAQUE | PLATTE | PLANCHA |
| | 22 | | 0322732072B | 1.00 | BLOCCAGGIO | LOCKING DEVICE | BLOCAGE | SPERRE | BLOQUEO |
| | 22 | | 0322732073D | 1.00 | BLOCCAGGIO | LOCKING DEVICE | BLOCAGE | SPERRE | BLOQUEO |
| | 22 | | 0322732074F | 1.00 | BLOCCAGGIO | LOCKING DEVICE | BLOCAGE | SPERRE | BLOQUEO |
| | 28 | | 0319433356G | 1.00 | ANELLO | RING | BAGUE | RING | ANILLO |
| | 29 | | 0310130421H | 1.00 | GUARNIZIONE | GASKET | GARNITURE | DICHTUNG | JUNTA |
| | 30 | | 0310130420F | 1.00 | PARAPOLVERE | DUST COVER | PARE-POUSSIERE | STAUBDECKEL | PLACA RETENCION POLVO |
| | 31 | | 0519433357D | 1.00 | INGRASSATORE (NIPPLO) | GREASE NIPPLE | NIPPLE | SCHMIERNIPPEL | NIPLE ENGRASADOR |

227-1203

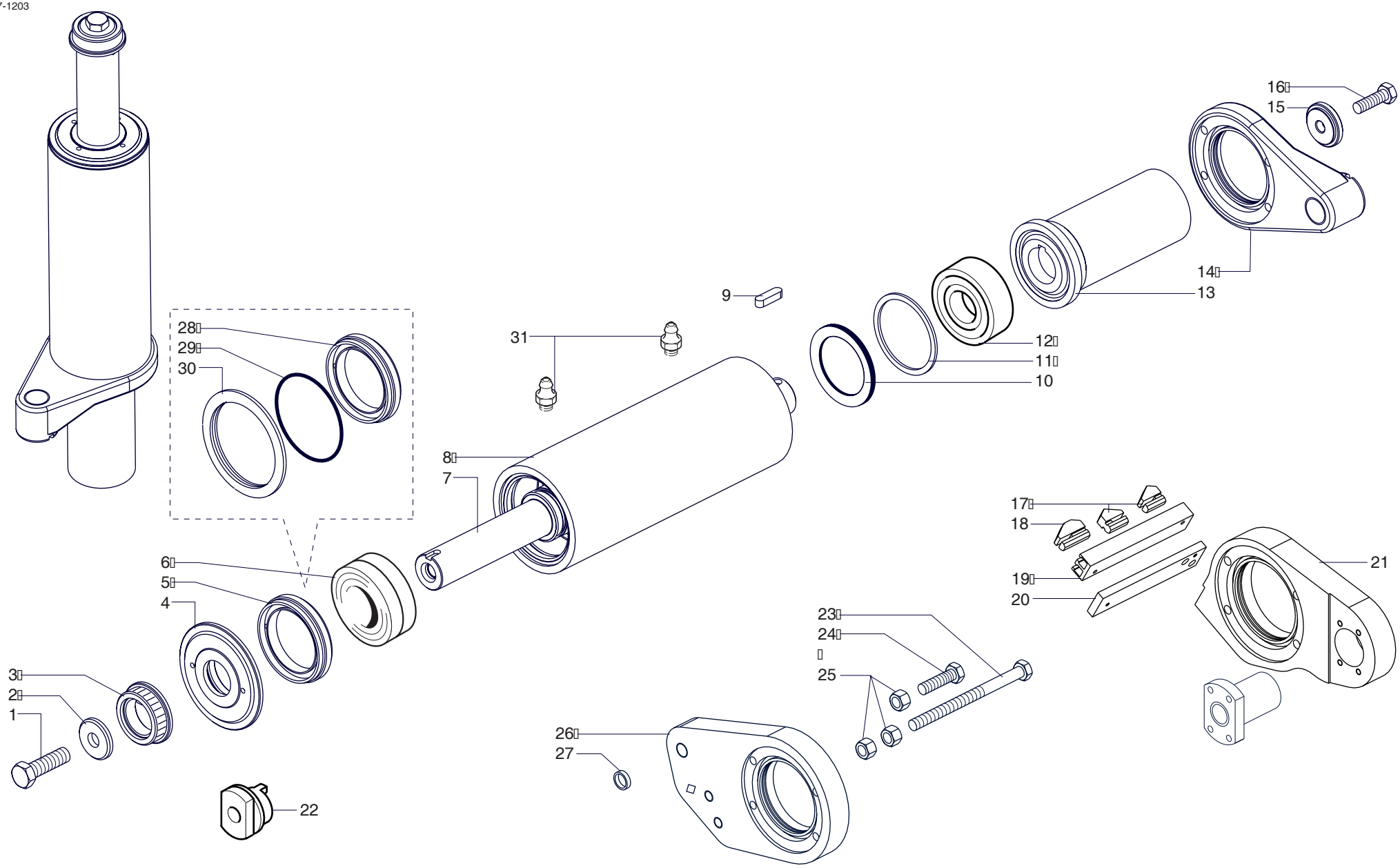


| | | | |
|---|---|---|---|
| scm | SUPERSET XL | ALBERO TOUPIE - (01.01.1901 -> - p.20,06,2007)<br>MOULDING SPINDLE - ARBRE TOUPIE<br>FRAESSPINDEL - EJE TUPI | 227-1304-0 |

| N | P | C | CODICE | Q.TY | DENOMINAZIONE | DESCRIPTION | DESIGNATION | BEZEICHNUNG | DENOMINACION |
|---|---|---|---|---|---|---|---|---|---|
| | 01.01.1901 -> 01.01.3000 | | | | Note: 2822730230H | | | | |
| | 1 | | 0000305332C | 5.00 | ROSETTA | WASHER | RONDELLE | SCHEIBE | ARANDELA |
| | 2 | | 0000301361L | 7.00 | DADO | NUT | ECROU | MUTTER | TUERCA |
| | 3 | | 0000304339G | 2.00 | VITE | SCREW | VIS | SCHRAUBE | TORNILLO |
| | 4 | | 0322730138A | 1.00 | TUBO | HOSE | TUYAU | SCHLAUCH | TUBO |
| | 5 | | 0322730139C | 1.00 | PRIGIONIERO | STUD BOLT | VIS PRISONNIERE | STIFTSCHRAUBE | PERNO PRISIONERO |
| | 6 | | 0511136700D | 1.00 | SLITTA | SLIDE | COULISSE | SCHLITTEN | CORREDERA |
| | 6 | | 0522730137C | 1.00 | SLITTA | SLIDE | COULISSE | SCHLITTEN | CORREDERA |
| | 6 | | 0522732008B | 1.00 | SLITTA | SLIDE | COULISSE | SCHLITTEN | CORREDERA |
| | 7 | | 0000644273H | 1.00 | ANELLO SEEGER | CIRCLIP | CIRCLIP | SEEGERRING | SEEGER |
| | 8 | | 0321930303A | 1.00 | PERNO | PIN | PIVOT | STIFT | PERNO |
| | 9 | | 0321930305E | 1.00 | BANDIERA MOTORE | SUPPORT | SUPPORT | MOTOR WIPPE | BANDERA |
| | 9 | | 0321930306G | 1.00 | BANDIERA MOTORE | SUPPORT | SUPPORT | MOTOR WIPPE | BANDERA |
| | 10 | | 0001314114D | 1.00 | MOTORE TRIF. | 3-PH. MOTOR | 3-PH. MOTEUR | 3-PH. MOTOR | MOT.TRIFAS. |
| | 10 | | 0001314119E | 1.00 | MOTORE TRIF. | 3-PH. MOTOR | 3-PH. MOTEUR | 3-PH. MOTOR | MOT.TRIFAS. |
| | 10 | | 0001314196G | 1.00 | MOTORE TRIF. | 3.PH MOTOR | 3 PH. MOTEUR | 3-PH MOTOR | MOT. TRIFAS |
| | 10 | | 0001314384F | 1.00 | MOTORE TRIF. | 3.PH MOTOR | 3 PH. MOTEUR | 3-PH MOTOR | MOT. TRIFAS |
| | 10 | | 0001315065A | 1.00 | MOTORE TRIF. | 3.PH MOTOR | 3 PH. MOTEUR | 3-PH MOTOR | MOT. TRIFAS |
| | 10 | | 0001315067E | 1.00 | MOTORE TRIF. | 3.PH MOTOR | 3 PH. MOTEUR | 3-PH MOTOR | MOT. TRIFAS |
| | 10 | | 0001315068G | 1.00 | MOTORE TRIF. | 3-PH. MOTORS | 3-PH. MOTEURS | 3-PH. MOTOREN | MOT.TRIFAS. |
| | 10 | | 0001315069L | 1.00 | MOTORE TRIF. | 3-PH. MOTOR | 3-PH. MOTEUR | 3-PH. MOTOR | MOT.TRIFAS. |
| | 10 | | 0001315074L | 1.00 | MOTORE TRIF. | 3.PH MOTOR | 3 PH. MOTEUR | 3-PH MOTOR | MOT. TRIFAS |
| | 10 | | 0001315106H | 1.00 | MOTORE TRIF. | 3.PH MOTOR | 3 PH. MOTEUR | 3-PH MOTOR | MOT. TRIFAS |
| | 10 | | 0001315107A | 1.00 | MOTORE TRIF. | 3.PH MOTOR | 3 PH. MOTEUR | 3-PH MOTOR | MOT. TRIFAS |
| | 10 | | 0001315109E | 1.00 | MOTORE TRIF. | 3-PH. MOTOR | 3-PH. MOTEUR | 3-PH. MOTOR | MOT.TRIFAS. |
| | 10 | | 0001315110F | 1.00 | MOTORE TRIF. | 3-PH. MOTOR | 3-PH. MOTEUR | 3-PH. MOTOR | MOT.TRIFAS. |
| | 10 | | 0001315162F | 1.00 | MOTORE TRIF. | 3.PH MOTOR | 3 PH. MOTEUR | 3-PH MOTOR | MOT. TRIFAS |
| | 10 | | 0001315195F | 1.00 | MOTORE TRIF. | 3.PH MOTOR | 3 PH. MOTEUR | 3-PH MOTOR | MOT. TRIFAS |
| | 10 | | 0001315199E | 1.00 | MOTORE TRIF. | 3.PH MOTOR | 3 PH. MOTEUR | 3-PH MOTOR | MOT. TRIFAS |
| | 10 | | 0001315224H | 1.00 | MOTORE TRIF. | 3.PH MOTOR | 3 PH. MOTEUR | 3-PH MOTOR | MOT. TRIFAS |
| | 10 | | 0001331049G | 1.00 | MOTORE TRIF. FRENO C.C. | 3-PH. MOTOR D.C. BRAKE | MOTEUR 3-PH . FREIN C.C | 3-PH. MOTOR G.S. BREMSE | MOT. TRIFAS. FR. C.C. |
| | 10 | | 0001331056B | 1.00 | MOTORE TRIF. FRENO C.C. | 3-PH. MOTOR C.C. BRAKE | 3-PH. MOTEUR FREIN C.C. | 3-PH. MOTOR C.C. BREMSE | MOT.TRIFAS.FR.C.C. |
| | 10 | | 0001331059H | 1.00 | MOTORE TRIF. FRENO C.C. | 3-PH. MOTOR C.C. BRAKE | 3-PH. MOTEUR FREIN C.C. | 3-PH. MOTOR C.C. BREMSE | MOT.TRIFAS.FR.C.C. |
| | 10 | | 0001331088L | 1.00 | MOTORE TRIF. FRENO C.C. | 3-PH. MOTOR C.C. BRAKE | 3-PH. MOTEUR FREIN C.C. | 3-PH. MOTOR C.C. BREMSE | MOT.TRIFAS.FR.C.C. |
| | 10 | | 0001331137D | 1.00 | MOTORE TRIF. FRENO C.C. | 3-PH. MOTOR D.C. BRAKE | MOTEUR 3-PH . FREIN C.C | 3-PH. MOTOR G.S. BREMSE | MOT. TRIFAS. FR. C.C. |
| | 10 | | 0001331153G | 1.00 | MOTORE TRIF. FRENO C.C. | 3-PH. MOTOR D.C. BRAKE | 3-PH. MOTEUR FREIN C.C. | 3-PH. MOTOR G.S. BREMSE | MOT.TRIFAS.FR.C.C. |
| | 10 | | 0001331156D | 1.00 | MOTORE TRIF. FRENO C.C. | 3-PH. MOTOR D.C. BRAKE | MOTEUR 3-PH . FREIN C.C | 3-PH. MOTOR G.S. BREMSE | MOT. TRIFAS. FR. C.C. |
| | 10 | | 0001331157F | 1.00 | MOTORE TRIF. FRENO C.C. | 3-PH. MOTOR D.C. BRAKE | MOTEUR 3-PH . FREIN C.C | 3-PH. MOTOR G.S. BREMSE | MOT. TRIFAS. FR. C.C. |
| | 10 | | 0001331158H | 1.00 | MOTORE TRIF. FRENO C.C. | 3-PH. MOTOR D.C. BRAKE | MOTEUR 3-PH . FREIN C.C | 3-PH. MOTOR G.S. BREMSE | MOT. TRIFAS. FR. C.C. |
| | 10 | | 0001331204F | 1.00 | MOTORE TRIF. FRENO C.C. | 3-PH. MOTOR D.C. BRAKE | MOTEUR 3-PH . FREIN C.C | 3-PH. MOTOR G.S. BREMSE | MOT. TRIFAS. FR. C.C. |

| N | P | C | CODICE | Q.TY | DENOMINAZIONE | DESCRIPTION | DESIGNATION | BEZEICHNUNG | DENOMINACION |
|---|---|---|---|---|---|---|---|---|---|
| | 10 | | 0001331207C | 1.00 | MOTORE TRIF. FRENO C.C. | 3-PH. MOTOR D.C. BRAKE | MOTEUR 3-PH . FREIN C.C | 3-PH. MOTOR G.S. BREMSE | MOT. TRIFAS. FR. C.C. |
| | 10 | | 0001331209G | 1.00 | MOTORE TRIF. FRENO C.C. | 3-PH. MOTOR D.C. BRAKE | MOTEUR 3-PH . FREIN C.C | 3-PH. MOTOR G.S. BREMSE | MOT. TRIFAS. FR. C.C. |
| | 10 | | 0001331211A | 1.00 | MOTORE TRIF. FRENO C.C. | 3-PH. MOTOR D.C. BRAKE | MOTEUR 3-PH . FREIN C.C | 3-PH. MOTOR G.S. BREMSE | MOT. TRIFAS. FR. C.C. |
| | 10 | | 0001331212C | 1.00 | MOTORE TRIF. FRENO C.C. | 3-PH. MOTOR D.C. BRAKE | MOTEUR 3-PH . FREIN C.C | 3-PH. MOTOR G.S. BREMSE | MOT. TRIFAS. FR. C.C. |
| | 10 | | 0001331223F | 1.00 | MOTORE TRIF. FRENO C.C. | 3-PH. MOTOR D.C. BRAKE | MOTEUR 3-PH . FREIN C.C | 3-PH. MOTOR G.S. BREMSE | MOT. TRIFAS. FR. C.C. |
| | 10 | | 0001331226C | 1.00 | MOTORE TRIF. FRENO C.C. | 3-PH. MOTOR D.C. BRAKE | MOTEUR 3-PH . FREIN C.C | 3-PH. MOTOR G.S. BREMSE | MOT. TRIFAS. FR. C.C. |
| | 10 | | 0001331227E | 1.00 | MOTORE TRIF. FRENO C.C. | 3-PH. MOTOR D.C. BRAKE | MOTEUR 3-PH . FREIN C.C | 3-PH. MOTOR G.S. BREMSE | MOT. TRIFAS. FR. C.C. |
| | 10 | | 0001331228G | 1.00 | MOTORE TRIF. FRENO C.C. | 3-PH. MOTOR D.C. BRAKE | MOTEUR 3-PH . FREIN C.C | 3-PH. MOTOR G.S. BREMSE | MOT. TRIFAS. FR. C.C. |
| | 10 | | 0001331229L | 1.00 | MOTORE TRIF. FRENO C.C. | 3-PH. MOTOR C.C. BRAKE | 3-PH. MOTEUR FREIN C.C. | 3-PH. MOTOR C.C. BREMSE | MOT.TRIFAS.FR.C.C. |
| | 10 | | 0001331238H | 1.00 | MOTORE TRIF. FRENO C.C. | 3-PH. MOTOR D.C. BRAKE | MOTEUR 3-PH . FREIN C.C | 3-PH. MOTOR G.S. BREMSE | MOT. TRIFAS. FR. C.C. |
| | 10 | | 0001331242F | 1.00 | MOTORE TRIF. FRENO C.C. | 3-PH. MOTOR D.C. BRAKE | MOTEUR 3-PH . FREIN C.C | 3-PH. MOTOR G.S. BREMSE | MOT. TRIFAS. FR. C.C. |
| | 10 | | 0001331243H | 1.00 | MOTORE TRIF. FRENO C.C. | 3-PH. MOTOR D.C. BRAKE | MOTEUR 3-PH . FREIN C.C | 3-PH. MOTOR G.S. BREMSE | MOT. TRIFAS. FR. C.C. |
| | 10 | | 0001331244A | 1.00 | MOTORE TRIF. FRENO C.C. | 3-PH. MOTOR D.C. BRAKE | MOTEUR 3-PH . FREIN C.C | 3-PH. MOTOR G.S. BREMSE | MOT. TRIFAS. FR. C.C. |
| | 10 | | 0001331554H | 1.00 | MOTORE TRIF. FRENO C.C. | 3-PH. MOTOR D.C. BRAKE | MOTEUR 3-PH . FREIN C.C | 3-PH. MOTOR G.S. BREMSE | MOT. TRIFAS. FR. C.C. |
| | 10 | | 0001331555A | 1.00 | MOTORE TRIF. FRENO C.C. | 3-PH. MOTOR D.C. BRAKE | MOTEUR 3-PH . FREIN C.C | 3-PH. MOTOR G.S. BREMSE | MOT. TRIFAS. FR. C.C. |
| | 10 | | 0001331556C | 1.00 | MOTORE TRIF. FRENO C.C. | 3-PH. MOTOR D.C. BRAKE | MOTEUR 3-PH . FREIN C.C | 3-PH. MOTOR G.S. BREMSE | MOT. TRIFAS. FR. C.C. |
| | 10 | | 0001334193E | 1.00 | MOTORE TRIF. | 3.PH MOTOR | 3 PH. MOTEUR | 3-PH MOTOR | MOT. TRIFAS |
| | 10 | | 0001334195L | 1.00 | MOTORE TRIF. | 3.PH MOTOR | 3 PH. MOTEUR | 3-PH MOTOR | MOT. TRIFAS |
| | 10 | | 0001334199H | 1.00 | MOTORE TRIF. | 3.PH MOTOR | 3 PH. MOTEUR | 3-PH MOTOR | MOT. TRIFAS |
| | 10 | | 0001337670A | 1.00 | MOTORE TRIF. | 3.PH MOTOR | 3 PH. MOTEUR | 3-PH MOTOR | MOT. TRIFAS |
| | 10 | | 0001337721L | 1.00 | MOTORE TRIF. | 3.PH MOTOR | 3 PH. MOTEUR | 3-PH MOTOR | MOT. TRIFAS |
| | 10 | | 0001337722B | 1.00 | MOTORE TRIF. | 3.PH MOTOR | 3 PH. MOTEUR | 3-PH MOTOR | MOT. TRIFAS |
| | 10 | | 0001337727C | 1.00 | MOTORE TRIF. | 3.PH MOTOR | 3 PH. MOTEUR | 3-PH MOTOR | MOT. TRIFAS |
| | 10 | | 0001337728E | 1.00 | MOTORE TRIF. | 3.PH MOTOR | 3 PH. MOTEUR | 3-PH MOTOR | MOT. TRIFAS |
| | 10 | | 0001337730H | 1.00 | MOTORE TRIF. FRENO C.C. | 3-PH. MOTOR D.C. BRAKE | MOTEUR 3-PH . FREIN C.C | 3-PH. MOTOR G.S. BREMSE | MOT. TRIFAS. FR. C.C. |
| | 10 | | 0001337738F | 1.00 | MOTORE TRIF. | 3.PH MOTOR | 3 PH. MOTEUR | 3-PH MOTOR | MOT. TRIFAS |
| | 10 | | 0001337739H | 1.00 | MOTORE TRIF. | 3.PH MOTOR | 3 PH. MOTEUR | 3-PH MOTOR | MOT. TRIFAS |
| | 10 | | 0001337757F | 1.00 | MOTORE TRIF. FRENO C.C. | 3-PH. MOTOR D.C. BRAKE | MOTEUR 3-PH . FREIN C.C | 3-PH. MOTOR G.S. BREMSE | MOT. TRIFAS. FR. C.C. |
| | 10 | | 0001337758H | 1.00 | MOTORE TRIF. FRENO C.C. | 3-PH. MOTOR D.C. BRAKE | MOTEUR 3-PH . FREIN C.C | 3-PH. MOTOR G.S. BREMSE | MOT. TRIFAS. FR. C.C. |
| | 10 | | 0001337759A | 1.00 | MOTORE TRIF. FRENO C.C. | 3-PH. MOTOR D.C. BRAKE | MOTEUR 3-PH . FREIN C.C | 3-PH. MOTOR G.S. BREMSE | MOT. TRIFAS. FR. C.C. |
| | 10 | | 0001337760B | 1.00 | MOTORE TRIF. FRENO C.C. | 3-PH. MOTOR D.C. BRAKE | MOTEUR 3-PH . FREIN C.C | 3-PH. MOTOR G.S. BREMSE | MOT. TRIFAS. FR. C.C. |
| | 10 | | 0001337763H | 1.00 | MOTORE TRIF. FRENO C.C. | 3-PH. MOTOR D.C. BRAKE | MOTEUR 3-PH . FREIN C.C | 3-PH. MOTOR G.S. BREMSE | MOT. TRIFAS. FR. C.C. |
| | 10 | | 0001337764A | 1.00 | MOTORE TRIF. FRENO C.C. | 3-PH. MOTOR D.C. BRAKE | MOTEUR 3-PH . FREIN C.C | 3-PH. MOTOR G.S. BREMSE | MOT. TRIFAS. FR. C.C. |
| | 10 | | 0001337793B | 1.00 | MOTORE TRIF. FRENO C.C. | 3-PH. MOTOR D.C. BRAKE | MOTEUR 3-PH . FREIN C.C | 3-PH. MOTOR G.S. BREMSE | MOT. TRIFAS. FR. C.C. |
| | 10 | | 0001337793B | 1.00 | MOTORE TRIF. FRENO C.C. | 3-PH. MOTOR D.C. BRAKE | MOTEUR 3-PH . FREIN C.C | 3-PH. MOTOR G.S. BREMSE | MOT. TRIFAS. FR. C.C. |
| | 10 | | 0001337805H | 1.00 | MOTORE TRIF. | 3.PH MOTOR | 3 PH. MOTEUR | 3-PH MOTOR | MOT. TRIFAS |
| | 10 | | 0001337806A | 1.00 | MOTORE TRIF. | 3.PH MOTOR | 3 PH. MOTEUR | 3-PH MOTOR | MOT. TRIFAS |
| | 10 | | 0001337808E | 1.00 | MOTORE TRIF. FRENO C.C. | 3-PH. MOTOR D.C. BRAKE | MOTEUR 3-PH . FREIN C.C | 3-PH. MOTOR G.S. BREMSE | MOT. TRIFAS. FR. C.C. |
| | 10 | | 0001337809G | 1.00 | MOTORE TRIF. FRENO C.C. | 3-PH. MOTOR D.C. BRAKE | MOTEUR 3-PH . FREIN C.C | 3-PH. MOTOR G.S. BREMSE | MOT. TRIFAS. FR. C.C. |
| | 10 | | 0001337814G | 1.00 | MOTORE TRIF. | 3.PH MOTOR | 3 PH. MOTEUR | 3-PH MOTOR | MOT. TRIFAS |

| N | P | C | CODICE | Q.TY | DENOMINAZIONE | DESCRIPTION | DESIGNATION | BEZEICHNUNG | DENOMINACION |
|---|---|---|---|---|---|---|---|---|---|
| | 10 | | 0001337816B | 1.00 | MOTORE TRIF. | 3.PH MOTOR | 3 PH. MOTEUR | 3-PH MOTOR | MOT. TRIFAS |
| | 10 | | 0001337817D | 1.00 | MOTORE TRIF. | 3.PH MOTOR | 3 PH. MOTEUR | 3-PH MOTOR | MOT. TRIFAS |
| | 10 | | 0001337818F | 1.00 | MOTORE TRIF. | 3.PH MOTOR | 3 PH. MOTEUR | 3-PH MOTOR | MOT. TRIFAS |
| | 11 | | 0319461185H | 4.00 | DISTANZIALE | SPACER | ENTRETOISE | DISTANZSTUECK | DISTANCIADOR |
| | 12 | | 0000600476F | 1.00 | CINGHIA PIATTA | FLAT BELT | COURROIE PLATE | FLACHRIEMEN | CORREA PLANA |
| | 12 | | 0000604133C | 1.00 | CINGHIA PIATTA | FLAT BELT | COURROIE PLATE | FLACHRIEMEN | CORREA PLANA |
| | 12 | | 0000605364D | 1.00 | CINGHIA PIATTA | FLAT BELT | COURROIE PLATE | FLACHRIEMEN | CORREA PLANA |
| | 12 | | 0000605365F | 1.00 | CINGHIA PIATTA | FLAT BELT | COURROIE PLATE | FLACHRIEMEN | CORREA PLANA |
| | 12 | | 0000605366H | 1.00 | CINGHIA PIATTA | FLAT BELT | COURROIE PLATE | FLACHRIEMEN | CORREA PLANA |
| | 12 | | 0000605367A | 1.00 | CINGHIA PIATTA | FLAT BELT | COURROIE PLATE | FLACHRIEMEN | CORREA PLANA |
| | 12 | | 0000605388E | 1.00 | CINGHIA PIATTA | FLAT BELT | COURROIE PLATE | FLACHRIEMEN | CORREA PLANA |
| | 12 | | 0000605389G | 1.00 | CINGHIA PIATTA | FLAT BELT | COURROIE PLATE | FLACHRIEMEN | CORREA PLANA |
| | 13 | | 0319431161A | 1.00 | PULEGGIA | PULLEY | POULIE | RIEMENSCHEIBE | POLEA |
| | 13 | | 0319431162C | 1.00 | PULEGGIA | PULLEY | POULIE | RIEMENSCHEIBE | POLEA |
| | 13 | | 0319431163E | 1.00 | PULEGGIA | PULLEY | POULIE | RIEMENSCHEIBE | POLEA |
| | 13 | | 0319431164G | 1.00 | PULEGGIA | PULLEY | POULIE | RIEMENSCHEIBE | POLEA |
| | 13 | | 0319431166B | 1.00 | PULEGGIA | PULLEY | POULIE | RIEMENSCHEIBE | POLEA |
| | 13 | | 0319431167D | 1.00 | PULEGGIA | PULLEY | POULIE | RIEMENSCHEIBE | POLEA |
| | 13 | | 0319431168F | 1.00 | PULEGGIA | PULLEY | POULIE | RIEMENSCHEIBE | POLEA |
| | 13 | | 0319431169H | 1.00 | PULEGGIA | PULLEY | POULIE | RIEMENSCHEIBE | POLEA |
| | 14 | | 0000305249G | 1.00 | RONDELLA | WASHER | RONDELLE | SCHEIBE | ARANDELA |
| | 14 | | 0319431135F | 1.00 | RONDELLA | WASHER | RONDELLE | SCHEIBE | ARANDELA |
| | 15 | | 0000310246G | 1.00 | VITE | SCREW | VIS | SCHRAUBE | TORNILLO |
| | 15 | | 0000310363E | 1.00 | VITE | SCREW | VIS | SCHRAUBE | TORNILLO |
| | 16 | | 0322732021D | 1.00 | STAFFA | BRACKET | BRIDE | BUEGEL | ABRAZADERA |

227-1305

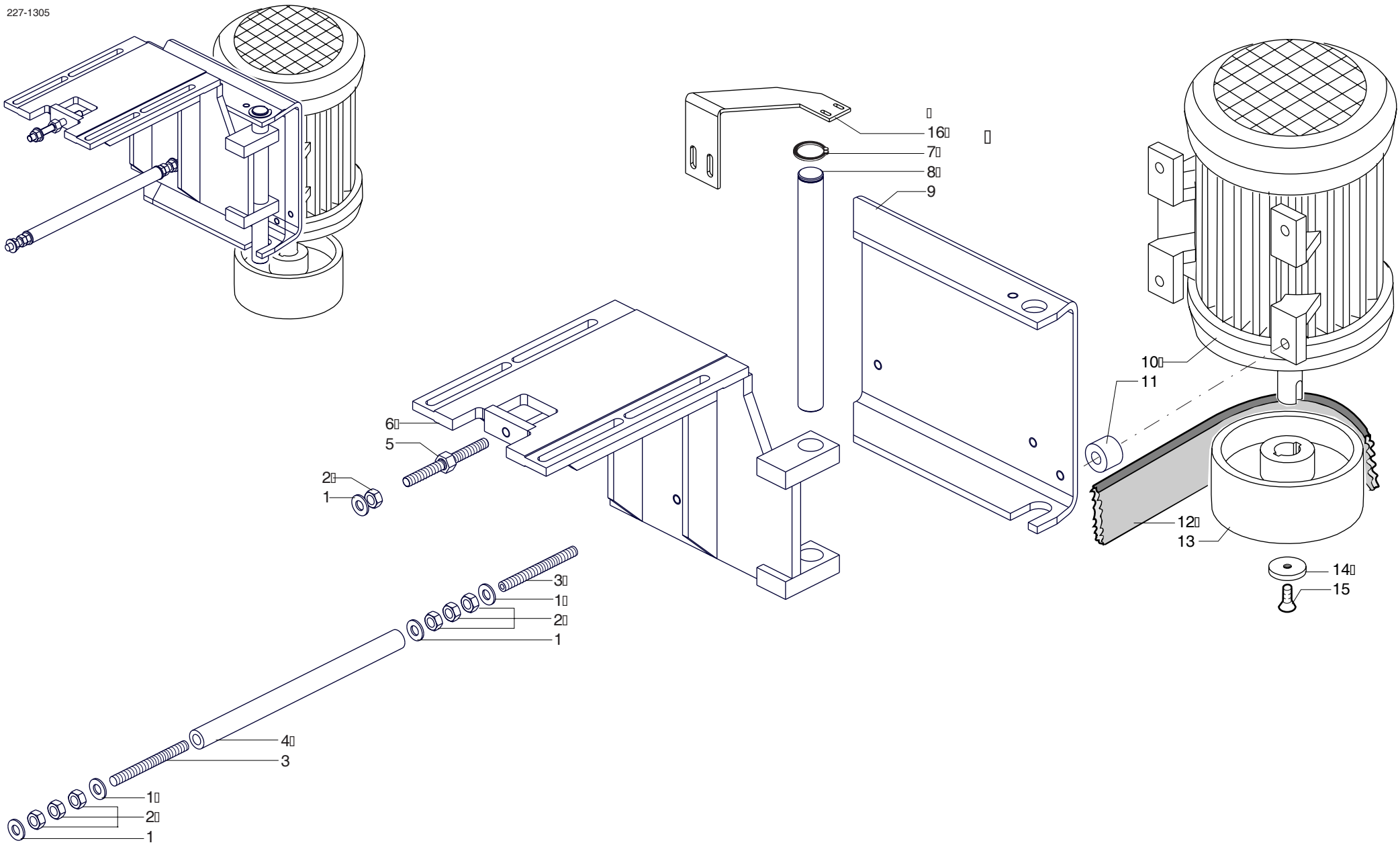


| | | | |
|---|---|---|---|
| scm | SUPERSET XL | MOTORIZZAZIONE - (01.01.1901 -> - p.20,06,2007)<br>MOTORIZATION - MOTORISATION<br>MOTORISIERUNG - MOTORIZACION | 227-1305-0 |

| scm | SUPERSET XL | POSIZIONAMENTO VERTICALE - (p.20,06,2007)<br>VERTICAL ADJUSTMENT - REGLAGE VERTICAL<br>VERTIKALVERSTELLUNG - UBICATION VERTICAL | 227-1306-0 |
|---|---|---|---|

| N | P | C | CODICE | Q.TY | DENOMINAZIONE | DESCRIPTION | DESIGNATION | BEZEICHNUNG | DENOMINACION |
|---|---|---|---|---|---|---|---|---|---|
| | 01.01.1901 -> 01.01.3000 | | | | Note: 2822730140G | | | | |
| | 1 | | 0000613033B | 2.00 | GABBIA A RULLINI | ROLLER CAGE | CAGE A ROULEAUX | WALZENKAEFIG | COJINETE |
| | 2 | | 0000613034D | 4.00 | RALLA | WASHER | CRAPAUDINE | SCHEIBE | RANGUA |
| | 3 | | 0316030500H | 1.00 | BOCCOLA | BUSHING | DOUILLE | BUCHSE | CASQUILLO |
| | 4 | | 0310130604G | 1.00 | SCATOLA DI RINVIO | TRANSFER CASE | BOITE | VORGELEGEKASTEN | CAJA |
| | 5 | | 0319430904G | 1.00 | CORONA DENTATA | GEAR WHEEL | COURONNE DENTEE | ZAHNRAD | RUEDA DENTADA |
| | 6 | | 0322730141F | 1.00 | VITE | SCREW | VIS | SCHRAUBE | TORNILLO |
| | 7 | | 0000645045F | 1.00 | LINGUETTA | FEATHER KEY | LANGUETTE | FEDERKEIL | LINGUETA |
| | 8 | | 0316030800E | 1.00 | VITE SENZA FINE | WORM | VIS SANS FIN | SCHNECKE | TORNILO SIN FIN |
| | 8 | | 0322790313E | 1.00 | VITE SENZA FINE | WORM | VIS SANS FIN | SCHNECKE | TORNILO SIN FIN |
| | 9 | | 0000606100E | 1.00 | CUSCINETTO | BEARING | ROULEMENT | LAGER | COJINETE |
| | 10 | | 0316031000H | 1.00 | DISTANZIALE | SPACER | ENTRETOISE | DISTANZSTUECK | DISTANCIADOR |
| | 11 | | 0000644043A | 1.00 | ANELLO SEEGER | CIRCLIP | CIRCLIP | SEEGERRING | SEEGER |
| | 12 | | 0000644268H | 1.00 | ANELLO SEEGER | CIRCLIP | CIRCLIP | SEEGERRING | SEEGER |
| | 13 | | 0722732012D | 1.00 | VITE+CHIOC.RIC | SCREW + LEAD NUT | VIS + ECROU (DESSIN) | SCHNECKE +MUTTER (ZEICHN. | TORN+TUER A DIBUJO |

227-1205

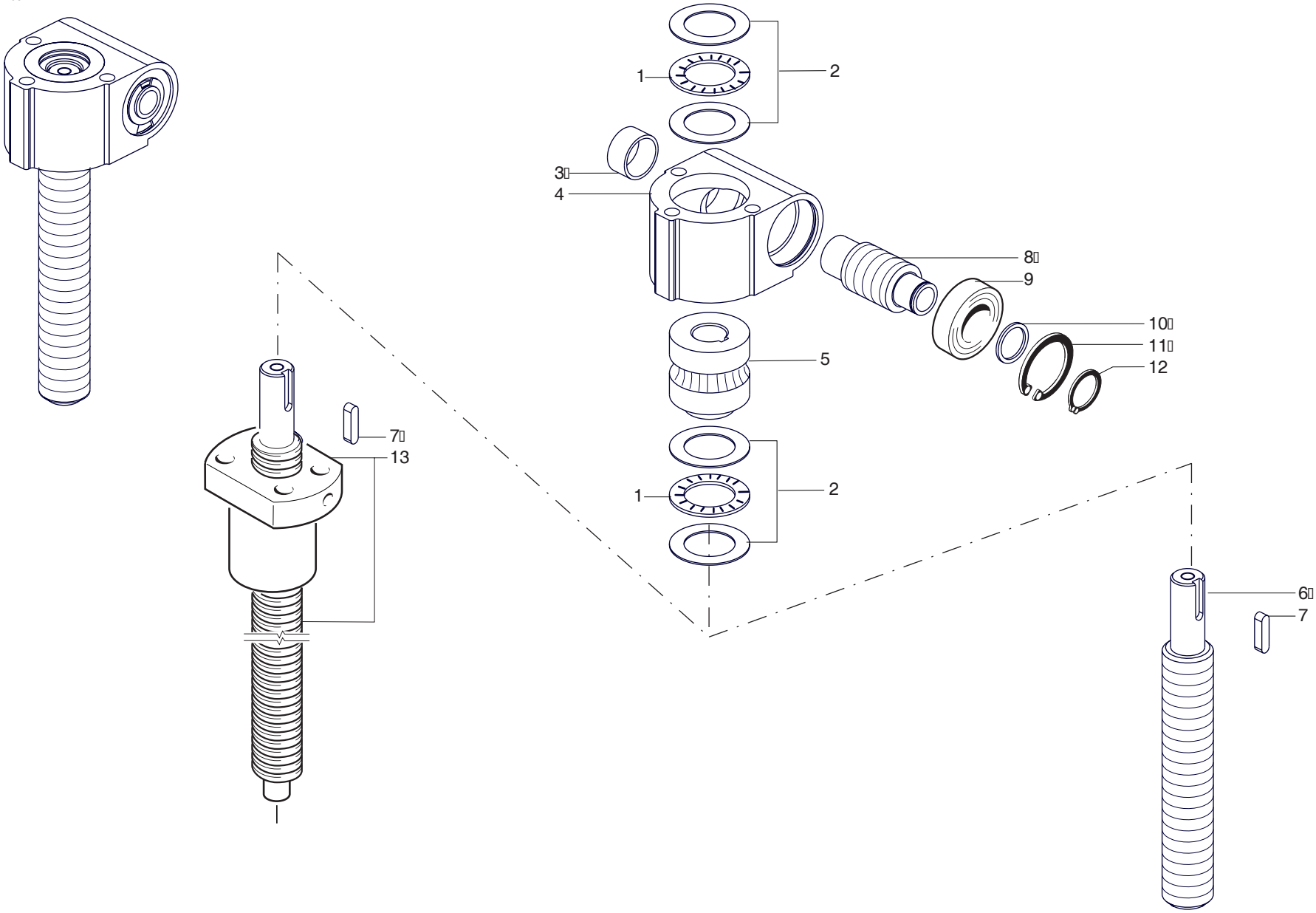


| | | | |
|---|---|---|---|
| scm | SUPERSET XL | POSIZIONAMENTO VERTICALE - (01.01.1901 -> - p.20,06,2007)<br>VERTICAL ADJUSTMENT - REGLAGE VERTICAL<br>VERTIKALVERSTELLUNG - UBICATION VERTICAL | 227-1306-0 |

| N | P | C | CODICE | Q.TY | DENOMINAZIONE | DESCRIPTION | DESIGNATION | BEZEICHNUNG | DENOMINACION |
|---|---|---|---|---|---|---|---|---|---|
| | 01.01.1901 -> 01.01.3000 | | | | Note: 2822730050F | | | | |
| | 1 | | 0000635035C | 1.00 | INDICATORE NUMERICO | INDICATOR | INDICATEUR | ANZEIGER | INDICADOR NUMERICO |
| | 1 | | 0000635137L | 1.00 | INDICATORE NUMERICO | INDICATOR | INDICATEUR | ANZEIGER | INDICADOR NUMERICO |
| | 1 | | 0766580007D | 1.00 | INDICATORE NUMERICO LIKA | INDICATOR | INDICATEUR | ANZEIGER | INDICADOR NUMERICO |
| | 2 | | 0522730170B | 1.00 | FLANGIA | FLANGE | FLASQUE | FLANSCH | BRIDA |
| | 3 | | 0000613041H | 2.00 | GABBIA A RULLINI | ROLLER CAGE | CAGE A ROULEAUX | WALZENKAEFIG | COJINETE |
| | 4 | | 0316330020C | 1.00 | RONDELLA | WASHER | RONDELLE | SCHEIBE | ARANDELA |
| | 5 | | 0000613045G | 4.00 | RALLA | WASHER | CRAPAUDINE | SCHEIBE | RANGUA |
| | 6 | | 0322730171L | 1.00 | BOCCOLA | BUSHING | DOUILLE | BUCHSE | CASQUILLO |
| | 7 | | 0511136704C | 1.00 | ASTA | ROD | TIGE | STANGE | ASTA |
| | 7 | | 0522730143E | 1.00 | ASTA | ROD | TIGE | STANGE | ASTA |
| | 8 | | 0322775011E | 1.00 | TARGA | PLATE | PLAQUE | SCHILD | TARJETA |
| | 9 | | 0319013512L | 1.00 | POMELLO | BALL GRIP | POIGNEE | KUGELGRIFF | POMO |
| | 10 | | 0322775032L | 1.00 | TARGA | RATING PLATE | PLAQUE | SCHILD | TARJETA |

227-1307

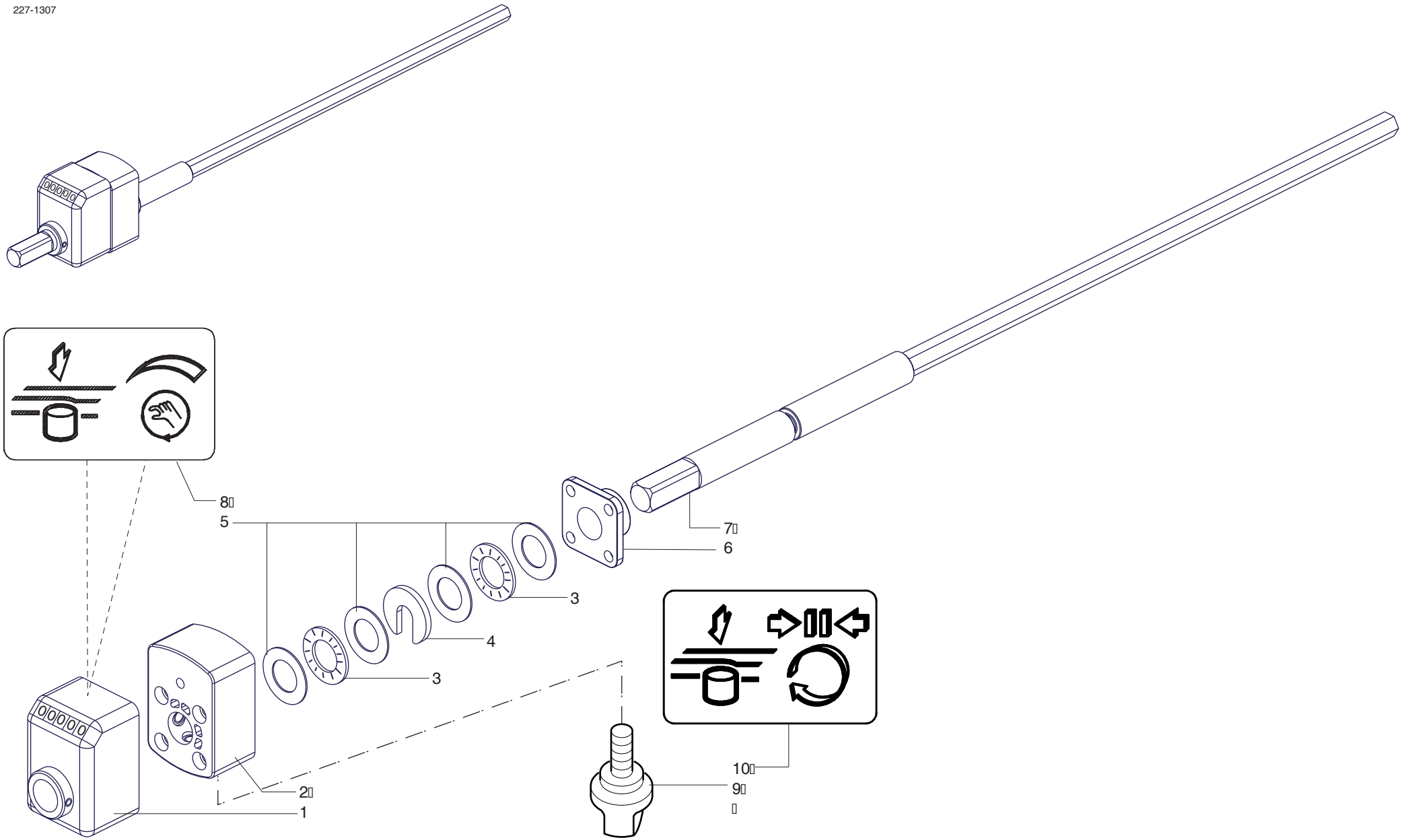


| scm | SUPERSET XL | POSIZIONAMENTO VERTICALE MANUALE - (01.01.1901 ->  - p.20,06,2007)<br>MANUAL VERTICAL ADJUSTMENT - REGLAGE VERTICAL MANUEL<br>MANUELLE VERTIKALVERSTELLUNG - UBICACION VERTICAL MANUAL | 227-1307-0 |
|---|---|---|---|

| N | P | C | CODICE | Q.TY | DENOMINAZIONE | DESCRIPTION | DESIGNATION | BEZEICHNUNG | DENOMINACION |
|---|---|---|---|---|---|---|---|---|---|
| | 01.01.1901 -> 01.01.3000 | | | | Note: 2822730070H | | | | |
| 1 | | | 0000635039B | 1.00 | INDICATORE NUMERICO | INDICATOR | INDICATEUR | ANZEIGER | INDICADOR |
| 1 | | | 0000635270A | 1.00 | INDICATORE NUMERICO | INDICATOR | INDICATEUR | ANZEIGER | INDICADOR NUMERICO |
| 2 | | | 0522730170B | 1.00 | FLANGIA | FLANGE | FLASQUE | FLANSCH | BRIDA |
| 3 | | | 0000613041H | 2.00 | GABBIA A RULLINI | ROLLER CAGE | CAGE A ROULEAUX | WALZENKAEFIG | COJINETE |
| 4 | | | 0316330020C | 1.00 | RONDELLA | WASHER | RONDELLE | SCHEIBE | ARANDELA |
| 5 | | | 0000613045G | 4.00 | RALLA | WASHER | CRAPAUDINE | SCHEIBE | RANGUA |
| 6 | | | 0322730171L | 1.00 | BOCCOLA | BUSHING | DOUILLE | BUCHSE | CASQUILLO |
| 7 | | | 0311136705A | 1.00 | VITE | SCREW | VIS | SCHRAUBE | TORNILLO |
| 7 | | | 0322730147L | 1.00 | VITE | SCREW | VIS | SCHRAUBE | TORNILLO |
| 8 | | | 0322775012G | 1.00 | TARGA | PLATE | PLAQUE | SCHILD | TARJETA |
| 9 | | | 0319013512L | 1.00 | POMELLO | BALL GRIP | POIGNEE | KUGELGRIFF | POMO |
| 10 | | | 0322775033B | 1.00 | TARGA | RATING PLATE | PLAQUE | SCHILD | TARJETA |
| 11 | | | 0322732224E | 1.00 | STELO | STEM | TIGE | SCHAFT | VASTAGO |
| 12 | | | 0000644256C | 1.00 | ANELLO SEEGER | CIRCLIP | CIRCLIP | SEEGERRING | SEEGER |
| 13 | | | 0322732223C | 1.00 | FLANGIA | FLANGE | FLASQUE | FLANSCH | BRIDA |
| 14 | | | 0322732225G | 1.00 | COPERTURA | COVER | COUVERCLE | DECKEL | CUBIERTA |
| 15 | | | 2722732211H | 1.00 | ASS. VALVOLE | VALVE UNIT | ENSEMBLE VALVES | VENTILE-EINHEIT | CONJ. VALVULAS |
| 16 | | | 0322732226L | 1.00 | SUPPORTO | SUPPORT | SUPPORT | STUETZE | SOPORTE |
| 17 | | | 0001509675L | 1.00 | VALVOLA | VALVE | SOUPAPE | VENTIL | VALVULA |
| 18 | | | 0001508862E | 1.00 | VALVOLA | VALVE | VALVE | VENTIL | VALV. |
| 19 | | | 0001509714C | 4.00 | VALVOLA | VALVE | SOUPAPE | VENTIL | VALVULA |
| 20 | | | 0001500415H | 2.00 | VALVOLA | VALVE | SOUPAPE | VENTIL | VALVULA |
| 21 | | | 0001509131E | 1.00 | VALVOLA | VALVE | VALVE | VENTIL | VALV. |
| 22 | | | 0001502498F | 2.00 | VALVOLA | VALVE | VALVE | VENTIL | VALV. |

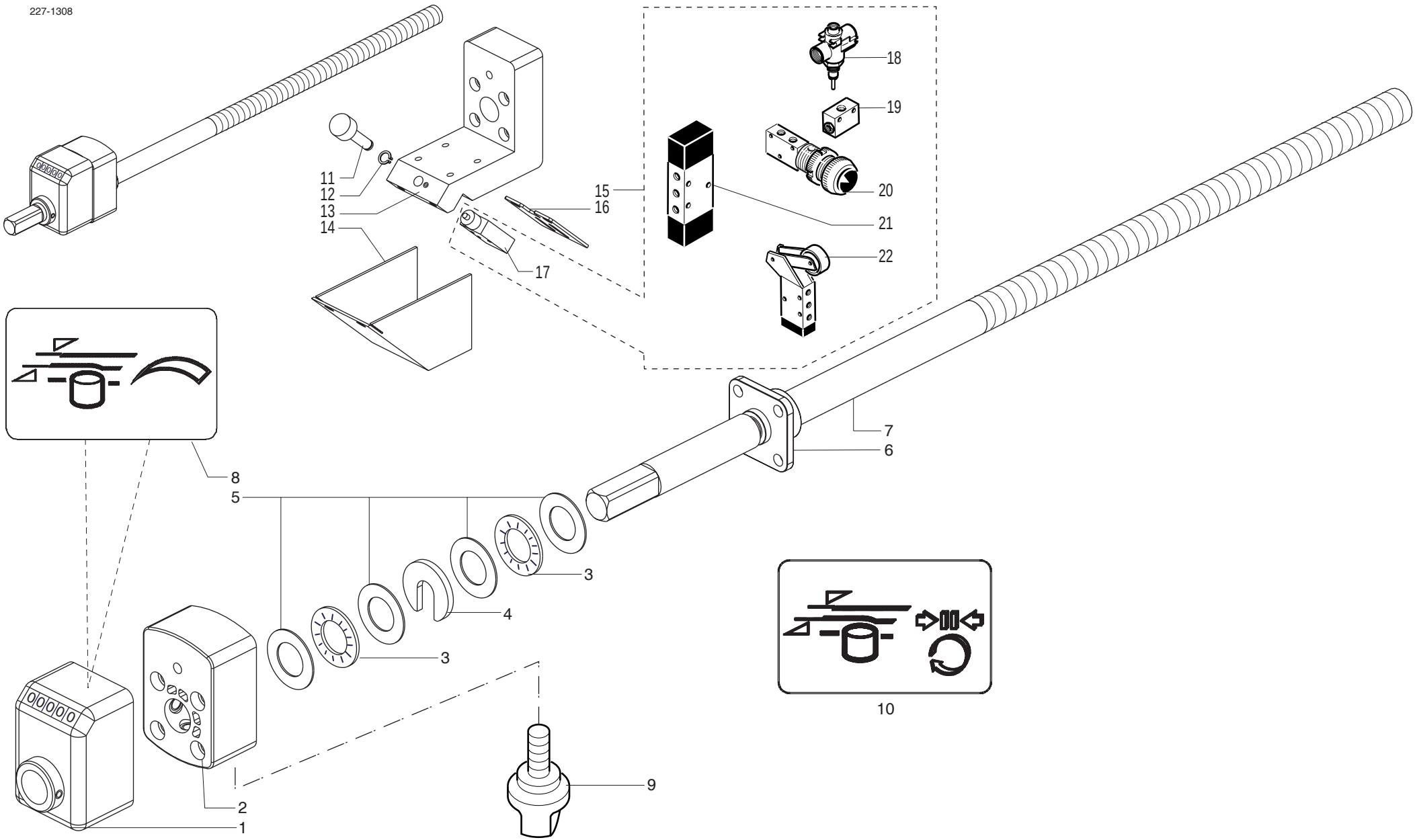


| scm | SUPERSET XL | POSIZIONAMENTO ORIZZONTALE MANUALE - (01.01.1901 -> - p.20,06,2007)<br>MANUAL HORIZONTAL ADJUSTMENT - REGLAGE HORIZONTAL MANUEL<br>MANUELLE HORIZONTALVERSTELLUNG - UBICACION HORIZONTAL MANUAL | 227-1308-0 |
|---|---|---|---|

| scm | SUPERSET XL | POSIZIONAMENTO ORIZZONTALE ASSE CONTINUO - (p.20,06,2007)<br>CONTINUOUS AXIS HORIZONTAL ADJUSTING - REGLAGE HORIZONTAL AXE CONTINU<br>HORIZONTALVERSTELLUNG MIT KONT. ACHSE - UBICACION HORIZONTAL A EJE CONTINUO | 227-1309-0 |
|---|---|---|---|

| N | P | C | CODICE | Q.TY | DENOMINAZIONE | DESCRIPTION | DESIGNATION | BEZEICHNUNG | DENOMINACION |
|---|---|---|---|---|---|---|---|---|---|
| | 01.01.1901 -> 01.01.3000 | | | | Note: 2822732000C | | | | |
| 1 | | | 0319434402F | 1.00 | CARTER | COVER | CARTER | GEHAEUSE | CARTER |
| 2 | | | 0733521168C | 1.00 | ASS.ENCODER 100IMP/G | ASS.ENCODER 100IMP/G | ASS.ENCODER 100IMP/G | ASS.ENCODER 100IMP/G | ASS.ENCODER 100IMP/G |
| 2 | | | 0739736140F | 1.00 | ENCODER | ENCODER | ENCODER | ENCODER | ENCODER |
| 2 | | | 0739736141H | 1.00 | ENCODER | ENCODER | ENCODER | ENCODER | ENCODER |
| 3 | | | 0321930112E | 1.00 | SUPPORTO | SUPPORT | SUPPORT | STUETZE | SOPORTE |
| 4 | | | 0321930124A | 2.00 | DISTANZIALE | SPACER | ENTRETOISE | DISTANZSTUECK | DISTANCIADOR |
| 5 | | | 0000639207C | 1.00 | RIDUTTORE | GEAR UNIT | REDUCTEUR | GETRIEBE | REDUCTOR |
| 5 | | | 0000639207C | 1.00 | RIDUTTORE | GEAR UNIT | REDUCTEUR | GETRIEBE | REDUCTOR |
| 5 | | | 0000640979C | 1.00 | RIDUTTORE | GEAR UNIT | REDUCTEUR | GETRIEBE | REDUCTOR |
| 6 | | | 0001352115C | 1.00 | PRESSACAVO DIR. | CLAMPING SCREW (STRAIGHT) | SERRECABLE DROIT | KABELENDE (GERADE) | TOMA-CABLES DERECHO |
| 7 | | | 0001352064D | 1.00 | PRESSACAVO DIR. | CLAMPING SCREW (STRAIGHT) | SERRECABLE DROIT | KABELENDE (GERADE) | TOMA-CABLES DERECHO |
| 8 | | | 0322732003F | 1.00 | SUPPORTO | SUPPORT | SUPPORT | STUETZE | SOPORTE |
| 9 | | | 0001347519D | 1.00 | DADO X PRESSACAVO | NUT | ECROU | MUTTER | TUERCA X TOMACAB. |
| 10 | | | 0001347498H | 1.00 | DADO X PRESSACAVO | NUT | ECROU | MUTTER | TUERCA X TOMACAB. |
| 11 | | | 0000301853D | 1.00 | GHIERA | COLLAR | EMBOUT | NUTMUTTER | COLLAR |
| 12 | | | 0317521504D | 2.00 | ANELLO | RING | BAGUE | RING | ANILLO |
| 13 | | | 0000613045G | 4.00 | RALLA | WASHER | CRAPAUDINE | SCHEIBE | RANGUA |
| 14 | | | 0000613041H | 2.00 | GABBIA A RULLINI | ROLLER CAGE | CAGE A ROULEAUX | WALZENKAEFIG | COJINETE |
| 15 | | | 0321930129B | 1.00 | FLANGIA | FLANGE | FLASQUE | FLANSCH | BRIDA |
| 16 | | | 0000640018D | 1.00 | TAPPO | CAP | BOUCHON | STOPFEN | TAPON |
| 17 | | | 0000645059F | 1.00 | LINGUETTA | FEATHER KEY | LANGUETTE | FEDERKEIL | LINGUETA |
| 18 | | | 0322732004H | 1.00 | VITE | SCREW | VIS | SCHRAUBE | TORNILLO |
| 18 | | | 0322732004H | 1.00 | VITE | SCREW | VIS | SCHRAUBE | TORNILLO |
| 19 | | | 0001331046A | 1.00 | MOTORE TRIF. FRENO C.C. | 3-PH. MOTOR D.C. BRAKE | MOTEUR 3-PH . FREIN C.C | 3-PH. MOTOR G.S. BREMSE | MOT. TRIFAS. FR. C.C. |
| 20 | | | 0001308592L | 3.00 | FINECORSA | LIMIT SWITCH | FIN DE COURSE | ENDSCHALTER | FIN CARRERA |
| 20 | | | 0001308592L | 1.00 | FINECORSA | LIMIT SWITCH | FIN DE COURSE | ENDSCHALTER | FIN CARRERA |
| 21 | | | 0322732002D | 1.00 | SUPPORTO | SUPPORT | SUPPORT | STUETZE | SOPORTE |
| 22 | | | 0001307905D | 1.00 | FINECORSA | LIMIT SWITCH | FIN DE COURSE | ENDSCHALTER | FIN CARRERA |
| 23 | | | 0000301303G | 1.00 | DADO | NUT | ECROU | MUTTER | TUERCA |
| 24 | | | 0000305246A | 1.00 | ROSETTA | WASHER | RONDELLE | SCHEIBE | ARANDELA |
| 24 | | | 0000305246A | 2.00 | ROSETTA | WASHER | RONDELLE | SCHEIBE | ARANDELA |
| 25 | | | 0322732001B | 1.00 | STAFFA | BRACKET | BRIDE | BUEGEL | ABRAZADERA |
| 26 | | | 0000308354C | 1.00 | VITE | SCREW | VIS | SCHRAUBE | TORNILLO |
| 27 | | | 9622089002B | 1.00 | POSIZIONATORE | POSITIONER | POSITIONNEUR | STELLWERK | POSICIONADOR |
| 28 | | | 0322732014L | 1.00 | STAFFA | BRACKET | BRIDE | BUEGEL | ABRAZADERA |
| 29 | | | 0000305243D | 1.00 | ROSETTA | WASHER | RONDELLE | SCHEIBE | ARANDELA |
| 30 | | | 0000305338F | 2.00 | ROSETTA | WASHER | RONDELLE | SCHEIBE | ARANDELA |
| 31 | | | 0322371108C | 1.00 | SOFFIATORE | BLOWER | SOUFFLEUR | BLAESER | SOPLADOR |
| 32 | | | 0722732022E | 1.00 | VITE+CHIOC.RIC | SCREW+LEAD NUT | VIS+ECROU | SCHNECKE+MUTTER | TORN+TUER A DIBUJO |

| N | P | C | CODICE | Q.TY | DENOMINAZIONE | DESCRIPTION | DESIGNATION | BEZEICHNUNG | DENOMINACION |
|---|---|---|---|---|---|---|---|---|---|
| | 32 | | 0733530105A | 1.00 | VITE+CHIOC.RIC | SCREW+LEAD NUT | VIS+ECROU | SCHNECKE+MUTTER | TORN+TUER A DIBUJO |
| | 33 | | 0322710271G | 1.00 | SUPPORTO | SUPPORT | SUPPORT | STUETZE | SOPORTE |
| | 34 | | 0319433111G | 1.00 | GUIDA PORTACAMME | CAM HOLDER GUIDE | GUIDE PORTE-CAMES | NOCKENHALTER | GUIA PORTA EXC. |
| | 35 | | 0001347322E | 1.00 | CAMMA TCX-00-24 | CAM | CAME | NOCKEN | EXCENTRICO |
| | 36 | | 0322732019A | 1.00 | SUPPORTO | SUPPORT | SUPPORT | STUETZE | SOPORTE |
| | 37 | | 2722732212A | 1.00 | ASS. VALVOLE | VALVE UNIT | ENSEMBLE VALVES | VENTILE-EINHEIT | CONJ. VALVULAS |
| | 38 | | 0001500415H | 2.00 | VALVOLA | VALVE | SOUPAPE | VENTIL | VALVULA |
| | 39 | | 0001344098F | 1.00 | ELETTROVALVOLA V.110 | SOLENOID VALVE | ELECTROVALVE | MAGNETVENTIL | ELECTROVALVULA |
| | 40 | | 0001502498F | 2.00 | VALVOLA | VALVE | VALVE | VENTIL | VALV. |
| | 41 | | 0366535401E | 1.00 | INTERFACCIA | RING NUT | EMBOUT | STELLRING | CONEXION |
| | 42 | | 0766535414B | 1.00 | MOTORE | MOTOR | MOTEUR | MOTOR | MOTOR |

227-1309

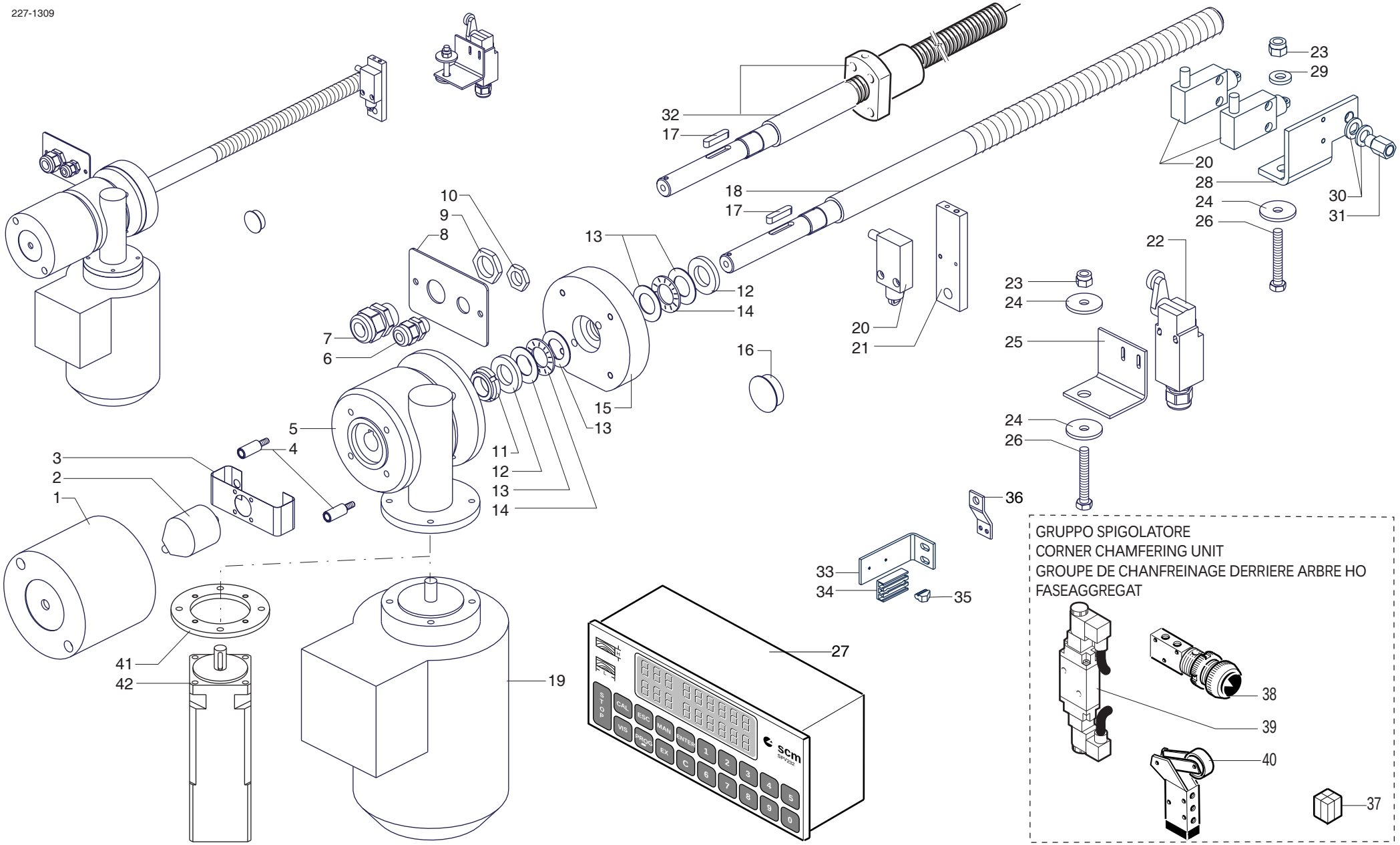


| | | | |
|---|---|---|---|
| scm | SUPERSET XL | POSIZIONAMENTO ORIZZONTALE ASSE CONTINUO - (01.01.1901 -> - p.20,06,2007)<br>CONTINUOUS AXIS HORIZONTAL ADJUSTING - REGLAGE HORIZONTAL AXE CONTINU<br>HORIZONTALVERSTELLUNG MIT KONT. ACHSE - UBICACION HORIZONTAL A EJE CONTINUO | 227-1309-0 |

| N | P | C | CODICE | Q.TY | DENOMINAZIONE | DESCRIPTION | DESIGNATION | BEZEICHNUNG | DENOMINACION |
|---|---|---|---|---|---|---|---|---|---|
| | 01.01.1901 -> 01.01.3000 | | | | Note: 2822732000C | | | | |
| 1 | | | 0319434402F | 1.00 | CARTER | COVER | CARTER | GEHAEUSE | CARTER |
| 2 | | | 0733521168C | 1.00 | ASS.ENCODER 100IMP/G | ASS.ENCODER 100IMP/G | ASS.ENCODER 100IMP/G | ASS.ENCODER 100IMP/G | ASS.ENCODER 100IMP/G |
| 2 | | | 0739736141H | 1.00 | ENCODER | ENCODER | ENCODER | ENCODER | ENCODER |
| 3 | | | 0321930112E | 1.00 | SUPPORTO | SUPPORT | SUPPORT | STUETZE | SOPORTE |
| 4 | | | 0321930124A | 2.00 | DISTANZIALE | SPACER | ENTRETOISE | DISTANZSTUECK | DISTANCIADOR |
| 5 | | | 0000639207C | 1.00 | RIDUTTORE | GEAR UNIT | REDUCTEUR | GETRIEBE | REDUCTOR |
| 5 | | | 0000639207C | 1.00 | RIDUTTORE | GEAR UNIT | REDUCTEUR | GETRIEBE | REDUCTOR |
| 5 | | | 0000640979C | 1.00 | RIDUTTORE | GEAR UNIT | REDUCTEUR | GETRIEBE | REDUCTOR |
| 6 | | | 0001352063B | 6.00 | PRESSACAVO | CABLE CLAMP | PRESSE-CABLE | KABELKLEMME | PRENSA CABLE |
| 6 | | | 0001352115C | 1.00 | PRESSACAVO DIR. | CLAMPING SCREW (STRAIGHT) | SERRECABLE DROIT | KABELENDE (GERADE) | TOMA-CABLES DERECHO |
| 7 | | | 0001352064D | 1.00 | PRESSACAVO DIR. | CLAMPING SCREW (STRAIGHT) | SERRECABLE DROIT | KABELENDE (GERADE) | TOMA-CABLES DERECHO |
| 8 | | | 0322732003F | 1.00 | SUPPORTO | SUPPORT | SUPPORT | STUETZE | SOPORTE |
| 8 | | | 0522732065B | 1.00 | SCATOLA DERIVAZIONE | BOX | BOITE | KASTEN | CAJA DERIVACION |
| 9 | | | 0001347189C | 2.00 | DADO | NUT | ECROU | MUTTER | TUERCA |
| 9 | | | 0001347519D | 1.00 | DADO X PRESSACAVO | NUT | ECROU | MUTTER | TUERCA X TOMACAB. |
| 10 | | | 0001347498H | 1.00 | DADO X PRESSACAVO | NUT | ECROU | MUTTER | TUERCA X TOMACAB. |
| 11 | | | 0000301853D | 1.00 | GHIERA | COLLAR | EMBOUT | NUTMUTTER | COLLAR |
| 12 | | | 0317521504D | 2.00 | ANELLO | RING | BAGUE | RING | ANILLO |
| 13 | | | 0000613045G | 4.00 | RALLA | WASHER | CRAPAUDINE | SCHEIBE | RANGUA |
| 14 | | | 0000613041H | 2.00 | GABBIA A RULLINI | ROLLER CAGE | CAGE A ROULEAUX | WALZENKAEFIG | COJINETE |
| 15 | | | 0321930129B | 1.00 | FLANGIA | FLANGE | FLASQUE | FLANSCH | BRIDA |
| 16 | | | 0000640018D | 1.00 | TAPPO | CAP | BOUCHON | STOPFEN | TAPON |
| 17 | | | 0000645059F | 1.00 | LINGUETTA | FEATHER KEY | LANGUETTE | FEDERKEIL | LINGUETA |
| 18 | | | 0322732004H | 1.00 | VITE | SCREW | VIS | SCHRAUBE | TORNILLO |
| 18 | | | 0322732004H | 1.00 | VITE | SCREW | VIS | SCHRAUBE | TORNILLO |
| 19 | | | 0001331046A | 1.00 | MOTORE TRIF. FRENO C.C. | 3-PH. MOTOR D.C. BRAKE | MOTEUR 3-PH . FREIN C.C | 3-PH. MOTOR G.S. BREMSE | MOT. TRIFAS. FR. C.C. |
| 20 | | | 0001308592L | 1.00 | FINECORSA | LIMIT SWITCH | FIN DE COURSE | ENDSCHALTER | FIN CARRERA |
| 20 | | | 0001308592L | 3.00 | FINECORSA | LIMIT SWITCH | FIN DE COURSE | ENDSCHALTER | FIN CARRERA |
| 21 | | | 0322732002D | 1.00 | SUPPORTO | SUPPORT | SUPPORT | STUETZE | SOPORTE |
| 22 | | | 0001307905D | 1.00 | FINECORSA | LIMIT SWITCH | FIN DE COURSE | ENDSCHALTER | FIN CARRERA |
| 23 | | | 0000301303G | 1.00 | DADO | NUT | ECROU | MUTTER | TUERCA |
| 24 | | | 0000305246A | 1.00 | ROSETTA | WASHER | RONDELLE | SCHEIBE | ARANDELA |
| 24 | | | 0000305246A | 2.00 | ROSETTA | WASHER | RONDELLE | SCHEIBE | ARANDELA |
| 25 | | | 0322732001B | 1.00 | STAFFA | BRACKET | BRIDE | BUEGEL | ABRAZADERA |
| 26 | | | 0000308354C | 1.00 | VITE | SCREW | VIS | SCHRAUBE | TORNILLO |
| 27 | | | 9622089002B | 1.00 | POSIZIONATORE | POSITIONER | POSITIONNEUR | STELLWERK | POSICIONADOR |
| 28 | | | 0322732014L | 1.00 | STAFFA | BRACKET | BRIDE | BUEGEL | ABRAZADERA |
| 29 | | | 0000305243D | 1.00 | ROSETTA | WASHER | RONDELLE | SCHEIBE | ARANDELA |
| 30 | | | 0000305338F | 2.00 | ROSETTA | WASHER | RONDELLE | SCHEIBE | ARANDELA |

| N | P | C | CODICE | Q.TY | DENOMINAZIONE | DESCRIPTION | DESIGNATION | BEZEICHNUNG | DENOMINACION |
|---|---|---|---|---|---|---|---|---|---|
| | 31 | | 0322371108C | 1.00 | SOFFIATORE | BLOWER | SOUFFLEUR | BLAESER | SOPLADOR |
| | 32 | | 0722732022E | 1.00 | VITE+CHIOC.RIC | SCREW+LEAD NUT | VIS+ECROU | SCHNECKE+MUTTER | TORN+TUER A DIBUJO |
| | 32 | | 0733530105A | 1.00 | VITE+CHIOC.RIC | SCREW+LEAD NUT | VIS+ECROU | SCHNECKE+MUTTER | TORN+TUER A DIBUJO |
| | 33 | | 0366535401E | 1.00 | INTERFACCIA | RING NUT | EMBOUT | STELLRING | CONEXION |
| | 34 | | 0766535414B | 1.00 | MOTORE | MOTOR | MOTEUR | MOTOR | MOTOR |

227-1309

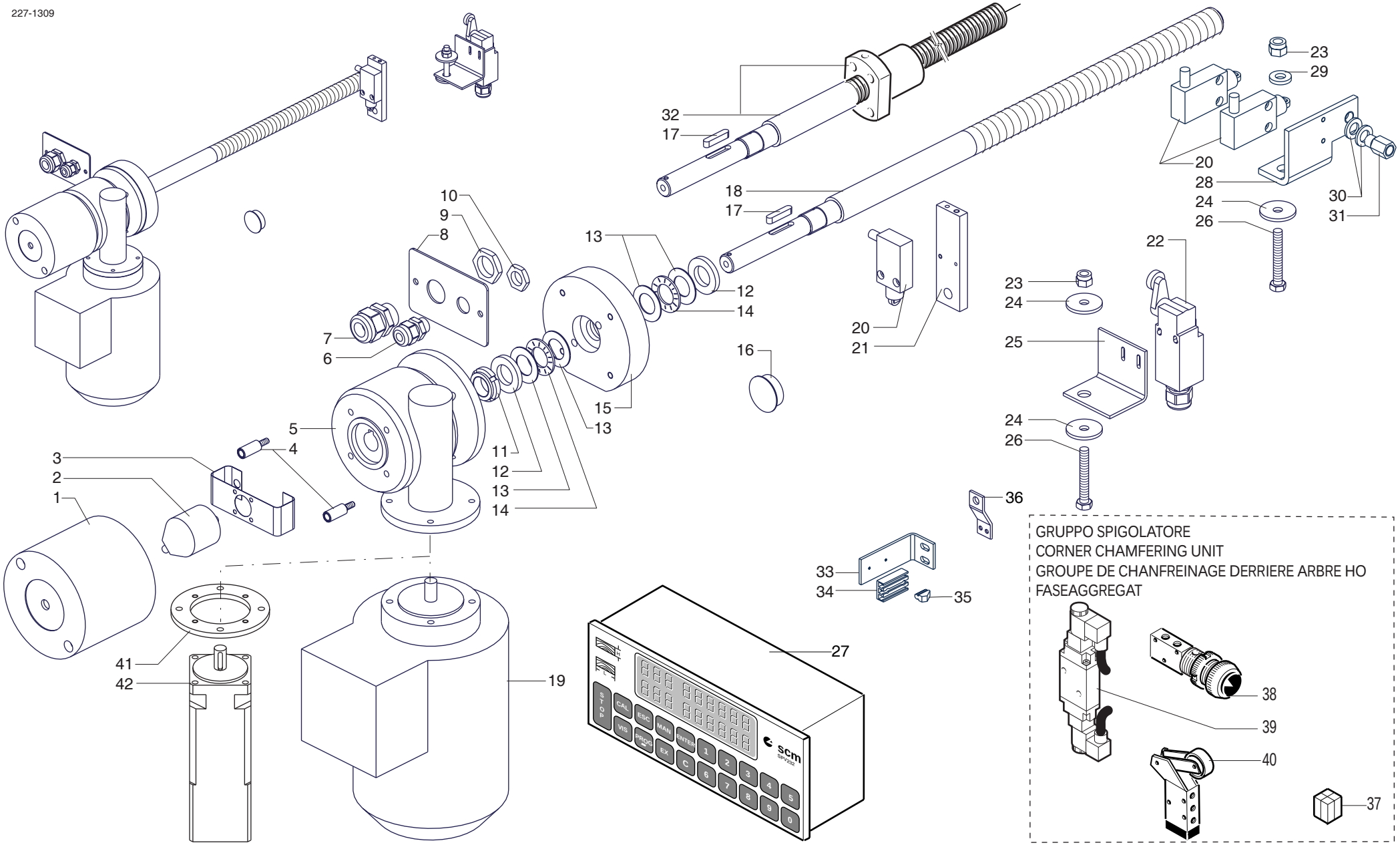


| | | | |
|---|---|---|---|
| scm | SUPERSET XL | POSIZIONAMENTO ORIZZONTALE 4 ASSI - (01.01.1901 -> 20.09.2000 - p.20,06,2007)<br>HORIZONTAL POSITIONING 4-AXES - POSITIONNEMENT HORIZONTAL 4 AXES<br>HORIZONTALE POSITIONERUNG 4 ACHSEN - UBICACION HORIZONTAL A 4 EJES | 227-1309-1 |

22713091

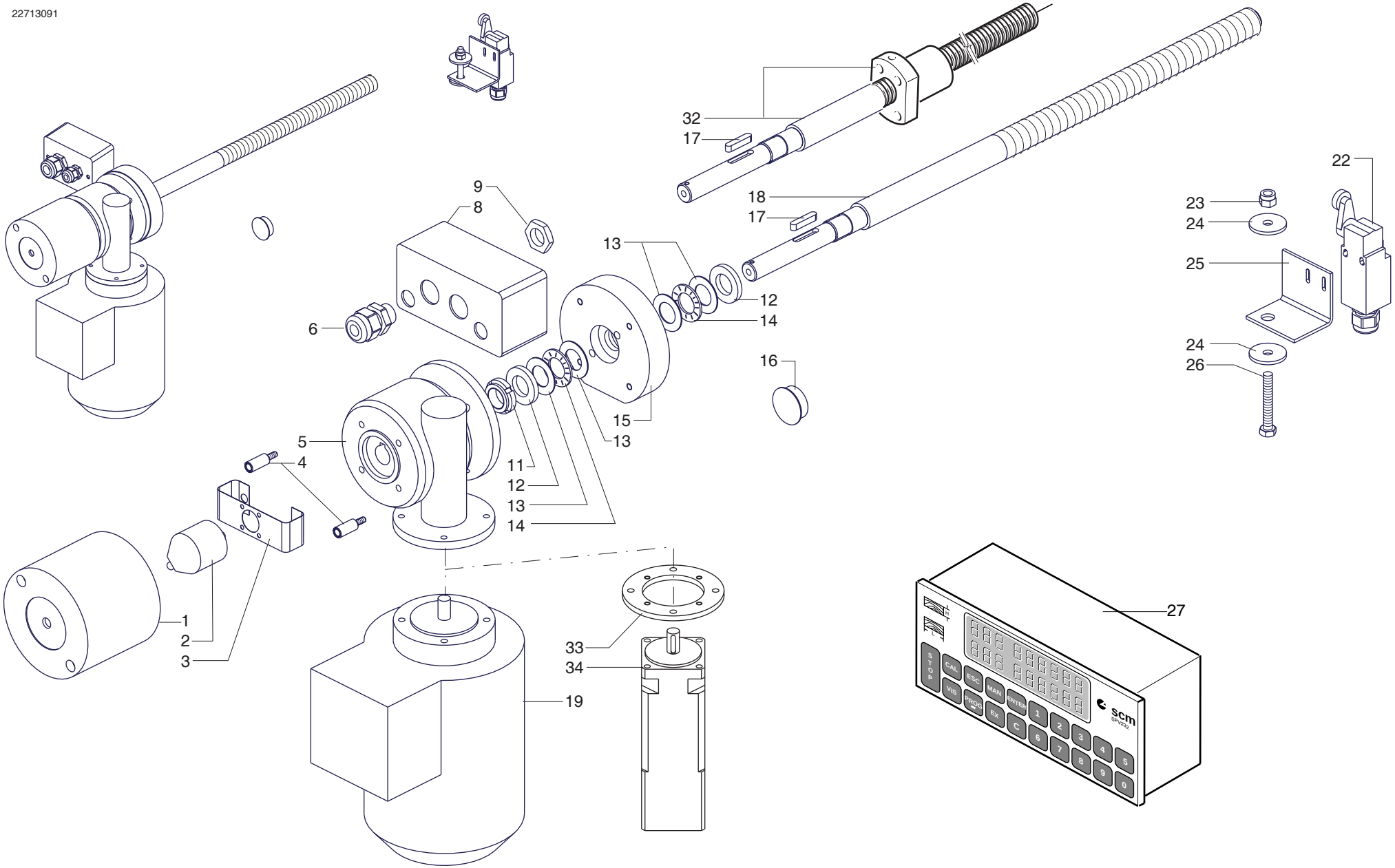


| | | | |
|---|---|---|---|
| scm | SUPERSET XL | POSIZIONAMENTO ORIZZONTALE 4 ASSI - (21.09.2000 -> - p.20,06,2007)<br>HORIZONTAL POSITIONING 4-AXES - POSITIONNEMENT HORIZONTAL 4 AXES<br>HORIZONTALE POSITIONERUNG 4 ACHSEN - UBICACION HORIZONTAL A 4 EJES | 227-1309-1 |

| scm | SUPERSET XL | BLOCCAGGIO VERTICALE - (p.20,06,2007)<br>VERTICAL UNIT LOCKING - SERRAGE VERTICAL GROUPE<br>VERT. BLOCKIERUNG DES AGGREGATES - BLOQUEO VERTICAL | 227-1310-0 |
|---|---|---|---|

| N | P | C | CODICE | Q.TY | DENOMINAZIONE | DESCRIPTION | DESIGNATION | BEZEICHNUNG | DENOMINACION |
|---|---|---|---|---|---|---|---|---|---|
| | 01.01.1901 -> 01.01.3000 | | | | Note: 2822730081B | | | | |
| | 1 | | 0719412601A | 1.00 | MANIGLIA | HANDLE | POIGNEE | HANDGRIFF | MANIJA |
| | 2 | | 1416330018C | 1.00 | FLANGIA | FLANGE | FLASQUE | FLANSCH | ANILLO |
| | 3 | | 0000644268H | 2.00 | ANELLO SEEGER | CIRCLIP | CIRCLIP | SEEGERRING | SEEGER |
| | 4 | | 0000613045G | 2.00 | RALLA | WASHER | CRAPAUDINE | SCHEIBE | RANGUA |
| | 5 | | 0322730171L | 1.00 | BOCCOLA | BUSHING | DOUILLE | BUCHSE | CASQUILLO |
| | 6 | | 0522730153F | 1.00 | ASTA | ROD | TIGE | STANGE | ASTA |
| | 7 | | 0511131118D | 1.00 | ASTA | ROD | TIGE | STANGE | ASTA |
| | 7 | | 0522732023C | 1.00 | ASTA | ROD | TIGE | STANGE | ASTA |

227-1310

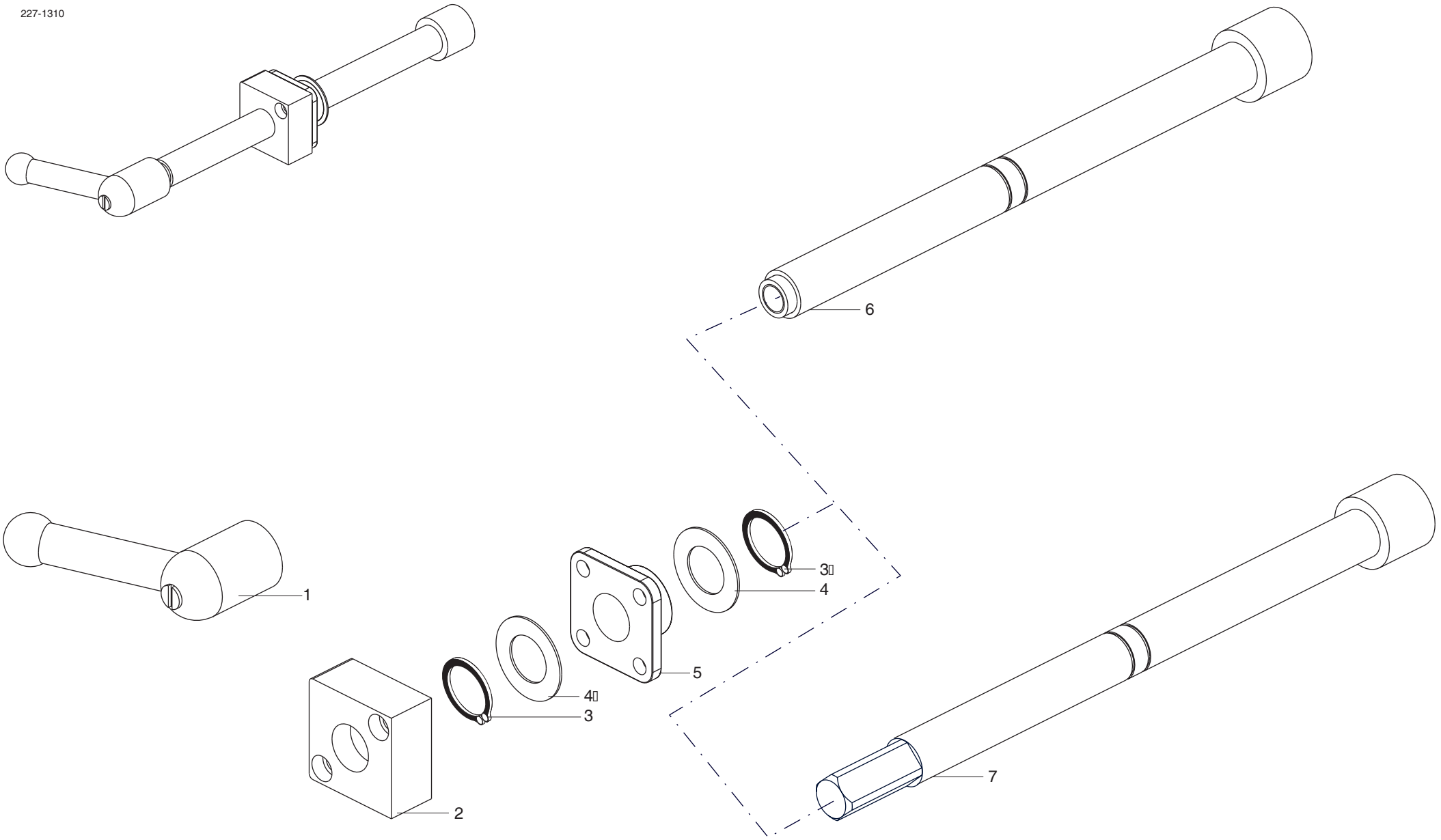


| | | | |
|---|---|---|---|
| scm | SUPERSET XL | BLOCCAGGIO VERTICALE - (01.01.1901 -> - p.20,06,2007)<br>VERTICAL UNIT LOCKING - SERRAGE VERTICAL GROUPE<br>VERT. BLOCKIERUNG DES AGGREGATES - BLOQUEO VERTICAL | 227-1310-0 |

| N | P | C | CODICE | Q.TY | DENOMINAZIONE | DESCRIPTION | DESIGNATION | BEZEICHNUNG | DENOMINACION |
|---|---|---|---|---|---|---|---|---|---|
| | 01.01.1901 -> 01.01.3000 | | | | Note: 2822730091C | | | | |
| | 1 | | 0719412602C | 1.00 | MANIGLIA | HANDLE | POIGNEE | HANDGRIFF | MANIJA |
| | 2 | | 1416330018C | 1.00 | FLANGIA | FLANGE | FLASQUE | FLANSCH | ANILLO |
| | 3 | | 0000613045G | 2.00 | RALLA | WASHER | CRAPAUDINE | SCHEIBE | RANGUA |
| | 4 | | 0000644268H | 2.00 | ANELLO SEEGER | CIRCLIP | CIRCLIP | SEEGERRING | SEEGER |
| | 5 | | 0322730171L | 1.00 | BOCCOLA | BUSHING | DOUILLE | BUCHSE | CASQUILLO |
| | 6 | | 0322730115B | 1.00 | ASTA | ROD | TIGE | STANGE | ASTA |
| | 7 | | 0322730186B | 1.00 | PERNO | PIN | PIVOT | BOLZEN | PERNO |
| | 8 | | 0000304245G | 1.00 | VITE | SCREW | VIS | SCHRAUBE | TORNILLO |
| | 9 | | 0311131117G | 1.00 | ASTA | ROD | TIGE | STANGE | ASTA |
| | 9 | | 0311136703F | 1.00 | ASTA | ROD | TIGE | STANGE | ASTA |

227-1311

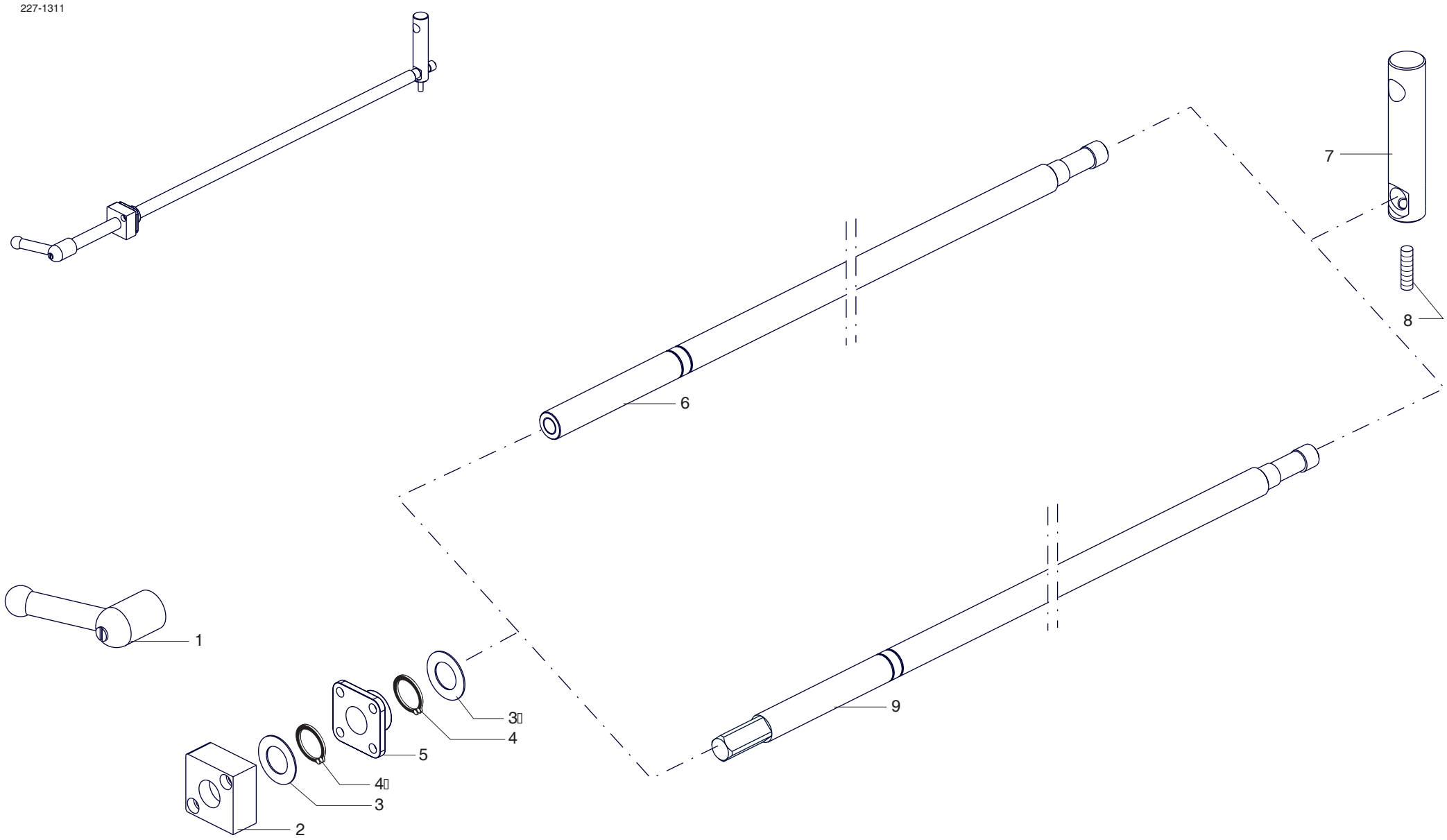


| scm | SUPERSET XL | BLOCCAGGIO ORIZZONTALE - (01.01.1901 -> - p.20,06,2007)<br>HORIZONTAL UNIT LOCKING - SERRAGE HORIZONTAL GROUPE<br>HORIZ. BLOCKIERUNG DES AGGREGATES - BLOQUEO HORIZONTAL | 227-1311-0 |
|---|---|---|---|

| N | P | C | CODICE | Q.TY | DENOMINAZIONE | DESCRIPTION | DESIGNATION | BEZEICHNUNG | DENOMINACION |
|---|---|---|---|---|---|---|---|---|---|
| | 01.01.1901 -> 01.01.3000 | | | | Note: 2822730130F | | | | |
| | 1 | | 0322730164E | 2.00 | POMELLO | BALL GRIP | POIGNEE | KUGELGRIFF | POMO |
| | 2 | | 0000644264L | 2.00 | ANELLO SEEGER | CIRCLIP | CIRCLIP | SEEGERRING | SEEGER |
| | 3 | | 0522730184B | 1.00 | COPERCHIO | COVER | COUVERCLE | DECKEL | TAPA |
| | 4 | | 0522732018C | 1.00 | COPERCHIO | COVER | COUVERCLE | DECKEL | TAPA |
| | 4 | | 1422730131H | 1.00 | COPERCHIO | COVER | COUVERCLE | DECKEL | TAPA |
| | 5 | | 0000303309C | 2.00 | VITE | SCREW | VIS | SCHRAUBE | TORNILLO |
| | 5 | | 0000303339F | 2.00 | VITE | SCREW | VIS | SCHRAUBE | TORNILLO |
| | 5 | | 0000304320F | 2.00 | VITE | SCREW | VIS | SCHRAUBE | TORNILLO |
| | 6 | | 0322730121D | 1.00 | GUIDA | *TRAD MANCANTE* | *TRAD MANCANTE* | *TRAD MANCANTE* | *TRAD MANCANTE* |
| | 6 | | 0322730142H | 1.00 | GUIDA | GUIDE | GUIDE | FUEHRUNG | GUIA |
| | 7 | | 0322730185L | 1.00 | PROTEZIONE | GUARD | PROTECTION | ABDECKUNG | PROTECCION |
| | 8 | | 0321960416G | 1.00 | MOLLA | SPRING | RESSORT | FEDER | RESORTE |
| | 9 | | 0322730163C | 1.00 | PERNO | PIN | PIVOT | BOLZEN | PERNO |
| | 10 | | 0322730190L | 2.00 | ECCENTRICO | ECCENTRIC | EXCENTRIQUE | NOCKEN | EXCENTRICO |
| | 11 | | 0000304329F | 2.00 | VITE | SCREW | VIS | SCHRAUBE | TORNILLO |
| | 12 | | 0000301363D | 2.00 | DADO | NUT | ECROU | MUTTER | TUERCA |
| | 13 | | 0000613129F | 2.00 | BOCCOLA AUTOL. | SELF-LUBRICATING BUSH | DOUILLE AUTOLUBRIFIANTE | SELBSTSCHMIER. BUCHSE | ANILL.AUTOLUB. |
| | 14 | | 0322730613H | 1.00 | PERNO | PIN | PIVOT | BOLZEN | PERNO |
| | 15 | | 0322730125C | 1.00 | CONVOGLIATORE | CONVEYOR | CONVOYEUR | FOERDERER | TRANSPORTADOR |
| | 15 | | 0322730195A | 1.00 | CONVOGLIATORE | CONVEYOR | CONVOYEUR | FOERDERER | TRANSPORTADOR |
| | 15 | | 0322732016D | 1.00 | CONVOGLIATORE | CONVEYOR | CONVOYEUR | FOERDERER | TRANSPORTADOR |
| | 15 | | 0322732017F | 1.00 | CONVOGLIATORE | CONVEYOR | CONVOYEUR | FOERDERER | TRANSPORTADOR |
| | 16 | | 0322730123H | 1.00 | SUPPORTO | SUPPORT | SUPPORT | STUETZE | SOPORTE |
| | 17 | | 0322730610B | 1.00 | SCARPA PRESSATRICE | SHOE | SABOT | DRUCKSCHUH | PLANCHA PRENSORA |
| | 17 | | 0322730654E | 1.00 | SCARPA PRESSATRICE | SHOE | SABOT | DRUCKSCHUH | PLANCHA PRENSORA |
| | 17 | | 0322730906A | 1.00 | SCARPA PRESSATRICE | SHOE | SABOT | DRUCKSCHUH | PLANCHA PRENSORA |
| | 18 | | 0322730192D | 1.00 | CONVOGLIATORE | CONVEYOR | CONVOYEUR | FOERDERER | TRANSPORTADOR |
| | 19 | | 0000308202A | 4.00 | VITE | SCREW | VIS | SCHRAUBE | TORNILLO |
| | 20 | | 0522730193A | 1.00 | CONVOGLIATORE | CONVEYOR | CONVOYEUR | FOERDERER | TRANSPORTADOR |
| | 21 | | 0321910791A | 1.00 | TARGA | PLATE | PLAQUE | SCHILD | TARJETA |
| | 21 | | 0321910819B | 1.00 | TARGA 7000 | RATING PLATE | PLAQUE | SCHILD | TARJETA |
| | 22 | | 0321910792C | 1.00 | TARGA | PLATE | PLAQUE | SCHILD | TARJETA |
| | 23 | | 0302110049H | 1.00 | TARGA | PLATE | PLAQUE | SCHILD | TARJETA |
| | 24 | | 0302110069A | 1.00 | TARGA | PLATE | PLAQUE | SCHILD | TARJETA |

227-1312

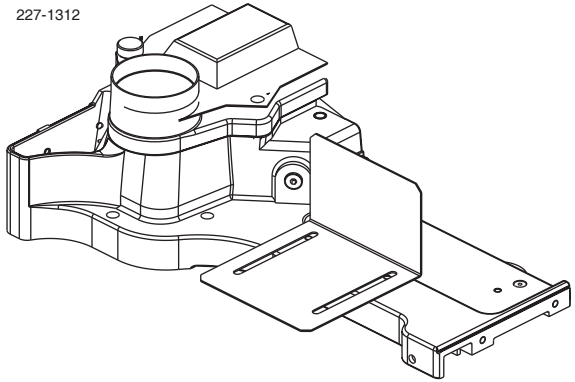



23

**⚠ WARNING**



**ROTATING CUTTER HEAD.**
**Do NOT operate without guard:**
**lockout / tagout before servicing:**

24

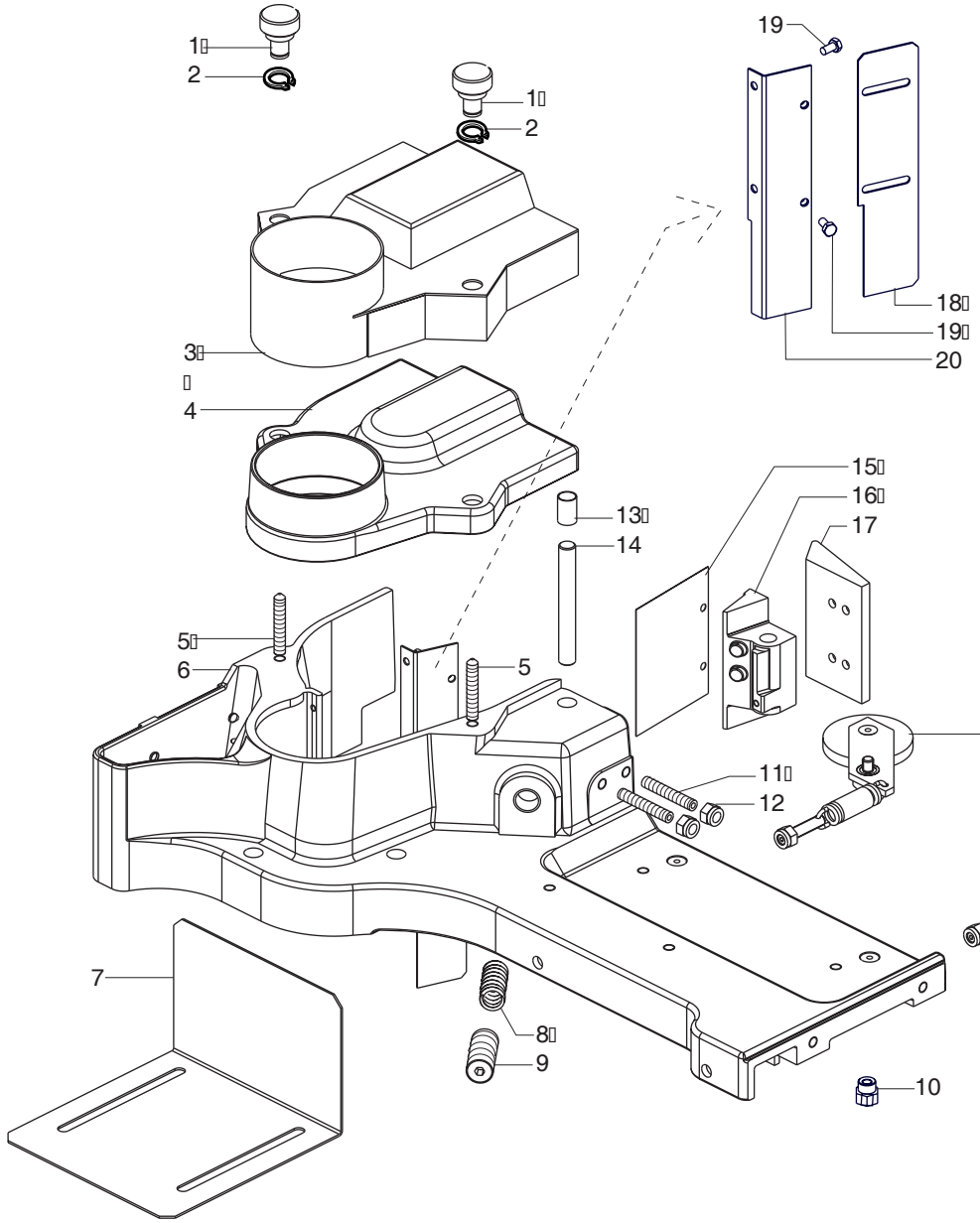


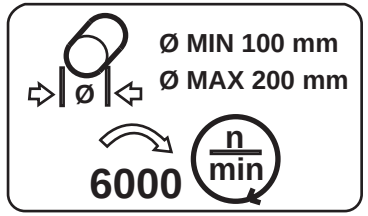


21

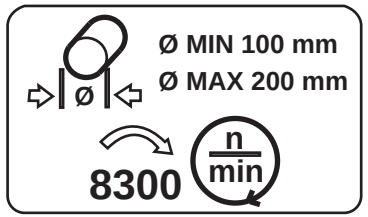


22

| | | | |
|---|---|---|---|
| scm | **SUPERSET XL** | **CUFFIA D'ASPIRAZIONE (V.S.) - (01.01.1901 -> - p.20,06,2007)**<br>**SUCTION HOOD - HOTTE D'ASPIRATION**<br>**ABSAUGHAUBE - CAMPANA DE ASPIRACION (V.I.)** | **227-1312-0** |

| scm | SUPERSET XL | RUOTA DI PRESSIONE LATERALE - (p.20,06,2007)<br>LATERAL PRESSURE WHEEL - ROUE PRESSION LATERALE<br>SEITENDRUKRAD - RUEDA DE PRESION LATERAL | 227-1313-0 |
|---|---|---|---|

| N | P | C | CODICE | Q.TY | DENOMINAZIONE | DESCRIPTION | DESIGNATION | BEZEICHNUNG | DENOMINACION |
|---|---|---|---|---|---|---|---|---|---|
| | 01.01.1901 -> 01.01.3000 | | | | Note: 2822730122L | | | | |
| 1 | | | 0000301363D | 1.00 | DADO | NUT | ECROU | MUTTER | TUERCA |
| 2 | | | 0319461231F | 1.00 | REGISTRO | REGULATOR | REGULATEUR | REGLER | REGULADOR |
| 3 | | | 0319461230D | 1.00 | MOLLA | SPRING | RESSORT | FEDER | RESORTE |
| 3 | | | 0790568055L | 2.00 | MOLLA | SPRING | RESSORT | FEDER | RESORTE |
| 4 | | | 0319461226F | 1.00 | BIELLA | CONNECTING ROD | BIELLE | PLEUELSTANGE | BIELA |
| 5 | | | 0000310252L | 1.00 | VITE | SCREW | VIS | SCHRAUBE | TORNILLO |
| 6 | | | 0319461227H | 1.00 | BRONZINA | BRASS | COUSSINET | BRONZEBUCHSE | BUJE |
| 7 | | | 0319461225D | 1.00 | PERNO | PIN | PIVOT | STIFT | PERNO |
| 8 | | | 0000606040G | 1.00 | CUSCINETTO | BEARING | ROULEMENT | LAGER | COJINETE |
| 9 | | | 0319461228A | 1.00 | RUOTA | WHEEL | ROUE | RAD | RUEDA |
| 10 | | | 0319461229C | 1.00 | PERNO | PIN | PIVOT | STIFT | PERNO |

227-1313

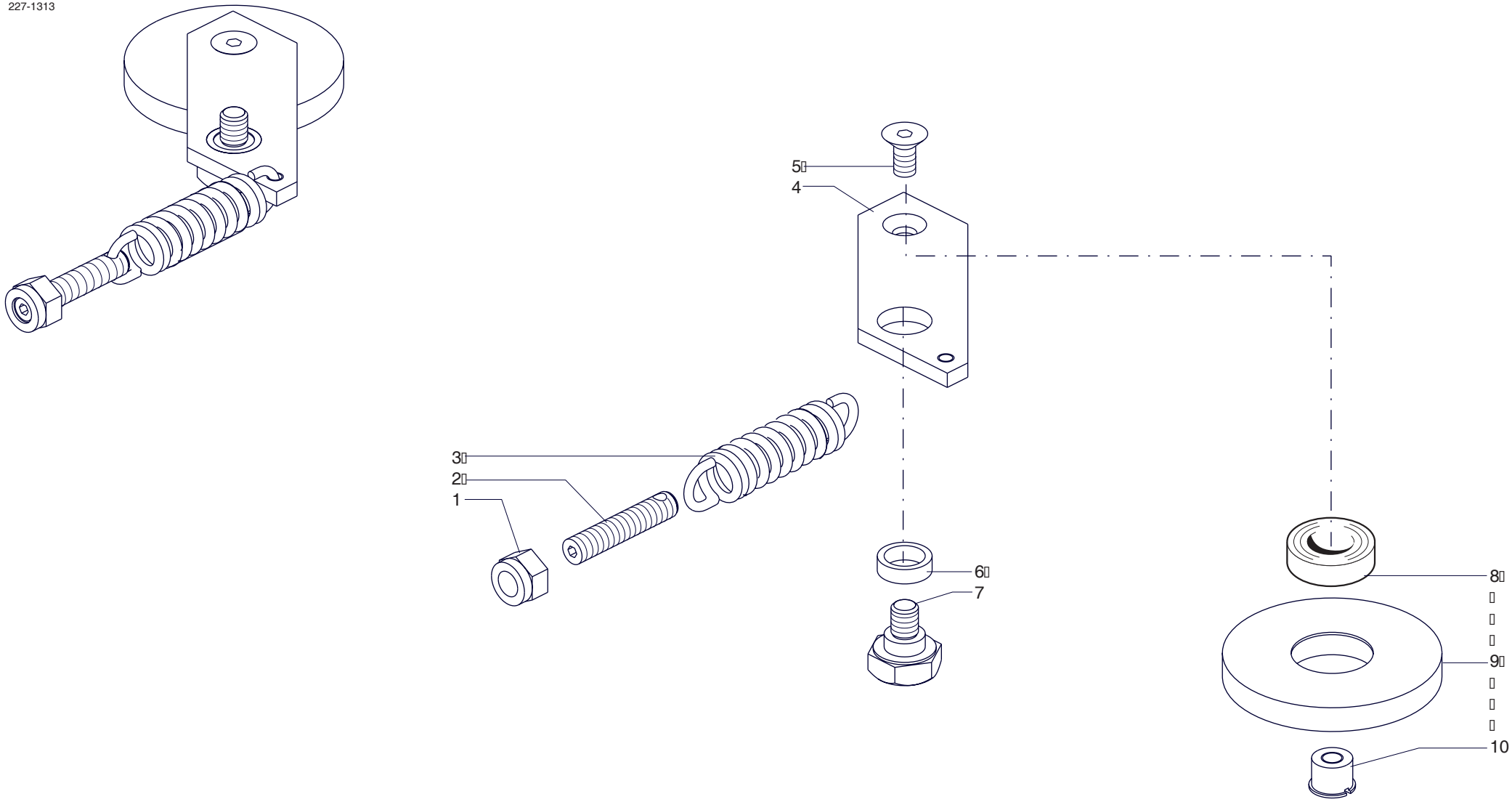


| | | | |
|---|---|---|---|
| scm | SUPERSET XL | RUOTA DI PRESSIONE LATERALE - (01.01.1901 -> - p.20,06,2007)<br>LATERAL PRESSURE WHEEL - ROUE PRESSION LATERALE<br>SEITENDRUKRAD - RUEDA DE PRESION LATERAL | 227-1313-0 |

| scm | SUPERSET XL | PRESSATORE ORIZZONTALE ESCLUSIONE PNEUM. - (p.20,06,2007)<br>HORIZ. PRESSER (PNEUM SWITCHING OFF) - PRESSEUR HORIZ. EXCLUSION PNEUM.<br>HOR. DRUCKELEMENT (PNEUM. AUSSCHALTEN) - PRENSOR HORIZONTAL EXCLUSION PNEUM. | 227-1314-0 |
|---|---|---|---|

| N | P | C | CODICE | Q.TY | DENOMINAZIONE | DESCRIPTION | DESIGNATION | BEZEICHNUNG | DENOMINACION |
|---|---|---|---|---|---|---|---|---|---|
| | 01.01.1901 -> 01.01.3000 | | | | Note: 2822730124D | | | | |
| | 1 | | 0000301309A | 1.00 | DADO | NUT | ECROU | MUTTER | TUERCA |
| | 2 | | 0000304246L | 1.00 | VITE | SCREW | VIS | SCHRAUBE | TORNILLO |
| | 3 | | 0001502124C | 1.00 | CILINDRO PNEUMATICO | PNEUMATIC CYLINDER | CYLINDRE PNEUMATIQUE | PNEUMATIKZYLINDER | CILINDRO NEUMATICO |
| | 4 | | 0322730133L | 1.00 | PROLUNGA | EXTENSION | RALLONGE | VERLAENGERUNG | EXTENSION |
| | 4 | | 0322730900G | 1.00 | PROLUNGA PEZZI BASSI | EXTENSION | RALLONGE | VERLAENGERUNG | EXTENSION |
| | 5 | | 0322730181A | 1.00 | CHIUSURA | COVER | PIECE DE FERMETURE | DECKEL | CIERRE |
| | 6 | | 0000310243A | 1.00 | VITE | SCREW | VIS | SCHRAUBE | TORNILLO |
| | 7 | | 0322730190L | 1.00 | ECCENTRICO | ECCENTRIC | EXCENTRIQUE | NOCKEN | EXCENTRICO |
| | 8 | | 0000310252L | 2.00 | VITE | SCREW | VIS | SCHRAUBE | TORNILLO |
| | 9 | | 0321960131B | 1.00 | SEMIFORCELLA | HALF-FORK | DEMI-FOURCHE | HALBGABEL | SEMI-HORQUILLA |
| | 10 | | 0321960129H | 1.00 | BIELLA | CONNECTING ROD | BIELLE | PLEUELSTANGE | BIELA |
| | 11 | | 0319461230D | 1.00 | MOLLA | SPRING | RESSORT | FEDER | RESORTE |
| | 11 | | 0790568055L | 1.00 | MOLLA | SPRING | RESSORT | FEDER | RESORTE |
| | 12 | | 0319461231F | 1.00 | REGISTRO | REGULATOR | REGULATEUR | REGLER | REGULADOR |
| | 13 | | 0000301363D | 1.00 | DADO | NUT | ECROU | MUTTER | TUERCA |
| | 14 | | 0319461227H | 1.00 | BRONZINA | BRASS | COUSSINET | BRONZEBUCHSE | BUJE |
| | 15 | | 0319461225D | 1.00 | PERNO | PIN | PIVOT | STIFT | PERNO |
| | 16 | | 0319461228A | 1.00 | RUOTA | WHEEL | ROUE | RAD | RUEDA |
| | 17 | | 0000606040G | 1.00 | CUSCINETTO | BEARING | ROULEMENT | LAGER | COJINETE |
| | 18 | | 0319461229C | 1.00 | PERNO | PIN | PIVOT | STIFT | PERNO |
| | 19 | | 0322760190F | 1.00 | LIMITATORE | LIMITER | LIMITEUR | BEGRENZER | LIMITADOR |

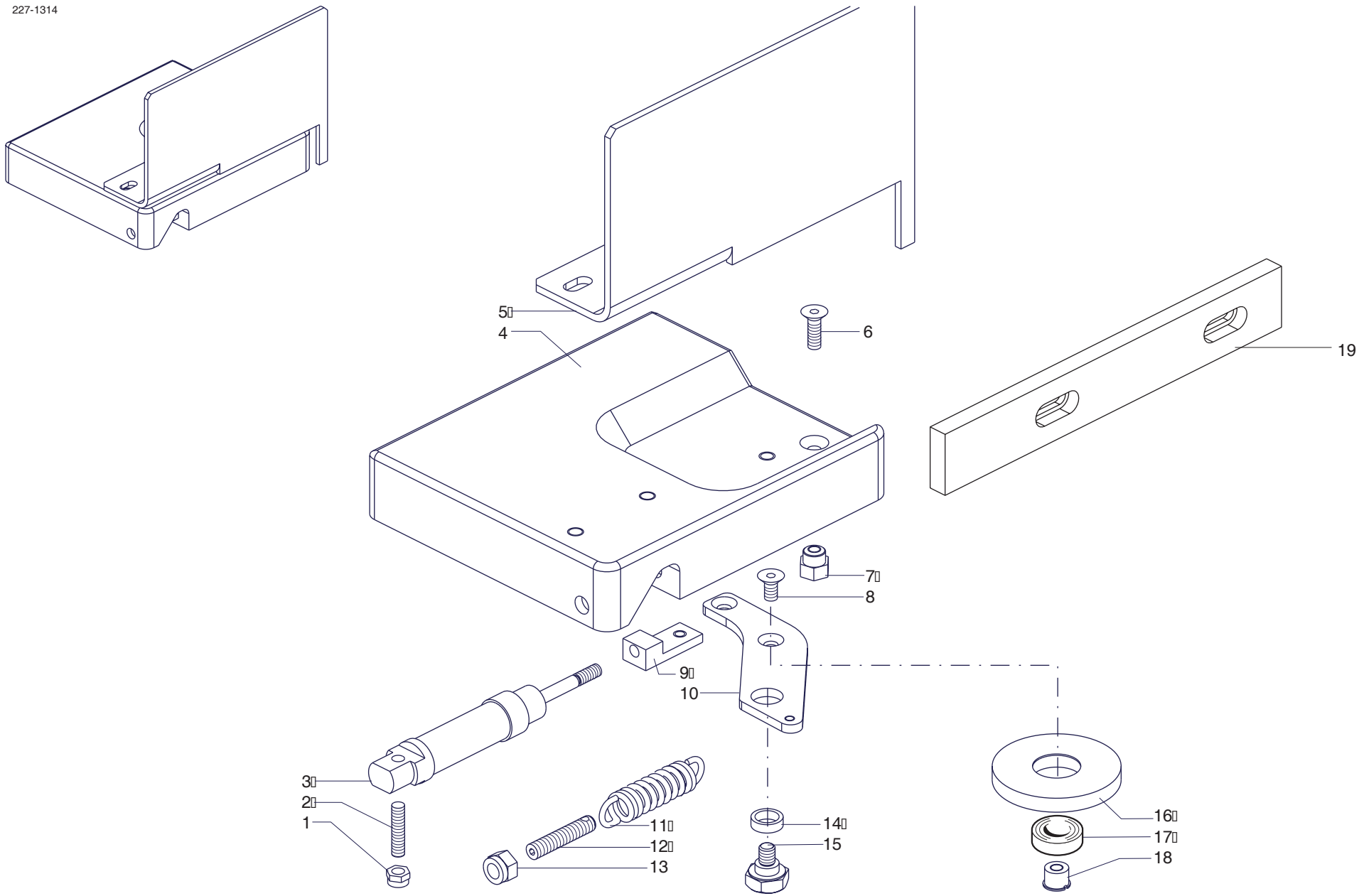


| | | | |
|---|---|---|---|
| scm | SUPERSET XL | PRESSATORE ORIZZONTALE ESCLUSIONE PNEUM. - (01.01.1901 -> - p.20,06,2007)<br>HORIZ. PRESSER (PNEUM SWITCHING OFF) - PRESSEUR HORIZ. EXCLUSION PNEUM.<br>HOR. DRUCKELEMENT (PNEUM. AUSSCHALTEN) - PRENSOR HORIZONTAL EXCLUSION PNEUM. | 227-1314-0 |

| scm | SUPERSET XL | PIASTRA E CHIUSURA BANDELLA - (p.20,06,2007)<br>COVER UNIT - GROUPE COUVERCLE<br>ABDECKUNG - PLANCHA Y CERRADO LAMINA | 227-1315-0 |
|---|---|---|---|

| N | P | C | CODICE | Q.TY | DENOMINAZIONE | DESCRIPTION | DESIGNATION | BEZEICHNUNG | DENOMINACION |
|---|---|---|---|---|---|---|---|---|---|
| | 01.01.1901 -> 01.01.3000 | | | | Note: 2822730220G | | | | |
| | 1 | | 0000307319H | 2.00 | SPINA | PIN | GOUPILLE | STIFT | REMACHE |
| | 2 | | 0322730194H | 1.00 | PIASTRA | PLATE | PLAQUE | PLATTE | PLANCHA |
| | 3 | | 0522730191F | 1.00 | CHIUSURA | COVER | PIECE DE FERMETURE | DECKEL | CIERRE |
| | 4 | | 0322730168D | 1.00 | CHIUSURA | COVER | PIECE DE FERMETURE | DECKEL | CIERRE |

227-1315

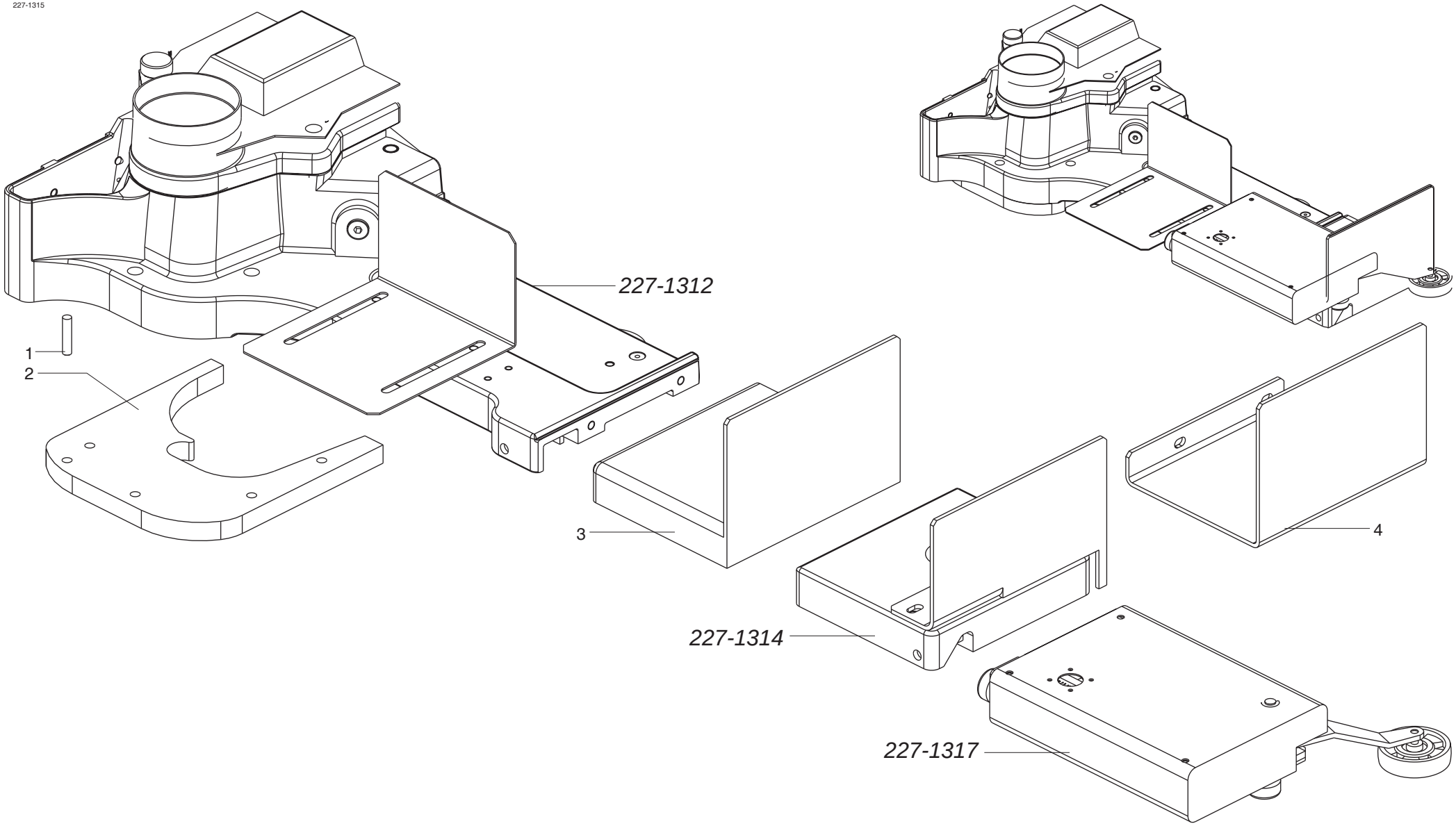


| | | | |
|---|---|---|---|
| scm | SUPERSET XL | PIASTRA E CHIUSURA BANDELLA - (01.01.1901 -> - p.20,06,2007)<br>COVER UNIT - GROUPE COUVERCLE<br>ABDECKUNG - PLANCHA Y CERRADO LAMINA | 227-1315-0 |

| scm | SUPERSET XL | GUIDA SINISTRA IN USCITA - (p.20,06,2007)<br>LEFT FENCE (EXIT SIDE) - GUIDE GAUCHE EN SORTIE<br>LINKER AUSGABEANSCHLAG - GUIA IZQUIERDA EN SALIDA | 227-1316-0 |
|---|---|---|---|

| N | P | C | CODICE | Q.TY | DENOMINAZIONE | DESCRIPTION | DESIGNATION | BEZEICHNUNG | DENOMINACION |
|---|---|---|---|---|---|---|---|---|---|
| | 01.01.1901 -> 01.01.3000 | | | | Note: 2822730132A | | | | |
| 1 | | | 0521960312A | 1.00 | STAFFA | BRACKET | BRIDE | BUEGEL | ABRAZADERA |
| 1 | | | 0522732210L | 1.00 | STAFFA | BRACKET | BRIDE | BUEGEL | ABRAZADERA |
| 1 | | | 0522732227F | 1.00 | STAFFA | BRACKET | BRIDE | BUEGEL | ABRAZADERA |
| 2 | | | 0321960313H | 2.00 | BLOCCHETTO | BLOCK | BLOC | BLOCK | BLOQUE |
| 3 | | | 0300924702E | 2.00 | MOLLA | SPRING | RESSORT | FEDER | RESORTE |
| 4 | | | 0000307316B | 2.00 | SPINA | PIN | CHEVILLE | STIFT | CLAVIJA |
| 5 | | | 0322730119A | 1.00 | LAMIERA | PLATE | TOLE | BLECH | CHAPA |
| 6 | | | 0321042000B | 4.00 | TESTATA | HEAD | TETE | KOPF | CABEZAL |
| 7 | | | 0321960314A | 1.00 | LARDONE | GIB | CONTRE-FER | STELLEISTE | CHAVETA |
| 7 | | | 0322732218C | 1.00 | LARDONE | GIB | CONTRE-FER | STELLEISTE | CHAVETA |
| 8 | | | 0322730158C | 1.00 | GUIDA | GUIDE | GUIDE | FUEHRUNG | GUIA |
| 8 | | | 0322730165G | 1.00 | GUIDA | GUIDE | GUIDE | FUEHRUNG | GUIA |
| 8 | | | 0322730166L | 1.00 | GUIDA | GUIDE | GUIDE | FUEHRUNG | GUIA |
| 8 | | | 0322732209D | 1.00 | GUIDA | GUIDE | GUIDE | FUEHRUNG | GUIA |
| 8 | | | 0322732219E | 1.00 | GUIDA | GUIDE | GUIDE | FUEHRUNG | GUIA |
| 9 | | | 0321960311D | 1.00 | PIASTRA | PLATE | PLAQUE | PLATTE | PLANCHA |
| 10 | | | 0321960373E | 1.00 | ECCENTRICO | ECCENTRIC | EXCENTRIQUE | NOCKEN | EXCENTRICO |
| 11 | | | 0522732104E | 1.00 | PROLUNGA | EXTENSION | RALLONGE | VERLAENGERUNG | EXTENSION |
| 11 | | | 0522732106L | 1.00 | PROLUNGA | EXTENSION | RALLONGE | VERLAENGERUNG | EXTENSION |
| 12 | | | 0322732208B | 1.00 | LAMIERA | PLATE | TOLE | BLECH | CHAPA |

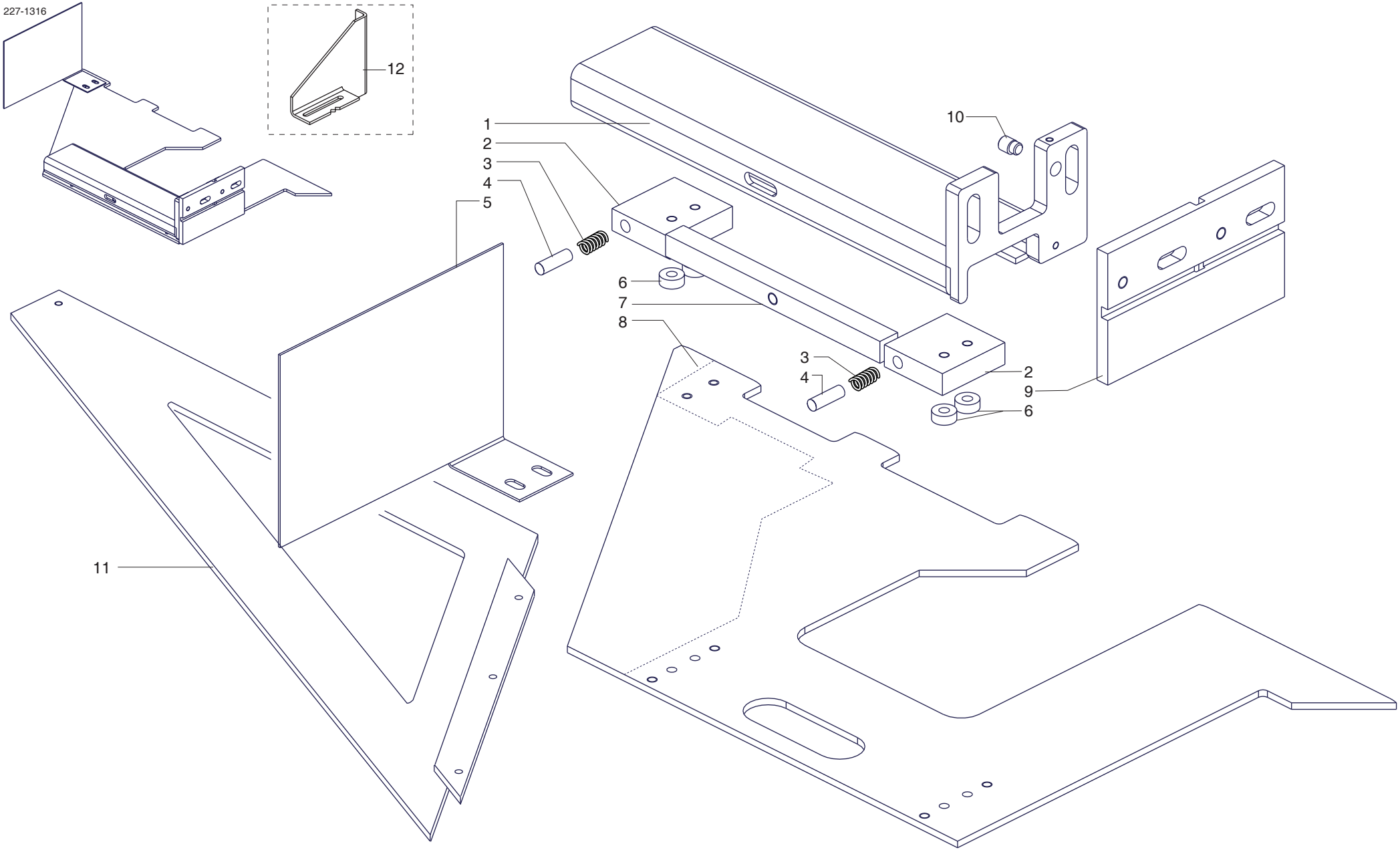


| | | | |
|---|---|---|---|
| scm | SUPERSET XL | GUIDA SINISTRA IN USCITA - (01.01.1901 -> - p.20,06,2007)<br>LEFT FENCE (EXIT SIDE) - GUIDE GAUCHE EN SORTIE<br>LINKER AUSGABEANSCHLAG - GUIA IZQUIERDA EN SALIDA | 227-1316-0 |

| scm | SUPERSET XL | GRUPPO SCATOLA TTL - (p.20,06,2007)<br>TTL BOX UNIT - GROUPE BOITE TTL<br>KASTEN TTL - GRUPO CAJA TTL | 227-1317-0 |
|---|---|---|---|

| N | P | C | CODICE | Q.TY | DENOMINAZIONE | DESCRIPTION | DESIGNATION | BEZEICHNUNG | DENOMINACION |
|---|---|---|---|---|---|---|---|---|---|
| | 01.01.1901 -> 01.01.3000 | | | | Note: 2822732045H | | | | |
| 1 | | | 0521930417G | 1.00 | COPERCHIO | COVER | COUVERCLE | DECKEL | TAPA |
| 2 | | | 0000644260A | 1.00 | ANELLO SEEGER | CIRCLIP | CIRCLIP | SEEGERRING | SEEGER |
| 3 | | | 0001307924D | 3.00 | FINECORSA | LIMIT SWITCH | FIN DE COURSE | ENDSCHALTER | FIN CARRERA |
| 4 | | | 0521930410B | 1.00 | CONTROLEVA | COUNTERLEVER | CONTRELEVIER | GEGENHEBEL | CONTRA PALANCA |
| 5 | | | 0522732047D | 1.00 | LEVA | LEVER | LEVIER | HEBEL | PALANCA |
| 5 | | | 0539057302D | 1.00 | LEVA | LEVER | LEVIER | HEBEL | PALANCA |
| 6 | | | 0319480113L | 1.00 | DISTANZIALE | SPACER | ENTRETOISE | DISTANZSTUECK | DISTANCIADOR |
| 7 | | | 0719480112F | 1.00 | RUOTA PRESSATRICE | WHEEL | ROUE | RAD | RUEDA PRENSORA |
| 8 | | | 0000305230F | 1.00 | ROSETTA | WASHER | RONDELLE | SCHEIBE | ARANDELA |
| 9 | | | 0000310245E | 1.00 | VITE | SCREW | VIS | SCHRAUBE | TORNILLO |
| 10 | | | 0000601070E | 4.00 | BOCCOLA | BUSHING | DOUILLE | BUCHSE | CASQUILLO |
| 11 | | | 0000613375G | 2.00 | RALLA | WASHER | CRAPAUDINE | SCHEIBE | RANGUA |
| 12 | | | 0321930412B | 1.00 | PERNO | PIN | PIVOT | STIFT | PERNO |
| 13 | | | 0521930413H | 1.00 | SCATOLA | BOX | BOITE | KASTEN | CAJA |
| 14 | | | 0000613022H | 2.00 | RALLA | WASHER | CRAPAUDINE | SCHEIBE | RANGUA |
| 15 | | | 0319014013B | 1.00 | POMELLO | BALL GRIP | GRIFFE | KUGELGRIFF | POMO |
| 16 | | | 0321930421A | 1.00 | TARGHETTA GRADUATA | RATING PLATE | PLAQUETTE | SCHILD | PLAQUA |
| 17 | | | 0521930416E | 1.00 | SLITTA | SLIDE | COULISSE | SCHLITTEN | CORREDERA |
| 18 | | | 0522732046B | 1.00 | SUPPORTO | SUPPORT | SUPPORT | STUETZE | SOPORTE |
| 19 | | | 0319014036A | 1.00 | POMELLO | BALL GRIP | GRIFFE | KUGELGRIFF | POMO |
| 20 | | | 0000613073F | 2.00 | RALLA | WASHER | CRAPAUDINE | SCHEIBE | RANGUA |
| 21 | | | 0324190811L | 1.00 | MOLLA | SPRING | RESSORT | FEDER | RESORTE |
| 22 | | | 0322371496E | 1.00 | MOLLA | SPRING | RESSORT | FEDER | RESORTE |
| 23 | | | 0326227315E | 1.00 | LENTE | LENS | LENTILLE | LUPE | LENTE |
| 24 | | | 0326215301A | 1.00 | MOSTRINA | PLATE | PLAQUETTE | PLAETTCHEN | TARJ. INDIC. |
| 25 | | | 0321930419G | 1.00 | CAMMA | CAM | CAME | KURVE | EXCENTRICO |

227-1317

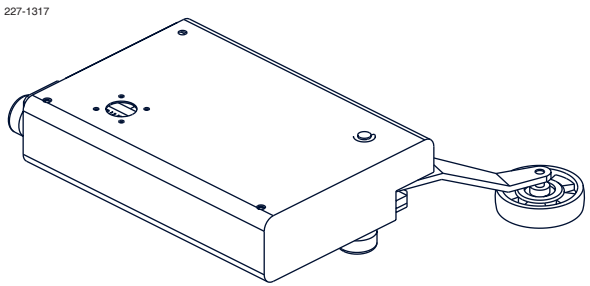

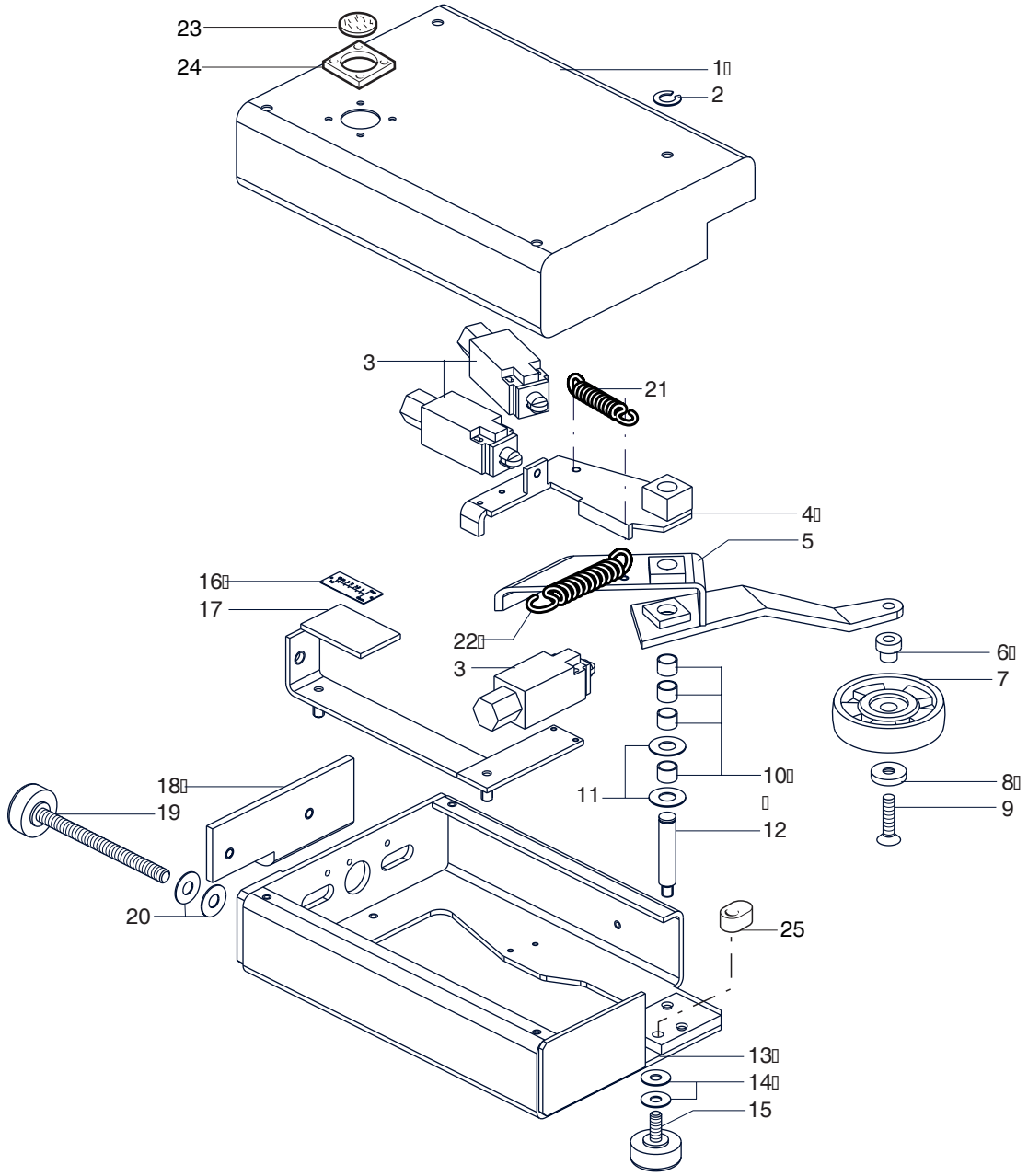


| | | | |
|---|---|---|---|
| scm | SUPERSET XL | GRUPPO SCATOLA TTL - (01.01.1901 -> - p.20,06,2007)<br>TTL BOX UNIT - GROUPE BOITE TTL<br>KASTEN TTL - GRUPO CAJA TTL | 227-1317-0 |

| scm | SUPERSET XL | POSIZIONAMENTO VERTICALE - (p.20,06,2007)<br>VERTICAL ADJUSTMENT - REGLAGE VERTICAL<br>VERTIKALVERSTELLUNG - UBICATION VERTICAL | 227-1318-0 |
|---|---|---|---|

| N | P | C | CODICE | Q.TY | DENOMINAZIONE | DESCRIPTION | DESIGNATION | BEZEICHNUNG | DENOMINACION |
|---|---|---|---|---|---|---|---|---|---|
| | 01.01.1901 -> 01.01.3000 | | | | Note: 2822732060L | | | | |
| | 1 | | 0319434402F | 1.00 | CARTER | COVER | CARTER | GEHAEUSE | CARTER |
| | 2 | | 0739736145G | 1.00 | ASS.ENCODER 300IMP/G | ASS.ENCODER 300IMP/G | ASS.ENCODER 300IMP/G | ASS.ENCODER 300IMP/G | ASS.ENCODER 300IMP/G |
| | 3 | | 0001331046A | 1.00 | MOTORE TRIF. FRENO C.C. | 3-PH. MOTOR D.C. BRAKE | MOTEUR 3-PH . FREIN C.C | 3-PH. MOTOR G.S. BREMSE | MOT. TRIFAS. FR. C.C. |
| | 4 | | 0321930124A | 2.00 | DISTANZIALE | SPACER | ENTRETOISE | DISTANZSTUECK | DISTANCIADOR |
| | 5 | | 0321930112E | 1.00 | SUPPORTO | SUPPORT | SUPPORT | STUETZE | SOPORTE |
| | 6 | | 0000639207C | 1.00 | RIDUTTORE | GEAR UNIT | REDUCTEUR | GETRIEBE | REDUCTOR |
| | 7 | | 0001352111D | 1.00 | PRESSACAVO DIR. | CLAMPING SCREW (STRAIGHT) | SERRECABLE DROIT | KABELENDE (GERADE) | TOMA-CABLES DERECHO |
| | 8 | | 0322732015B | 1.00 | SUPPORTO | SUPPORT | SUPPORT | STUETZE | SOPORTE |
| | 9 | | 0000613045G | 4.00 | RALLA | WASHER | CRAPAUDINE | SCHEIBE | RANGUA |
| | 10 | | 0000613041H | 2.00 | GABBIA A RULLINI | ROLLER CAGE | CAGE A ROULEAUX | WALZENKAEFIG | COJINETE |
| | 11 | | 0317521504D | 2.00 | ANELLO | RING | BAGUE | RING | ANILLO |
| | 12 | | 0000301853D | 1.00 | GHIERA | COLLAR | EMBOUT | NUTMUTTER | COLLAR |
| | 13 | | 0321930129B | 1.00 | FLANGIA | FLANGE | FLASQUE | FLANSCH | BRIDA |
| | 14 | | 0000645059F | 1.00 | LINGUETTA | FEATHER KEY | LANGUETTE | FEDERKEIL | LINGUETA |
| | 15 | | 0522732061C | 1.00 | ASTA | ROD | TIGE | STANGE | ASTA |
| | 16 | | 0366535401E | 1.00 | INTERFACCIA | RING NUT | EMBOUT | STELLRING | CONEXION |
| | 17 | | 0766535414B | 1.00 | MOTORE | MOTOR | MOTEUR | MOTOR | MOTOR |

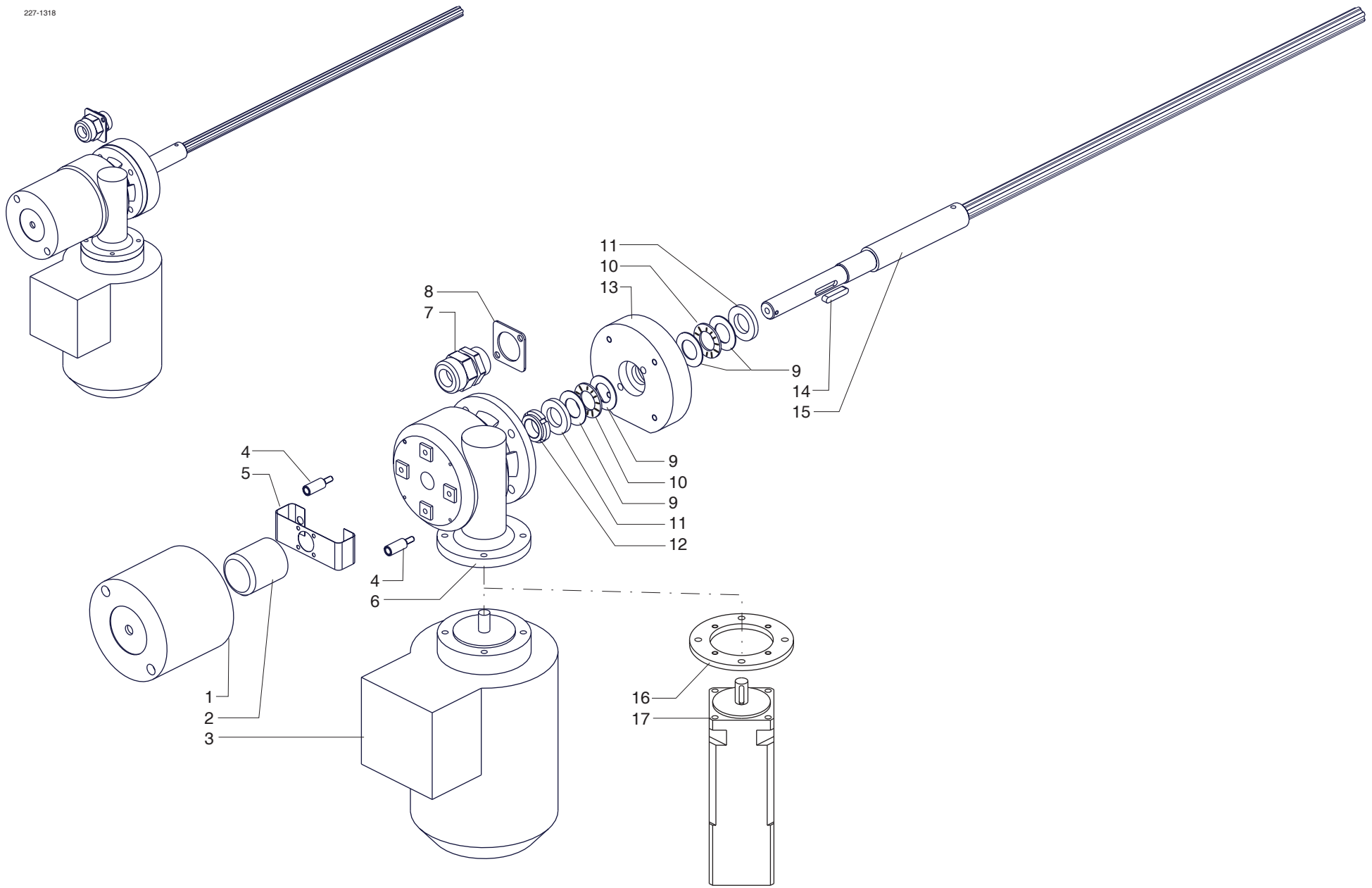


| | | | |
|---|---|---|---|
| scm | SUPERSET XL | POSIZIONAMENTO VERTICALE - (01.01.1901 -> - p.20,06,2007)<br>VERTICAL ADJUSTMENT - REGLAGE VERTICAL<br>VERTIKALVERSTELLUNG - UBICATION VERTICAL | 227-1318-0 |

| scm | SUPERSET XL | POSIZIONAMENTO ORIZZONTALE "TTL" - (p.20,06,2007)<br>"TTL" HORIZONAL ADJUSTMENT - REGLAGE HORIZONTAL "TTL"<br>"TTL" HORIZONTALVERSTELLUNG - UBICACION HORIZONTAL "TTL" | 227-1319-0 |
|---|---|---|---|

| N | P | C | CODICE | Q.TY | DENOMINAZIONE | DESCRIPTION | DESIGNATION | BEZEICHNUNG | DENOMINACION |
|---|---|---|---|---|---|---|---|---|---|
| | 01.01.1901 -> 01.01.3000 | | | | Note: 2822732030F | | | | |
| 1 | | | 0321930406L | 1.00 | VOLANTINO | HANDWHEEL | VOLANT | HANDRAD | VOLANTE |
| 2 | | | 0322732035D | 1.00 | COPERCHIO | COVER | COUVERCLE | DECKEL | TAPA |
| 3 | | | 0321930409F | 1.00 | PULEGGIA MOTRICE | PULLEY | POULIE | RIEMENSCHEIBE | POLEA |
| 3 | | | 0321930418E | 1.00 | PULEGGIA MOTRICE | PULLEY | POULIE | RIEMENSCHEIBE | POLEA |
| 4 | | | 0000604381H | 1.00 | CINGHIA DENTATA | TOOTHED BELT | COURROIE DENTEE | ZAHNRIEMEN | CORREA DENTADA |
| 4 | | | 0000604389F | 1.00 | CINGHIA DENTATA | TOOTHED BELT | COURROIE DENTEE | ZAHNRIEMEN | CORREA DENT. |
| 5 | | | 0321930408D | 1.00 | PULEGGIA CONDOTTA | PULLEY | POULIE | RIEMENSCHEIBE | POLEA |
| 6 | | | 0000301559A | 1.00 | GHIERA | RING NUT | EMBOUT | NUTMUTTER | COLLAR |
| 7 | | | 0000301876C | 2.00 | GHIERA | RING NUT | EMBOUT | NUTMUTTER | COLLAR |
| 8 | | | 0339715043F | 2.00 | DISTANZIALE | SPACER | ENTRETOISE | DISTANZSTUECK | DISTANCIADOR |
| 9 | | | 0000702331B | 2.00 | GUARNIZIONE | GASKET | JOINT | DICHTUNG | JUNTA |
| 10 | | | 0339735021D | 1.00 | GHIERA | RING NUT | EMBOUT | NUTMUTTER | COLLAR |
| 11 | | | 0000608108E | 2.00 | CUSC.ALTA P. | HIGH PRECISION BEARING | ROULEMENT HAUTE PRECISION | HOCHPRAEZISIONSLAGER | COJ.ALTA PREC. |
| 12 | | | 0522732032B | 2.00 | SUPPORTO | SUPPORT | SUPPORT | STUETZE | SOPORTE |
| 13 | | | 0001337791G | 1.00 | MOTORE TRIF. CON FR.EL. | 3-PH. MOTOR WITH BRAKE | 3-PH. MOTEUR FREIN ELECT | 3-PH. MOTOR M. EL.BREMS | MOT.TRIFAS.FR.ELE. |
| 14 | | | 0000645092E | 1.00 | LINGUETTA | FEATHER KEY | LANGUETTE | FEDERKEIL | LINGUETA |
| 15 | | | 0722732033H | 1.00 | VITE+CHIOC.RIC | SCREW + LEAD NUT | VIS + ECROU (DESSIN) | SCHNECKE +MUTTER (ZEICHN. | TORN+TUER A DIBUJO |
| 16 | | | 0322732031E | 1.00 | FLANGIA | FLANGE | FLASQUE | FLANSCH | BRIDA |
| 17 | | | 0000640178C | 1.00 | CAVETTO | CABLE | CABLE | KABEL | CABLE |
| 18 | | | 0322732034B | 1.00 | SUPPORTO | SUPPORT | SUPPORT | STUETZE | SOPORTE |
| 19 | | | 0323835601B | 1.00 | BOCCOLA | BUSHING | DOUILLE | BUCHSE | CASQUILLO |
| 20 | | | 0733521168C | 1.00 | ASS.ENCODER 100IMP/G | ASS.ENCODER 100IMP/G | ASS.ENCODER 100IMP/G | ASS.ENCODER 100IMP/G | ASS.ENCODER 100IMP/G |
| 20 | | | 0739736141H | 1.00 | ENCODER | ENCODER | ENCODER | ENCODER | ENCODER |
| 20 | | | 2723843006A | 1.00 | ENCODER | ENCODER | ENCODER | ENCODER | ENCODER |
| 21 | | | 0322732003F | 1.00 | SUPPORTO | SUPPORT | SUPPORT | STUETZE | SOPORTE |
| 22 | | | 9622089002B | 1.00 | POSIZIONATORE | POSITIONER | POSITIONNEUR | STELLWERK | POSICIONADOR |

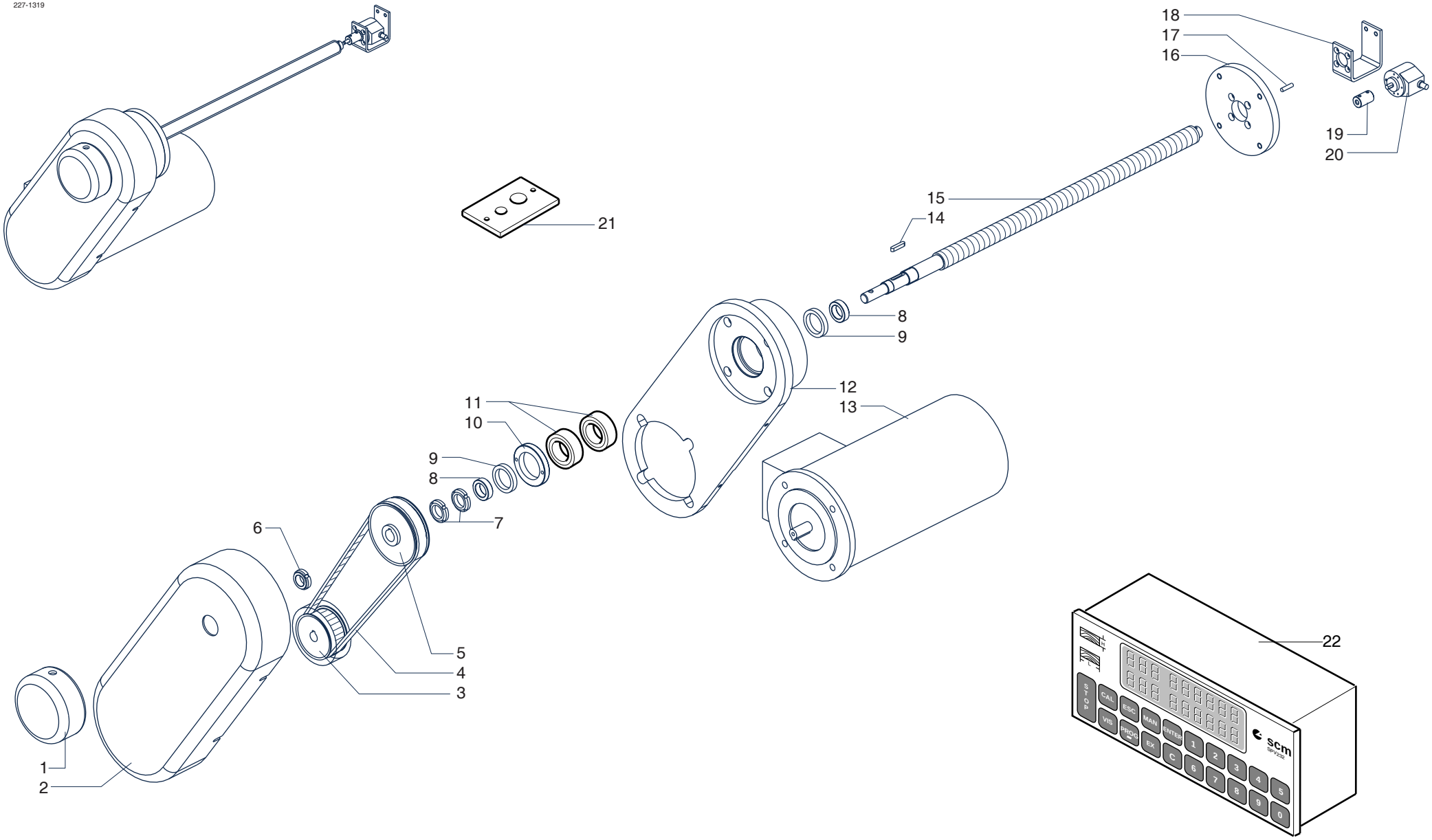


| scm | SUPERSET XL | POSIZIONAMENTO ORIZZONTALE "TTL" - (01.01.1901 -> - p.20,06,2007)<br>"TTL" HORIZONAL ADJUSTMENT - REGLAGE HORIZONTAL "TTL"<br>"TTL" HORIZONTALVERSTELLUNG - UBICACION HORIZONTAL "TTL" | 227-1319-0 |
|---|---|---|---|

| scm | SUPERSET XL | POSIZIONAMENTO ORIZZONTALE - (p.20,06,2007)<br>HORIZONTAL ADJUSTMENT - REGLAGE HORIZONTAL<br>HORIZONTALVERSTELLUNG - UBICACION HORIZONTAL | 227-1320-0 |
|---|---|---|---|

| N | P | C | CODICE | Q.TY | DENOMINAZIONE | DESCRIPTION | DESIGNATION | BEZEICHNUNG | DENOMINACION |
|---|---|---|---|---|---|---|---|---|---|
| | 01.01.1901 -> 01.01.3000 | | | | Note: 2822732055L | | | | |
| | 1 | | 0000635039B | 1.00 | INDICATORE NUMERICO | INDICATOR | INDICATEUR | ANZEIGER | INDICADOR |
| | 1 | | 0000635270A | 1.00 | INDICATORE NUMERICO | INDICATOR | INDICATEUR | ANZEIGER | INDICADOR NUMERICO |
| | 2 | | 0322732057A | 1.00 | PERNO | PIN | PIVOT | BOLZEN | PERNO |
| | 3 | | 0001331046A | 1.00 | MOTORE TRIF. FRENO C.C. | 3-PH. MOTOR D.C. BRAKE | MOTEUR 3-PH . FREIN C.C | 3-PH. MOTOR G.S. BREMSE | MOT. TRIFAS. FR. C.C. |
| | 4 | | 0000309199E | 2.00 | VITE | SCREW | VIS | SCHRAUBE | TORNILLO |
| | 5 | | 0322732056H | 1.00 | FLANGIA | FLANGE | FLASQUE | FLANSCH | BRIDA |
| | 6 | | 0000637058D | 1.00 | RIDUTTORE | GEAR UNIT | REDUCTEUR | GETRIEBE | REDUCTOR |
| | 7 | | 0000640018D | 1.00 | TAPPO | CAP | BOUCHON | STOPFEN | TAPON |
| | 8 | | 0000645059F | 1.00 | LINGUETTA | FEATHER KEY | LANGUETTE | FEDERKEIL | LINGUETA |
| | 9 | | 0000613045G | 4.00 | RALLA | WASHER | CRAPAUDINE | SCHEIBE | RANGUA |
| | 10 | | 0000613041H | 2.00 | GABBIA A RULLINI | ROLLER CAGE | CAGE A ROULEAUX | WALZENKAEFIG | COJINETE |
| | 11 | | 0317521504D | 2.00 | ANELLO | RING | BAGUE | RING | ANILLO |
| | 12 | | 0000301853D | 1.00 | GHIERA | COLLAR | EMBOUT | NUTMUTTER | COLLAR |
| | 13 | | 0321930129B | 1.00 | FLANGIA | FLANGE | FLASQUE | FLANSCH | BRIDA |
| | 14 | | 0322732004H | 1.00 | VITE | SCREW | VIS | SCHRAUBE | TORNILLO |
| | 15 | | 2722732212A | 1.00 | ASS. VALVOLE | VALVE UNIT | ENSEMBLE VALVES | VENTILE-EINHEIT | CONJ. VALVULAS |
| | 16 | | 0001500415H | 2.00 | VALVOLA | VALVE | SOUPAPE | VENTIL | VALVULA |
| | 17 | | 0001344098F | 1.00 | ELETTROVALVOLA V.110 | SOLENOID VALVE | ELECTROVALVE | MAGNETVENTIL | ELECTROVALVULA |
| | 18 | | 0001502498F | 2.00 | VALVOLA | VALVE | VALVE | VENTIL | VALV. |

227-1320

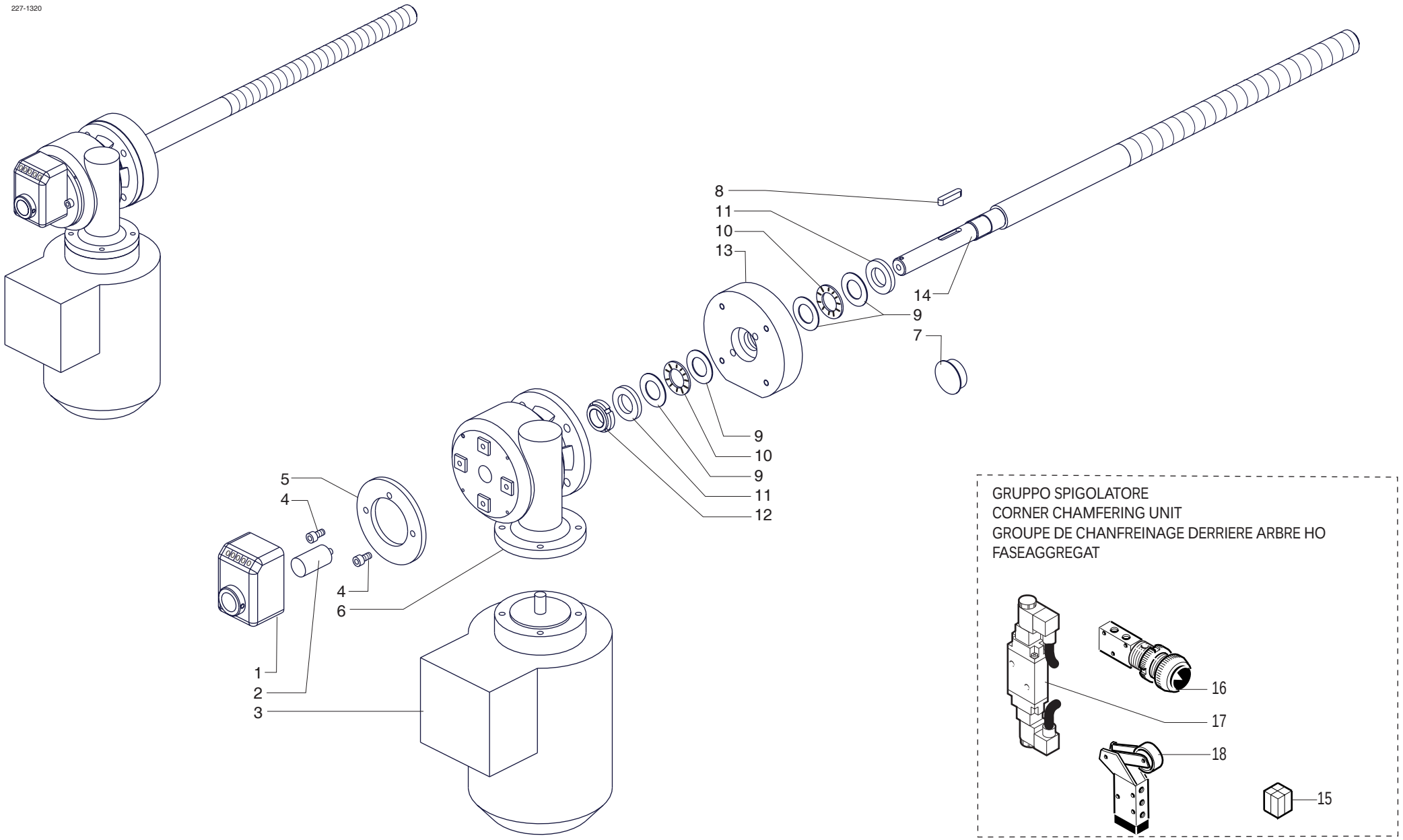


GRUPPO SPIGOLATORE
CORNER CHAMFERING UNIT
GROUPE DE CHANFREINAGE DERRIERE ARBRE HO
FASEAGGREGAT




| | | | |
|---|---|---|---|
| scm | SUPERSET XL | **POSIZIONAMENTO ORIZZONTALE - (01.01.1901 -> - p.20,06,2007)**<br>**HORIZONTAL ADJUSTMENT - REGLAGE HORIZONTAL**<br>**HORIZONTALVERSTELLUNG - UBICACION HORIZONTAL** | **227-1320-0** |

| scm | SUPERSET XL | PRESSATORE IN USCITA (VERSIONE "TTL") - (p.20,06,2007)<br>PRESSER (EXIT SIDE) ("TTL" VERSION) - PRESSEUR EN SORTIE (VERSION "TTL")<br>AUSGANGSDRUCKELEMENT ("TTL" VERSION) - PRENSOR EN SALIDA ("TTL" VERSION) | 227-1321-0 |
|---|---|---|---|

| N | P | C | CODICE | Q.TY | DENOMINAZIONE | DESCRIPTION | DESIGNATION | BEZEICHNUNG | DENOMINACION |
|---|---|---|---|---|---|---|---|---|---|
| | 01.01.1901 -> 01.01.3000 | | | | Note: 2822732040G | | | | |
| | 1 | | 0321930439L | 1.00 | PRESSATORE | PRESSER | PRESSEUR | DRUCKELEMENT | PRENSADOR |
| | 2 | | 0321930441C | 1.00 | SUPPORTO | SUPPORT | SUPPORT | STUETZE | SOPORTE |
| | 3 | | 0300924702E | 1.00 | MOLLA | SPRING | RESSORT | FEDER | RESORTE |
| | 4 | | 0321930442E | 1.00 | PERNO | PIN | PIVOT | STIFT | PERNO |
| | 5 | | 0522732041A | 1.00 | SUPPORTO | SUPPORT | SUPPORT | STUETZE | SOPORTE |
| | 6 | | 0000301849F | 1.00 | GHIERA | RING NUT | EMBOUT | NUTMUTTER | COLLAR |
| | 7 | | 0000606244A | 2.00 | CUSCINETTO | BEARING | ROULEMENT | LAGER | COJINETE |
| | 8 | | 0322732042H | 1.00 | SUPPORTO | SUPPORT | SUPPORT | STUETZE | SOPORTE |
| | 9 | | 0000309323H | 2.00 | VITE | SCREW | VIS | SCHRAUBE | TORNILLO |
| | 10 | | 0321930443G | 1.00 | MOLLA | SPRING | RESSORT | FEDER | RESORTE |
| | 11 | | 0321930444L | 1.00 | PERNO | PIN | PIVOT | STIFT | PERNO |
| | 12 | | 0321930448H | 1.00 | LEVA | LEVER | LEVIER | HEBEL | PALANCA |

227-1321

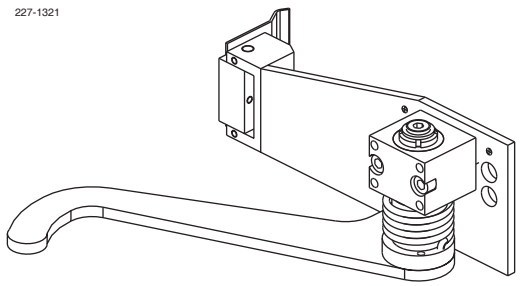

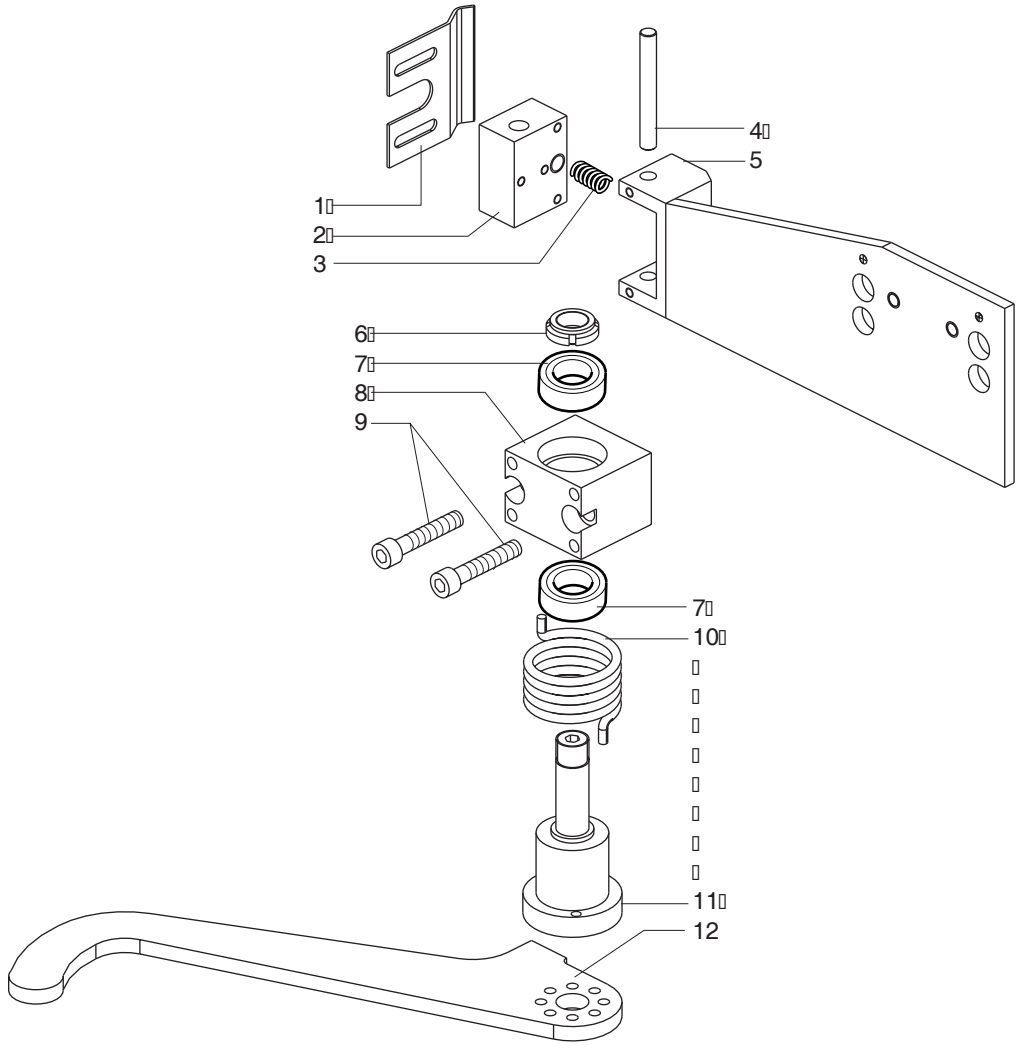


| scm | SUPERSET XL | PRESSATORE IN USCITA (VERSIONE "TTL") - (01.01.1901 -> - p.20,06,2007)<br>PRESSER (EXIT SIDE) ("TTL" VERSION) - PRESSEUR EN SORTIE (VERSION "TTL")<br>AUSGANGSDRUCKELEMENT ("TTL" VERSION) - PRENSOR EN SALIDA ("TTL" VERSION) | 227-1321-0 |
|---|---|---|---|

| scm | SUPERSET XL | DISPOSITIVO ANTICOLLISIONE - (p.20,06,2007)<br>EMERGENCY DEVICE - DISPOSITIF D'URGENCE<br>NOT-AUS-VORRICHTUNG - DISPOSITIVO DE EMERGENCIA | 227-1322-0 |
|---|---|---|---|

| N | P | C | CODICE | Q.TY | DENOMINAZIONE | DESCRIPTION | DESIGNATION | BEZEICHNUNG | DENOMINACION |
|---|---|---|---|---|---|---|---|---|---|
| | 01.01.1901 -> 01.01.3000 | | | | Note: ----- | | | | |
| | 1 | | 0319012601G | 1.00 | POMOLO | BALL GRIP | POIGNEE | KUGELGRIFF | POMO |
| | 2 | | 0000304320F | 1.00 | VITE | SCREW | VIS | SCHRAUBE | TORNILLO |
| | 3 | | 0000305302L | 1.00 | ROSETTA | WASHER | RONDELLE | SCHEIBE | ARANDELA |
| | 4 | | 0322740921D | 1.00 | PIATTO | PLATE | PLAT | PLATTE | PLATO |
| | 5 | | 0000309121L | 1.00 | VITE | SCREW | VIS | SCHRAUBE | TORNILLO |
| | 6 | | 0522740923C | 1.00 | BANDELLA | GUARD | PROTECTION | SCHUTZ | BANDA |
| | 7 | | 0736237069E | 4.00 | CONN.M LUNGO + MICRO | CONN.M LUNGO + | CONN.M LUNGO + | CONN.M LUNGO + | CONN.M LUNGO + |
| | 8 | | 0522740922A | 1.00 | MENSOLA | BRACKET | CONSOLE | KONSOLE | MENSULA |
| | 9 | | 0322740924A | 1.00 | CARTER | COVER | CARTER | DECKEL | CARTER |

5222706047A

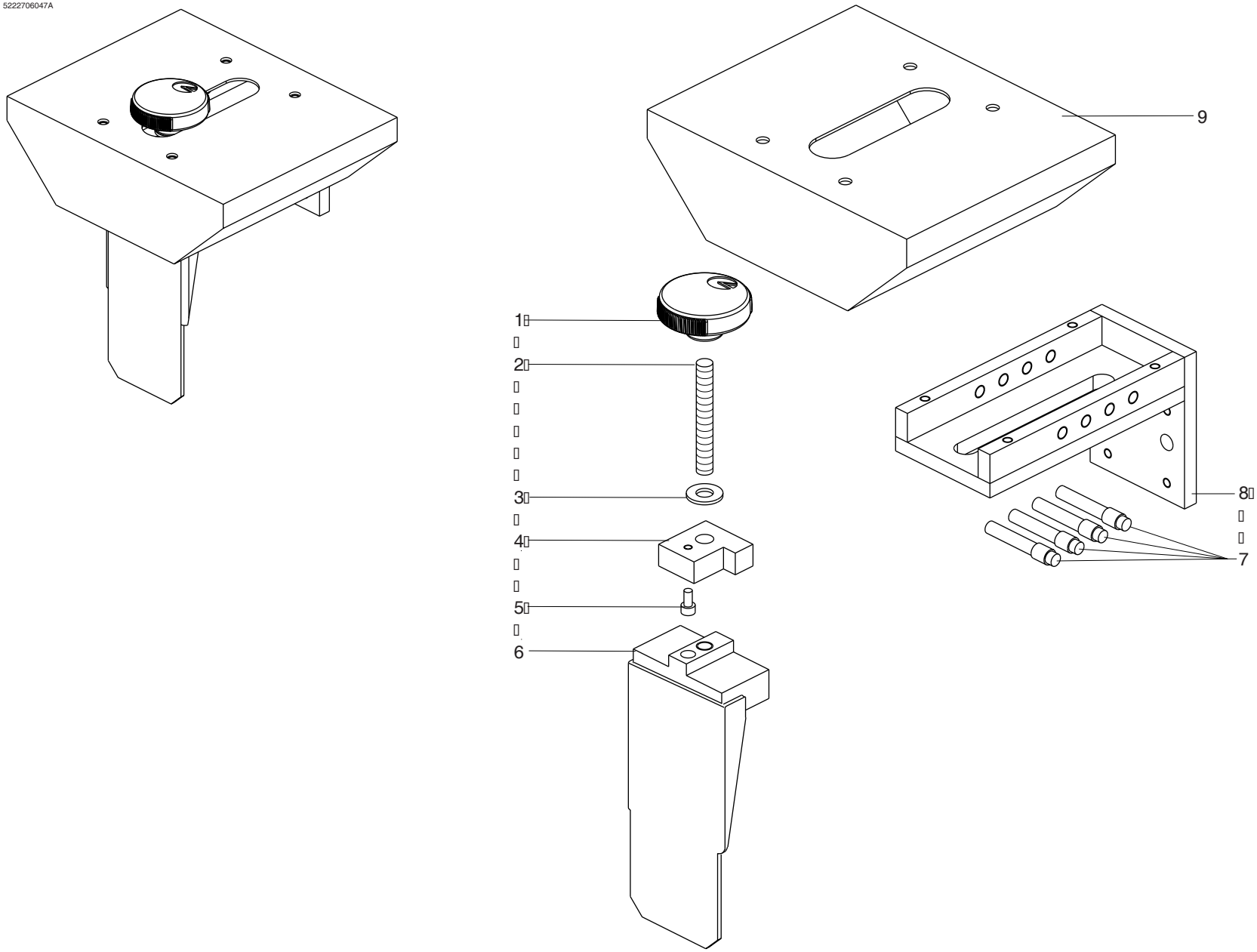


| scm | SUPERSET XL | DISPOSITIVO ANTICOLLISIONE - (01.01.1901 -> - p.20,06,2007)<br>EMERGENCY DEVICE - DISPOSITIF D'URGENCE<br>NOT-AUS-VORRICHTUNG - DISPOSITIVO DE EMERGENCIA | 227-1322-0 |
|---|---|---|---|

| scm | SUPERSET XL | ALBERO ORIZZONTALE SUPERIORE - (p.20,06,2007)<br>TOP HORIZONTAL SPINDLE - ARBRE HORIZONTAL SUPERIEUR<br>OBERE HORIZONTALWELLE - EJE HORIZONTAL SUPERIOR | 227-1400-0 |
|---|---|---|---|

| N | P | C | CODICE | Q.TY | DENOMINAZIONE | DESCRIPTION | DESIGNATION | BEZEICHNUNG | DENOMINACION |
|---|---|---|---|---|---|---|---|---|---|
| | 01.01.1901 -> 01.01.3000 | | | | Note: 3122730500G | | | | |
| | 1 | | 1111111111F | 0.00 | INDICE | POINTER | INDICATEUR | ZEIGER | INDICE |

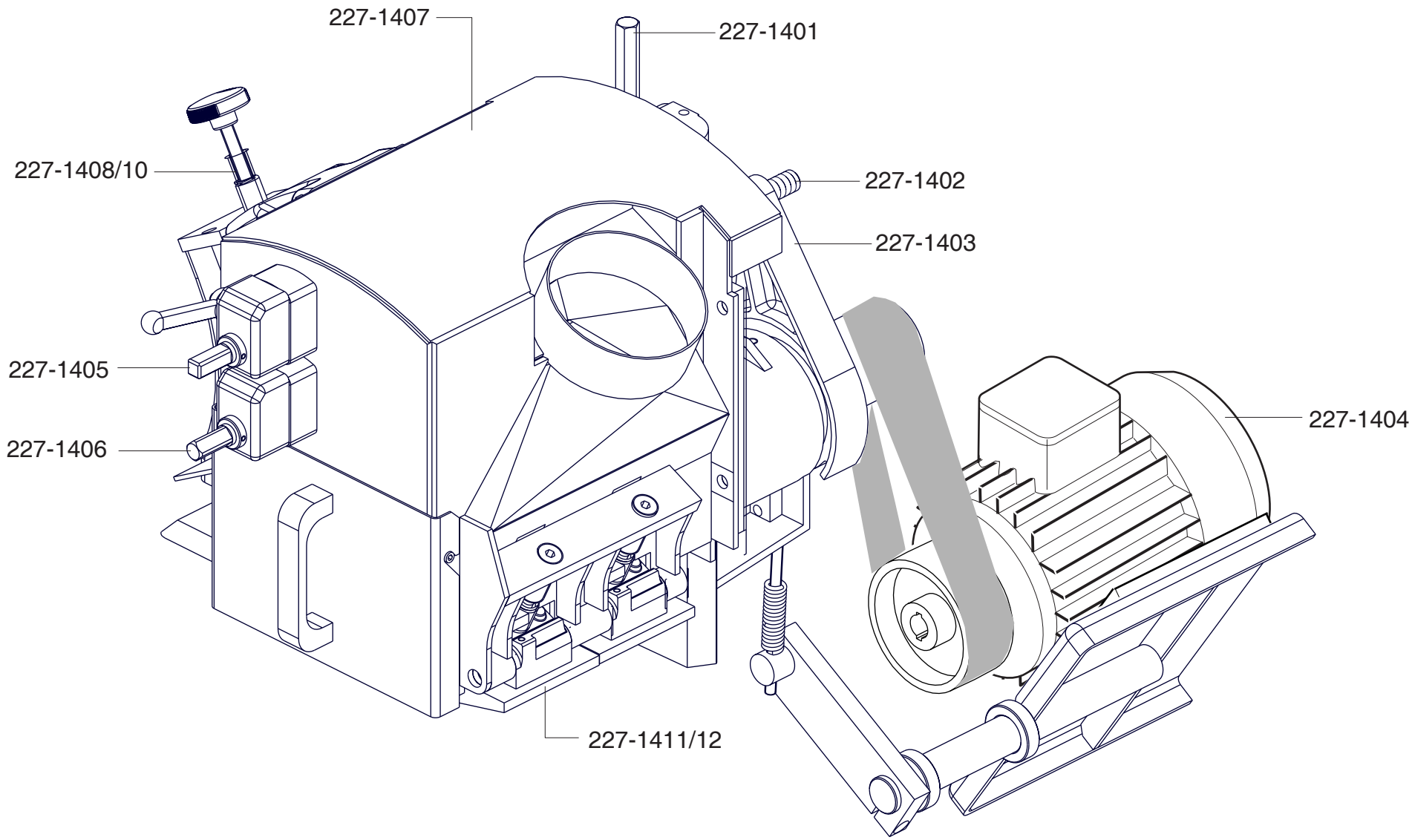


| | | | |
|---|---|---|---|
| scm | SUPERSET XL | ALBERO ORIZZONTALE SUPERIORE - (01.01.1901 -> - p.20,06,2007)<br>TOP HORIZONTAL SPINDLE - ARBRE HORIZONTAL SUPERIEUR<br>OBERE HORIZONTALWELLE - EJE HORIZONTAL SUPERIOR | 227-1400-0 |

| N | P | C | CODICE | Q.TY | DENOMINAZIONE | DESCRIPTION | DESIGNATION | BEZEICHNUNG | DENOMINACION |
|---|---|---|---|---|---|---|---|---|---|
| | 01.01.1901 -> 01.01.3000 | | | | Note: 2822730540F | | | | |
| | 1 | | 0321930014G | 1.00 | VITE | SCREW | VIS | SCHRAUBE | TORNILLO |
| | 2 | | 0319441002F | 1.00 | MADREVITE | NUT SCREW | VIS-MERE | MUTTERGEWINDE | TUERCA |
| | 3 | | 0322730616E | 1.00 | SLITTA | SLIDE | COULISSE | SCHLITTEN | CORREDERA |

227-1401

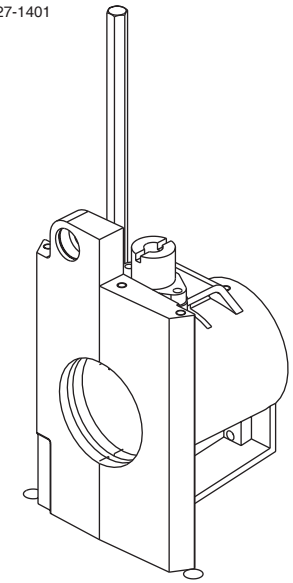

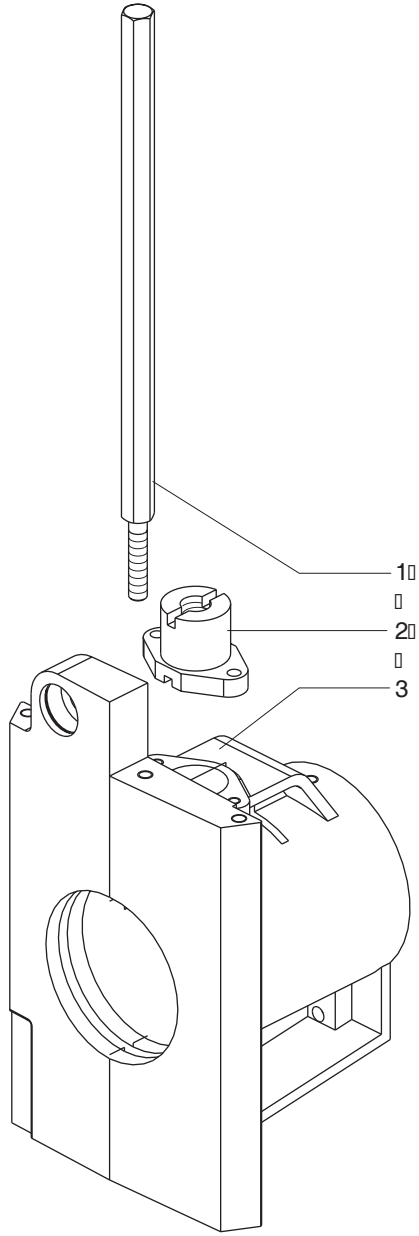

| N | P | C | CODICE | Q.TY | DENOMINAZIONE | DESCRIPTION | DESIGNATION | BEZEICHNUNG | DENOMINACION |
|---|---|---|---|---|---|---|---|---|---|
| | 01.01.1901 -> 01.01.3000 | | | | Note: 2822730545G | | | | |
| | 1 | | 0722740132H | 1.00 | GIUNTO | JOINT | JOINT | KUPPLUNG | JUNTA |
| | 2 | | 0000644036F | 1.00 | ANELLO SEEGER | CIRCLIP | CIRCLIP | SEEGERRING | SEEGER |
| | 3 | | 0000613045G | 5.00 | RALLA | WASHER | CRAPAUDINE | SCHEIBE | RANGUA |
| | 4 | | 0000613041H | 2.00 | GABBIA A RULLINI | ROLLER CAGE | CAGE A ROULEAUX | WALZENKAEFIG | COJINETE |
| | 5 | | 0316330020C | 1.00 | RONDELLA | WASHER | RONDELLE | SCHEIBE | ARANDELA |
| | 6 | | 0322730621E | 1.00 | VITE | SCREW | VIS | SCHRAUBE | TORNILLO |

227-1402

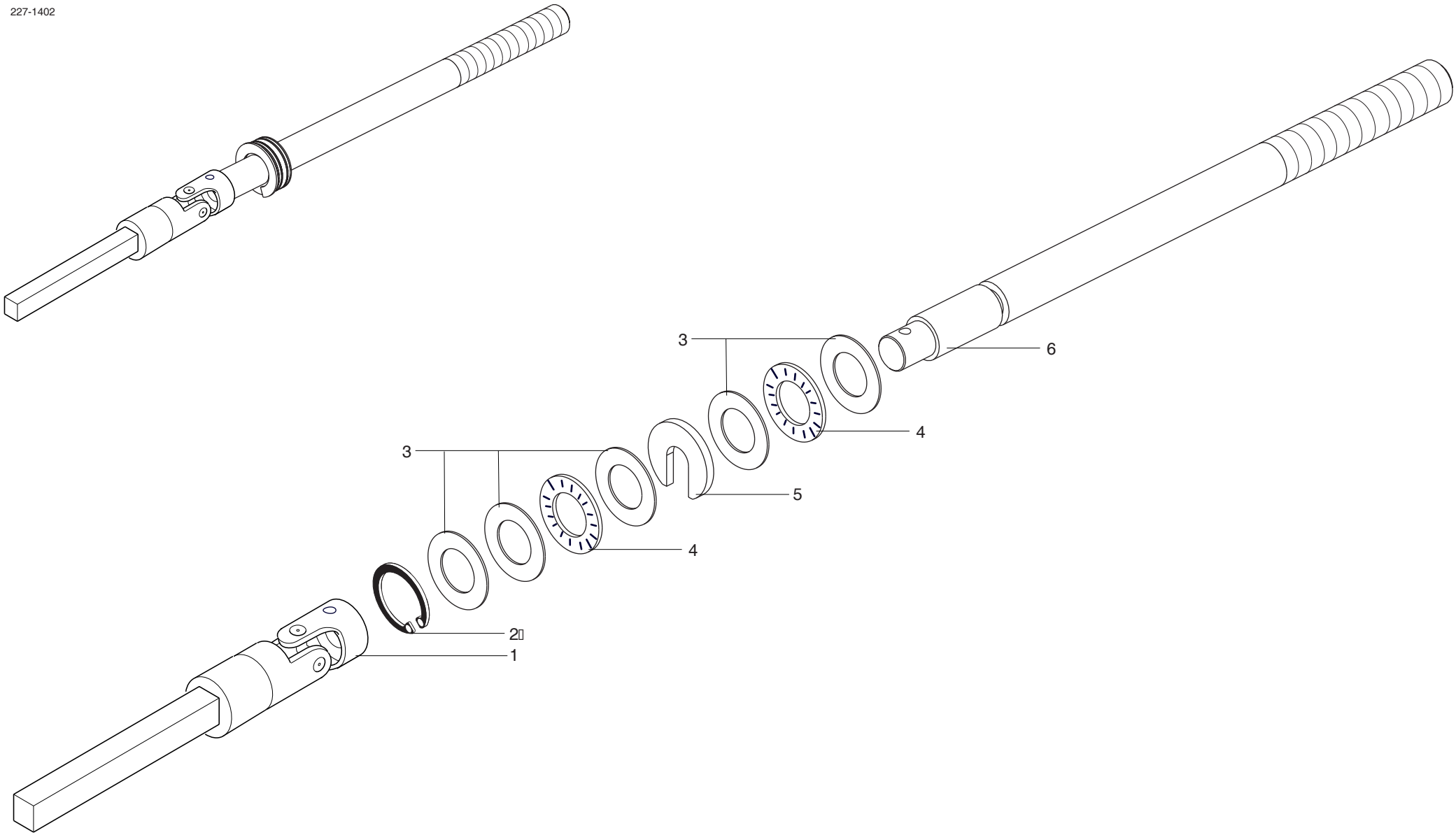


| | | | |
|---|---|---|---|
| scm | SUPERSET XL | POSIZIONAMENTO ORIZZONTALE MANUALE - (01.01.1901 -> - p.20,06,2007)<br>MANUAL HORIZONTAL ADJUSTMENT - REGLAGE HORIZONTAL MANUEL<br>MANUELLE HORIZONTALVERSTELLUNG - UBICACION HORIZONTAL MANUAL | 227-1402-0 |

| N | P | C | CODICE | Q.TY | DENOMINAZIONE | DESCRIPTION | DESIGNATION | BEZEICHNUNG | DENOMINACION |
|---|---|---|---|---|---|---|---|---|---|
| | 01.01.1901 -> 01.01.3000 | | | | Note: 2822730530E | | | | |
| | 1 | | 0000308565A | 1.00 | VITE | SCREW | VIS | SCHRAUBE | TORNILLO |
| | 1 | | 0000308566C | 1.00 | VITE | SCREW | VIS | SCHRAUBE | TORNILLO |
| | 2 | | 0327430300B | 1.00 | RONDELLA | WASHER | RONDELLE | SCHEIBE | ARANDELA |
| | 3 | | 0316036400C | 1.00 | ANELLO CON DENTATURA D=40 | RING | BAGUE | RING | ANILLO |
| | 3 | | 0516036600B | 1.00 | ANELLO CON DENTATURA D=35 | RING | BAGUE | RING | ANILLO |
| | 3 | | 2739030101B | 1.00 | ANELLO CON DENTATURA | RING | BAGUE | RING | ANILLO |
| | 4 | | 0319433349C | 1.00 | GHIERA | RING NUT | EMBOUT | NUTMUTTER | COLLAR |
| | 4 | | 0319433350D | 1.00 | GHIERA | RING NUT | EMBOUT | NUTMUTTER | COLLAR |
| | 5 | | 0319433348A | 1.00 | ANELLO | RING | BAGUE | RING | ANILLO |
| | 6 | | 0000606139H | 1.00 | CUSCINETTO | BEARING | ROULEMENT | LAGER | COJINETE |
| | 6 | | 0000606170C | 1.00 | CUSCINETTO | BEARING | ROULEMENT | LAGER | COJINETE |
| | 6 | | 0000609068A | 1.00 | CUSCINETTO | BEARING | ROULEMENT | LAGER | COJINETE |
| | 6 | | 0766547299B | 2.00 | CUSCINETTO | BEARING | ROULEMENT | LAGER | COJINETE |
| | 7 | | 0319435704H | 1.00 | ALBERO TOUPIE | SPINDLE | ARBRE | FRAESSPINDEL | EJE |
| | 7 | | 0319435710A | 1.00 | ALBERO TOUPIE | SPINDLE | ARBRE | FRAESSPINDEL | EJE |
| | 7 | | 0319435713G | 1.00 | ALBERO TOUPIE | SPINDLE | ARBRE | FRAESSPINDEL | EJE |
| | 7 | | 0319435714L | 1.00 | ALBERO TOUPIE | SPINDLE | ARBRE | FRAESSPINDEL | EJE |
| | 7 | | 0319435715B | 1.00 | ALBERO TOUPIE | SPINDLE | ARBRE | FRAESSPINDEL | EJE |
| | 7 | | 0319435716D | 1.00 | ALBERO TOUPIE | SPINDLE | ARBRE | FRAESSPINDEL | EJE |
| | 7 | | 0319435782C | 1.00 | ALBERO TOUPIE | SPINDLE | ARBRE | FRAESSPINDEL | EJE |
| | 7 | | 0322712000E | 1.00 | ALBERO TOUPIE | SPINDLE | ARBRE | FRAESSPINDEL | EJE |
| | 7 | | 0322712001G | 1.00 | ALBERO TOUPIE | SPINDLE | ARBRE | FRAESSPINDEL | EJE |
| | 7 | | 0322712002L | 1.00 | ALBERO TOUPIE | SPINDLE | ARBRE | FRAESSPINDEL | EJE |
| | 7 | | 0322730026C | 1.00 | ALBERO TOUPIE D=35 | SPINDLE | ARBRE | FRAESSPINDEL | EJE |
| | 8 | | 0319433371H | 1.00 | CILINDRO | CYLINDER | CYLINDRE | ZYLINDER | CILINDRO |
| | 8 | | 0322711002H | 1.00 | CILINDRO | CYLINDER | CYLINDRE | ZYLINDER | CILINDRO |
| | 9 | | 0000645169L | 1.00 | LINGUETTA | FEATHER KEY | LANGUETTE | FEDERKEIL | LINGUETA |
| | 10 | | 0000617759G | 6.00 | MOLLA TAZZA | SPRING | RESSORT | TELLERFEDER | RESORTE |
| | 11 | | 0319435570C | 1.00 | DISTANZIALE | SPACER | ENTRETOISE | DISTANZSTUECK | DISTANCIADOR |
| | 12 | | 0000606165C | 1.00 | CUSCINETTO | BEARING | ROULEMENT | LAGER | COJINETE |
| | 12 | | 0000608161F | 1.00 | CUSC.ALTA P. | HIGH PRECISION BEARING | ROULEMENT HAUTE PRECISION | HOCHPRAEZISIONSLAGER | COJ.ALTA PREC. |
| | 12 | | 0766547297G | 1.00 | CUSCINETTO (COPPIA) | BEARING | ROULEMENT | LAGER | COJINETE |
| | 12 | | 0766547298L | 1.00 | CUSCINETTO | BEARING | ROULEMENT | LAGER | COJINETE |
| | 13 | | 0319431141H | 1.00 | PULEGGIA CONDOTTA | PULLEY | POULIE | RIEMENSCHEIBE | POLEA |
| | 14 | | 0322730620C | 1.00 | MADREVITE | NUT SCREW | VIS-MERE | MUTTERGEWINDE | TUERCA |
| | 15 | | 0319431142A | 1.00 | RONDELLA | WASHER | RONDELLE | SCHEIBE | ARANDELA |
| | 16 | | 0000308440E | 1.00 | VITE | SCREW | VIS | SCHRAUBE | TORNILLO |
| | 17 | | 0322730311G | 1.00 | BLOCCAGGIO | LOCKING DEVICE | BLOCAGE | SPERRE | BLOQUEO |
| | 17 | | 0322730316H | 1.00 | BLOCCAGGIO | LOCKING DEVICE | BLOCAGE | SPERRE | BLOQUEO |

| scm | SUPERSET XL | ALBERO PIALLA - (p.20,06,2007)<br>CUTTERBLOCK - ARBRE PORTE-COUTEAUX<br>MESSERWELLE - EJE CEPILLO | 227-1403-0 |
|---|---|---|---|

| N | P | C | CODICE | Q.TY | DENOMINAZIONE | DESCRIPTION | DESIGNATION | BEZEICHNUNG | DENOMINACION |
|---|---|---|---|---|---|---|---|---|---|

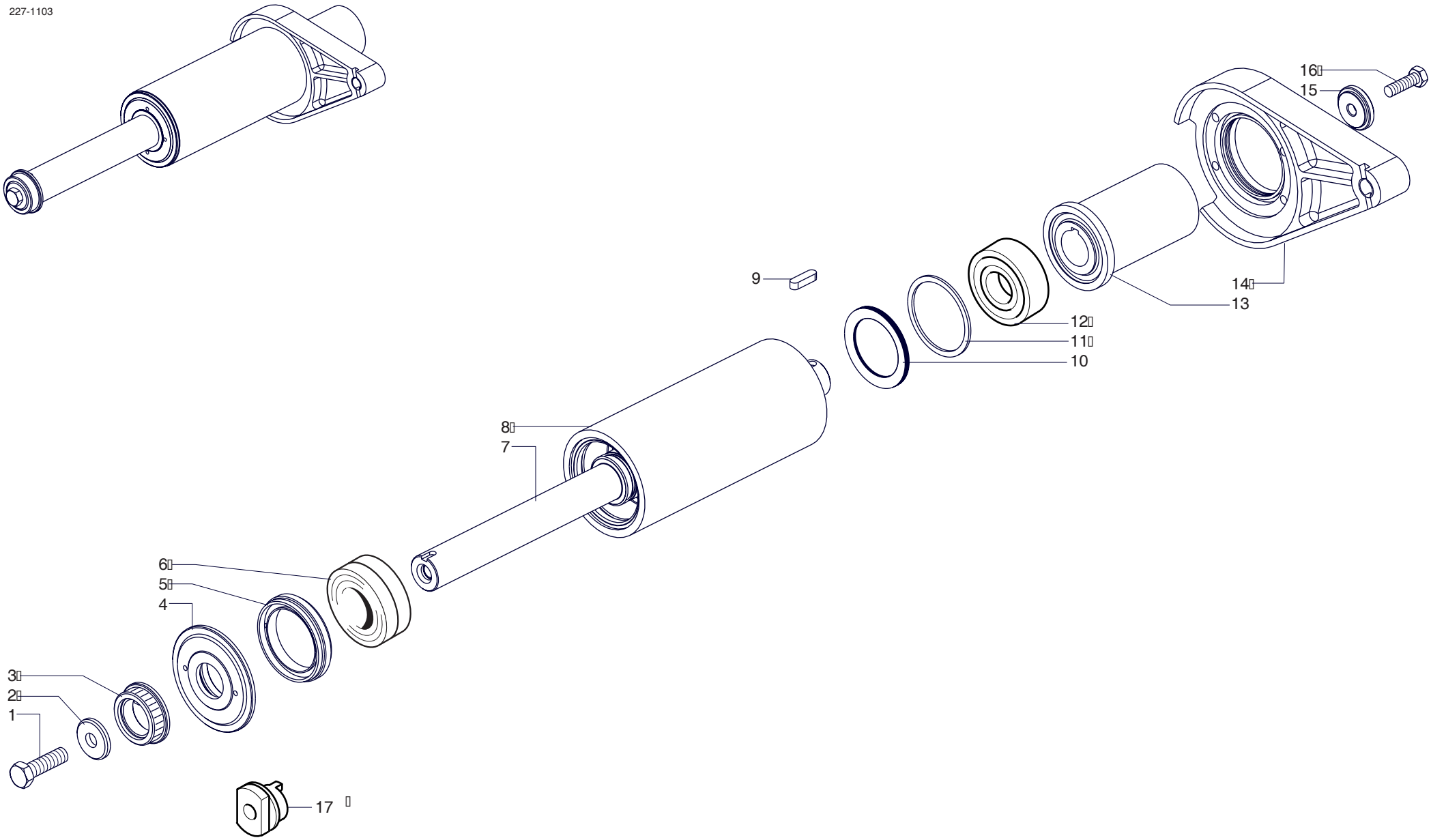


| | | | |
|---|---|---|---|
| scm | SUPERSET XL | ALBERO PIALLA - (01.01.1901 -> - p.20,06,2007)<br>CUTTERBLOCK - ARBRE PORTE-COUTEAUX<br>MESSERWELLE - EJE CEPILLO | 227-1403-0 |

| N | P | C | CODICE | Q.TY | DENOMINAZIONE | DESCRIPTION | DESIGNATION | BEZEICHNUNG | DENOMINACION |
|---|---|---|---|---|---|---|---|---|---|
| | 01.01.1901 -> 01.01.3000 | | | | Note: 2822730830B | | | | |
| | 1 | | 0539034703G | 1.00 | TIRANTE A VITE | STAY BOLT | TIRANT | SUGSTANGE | TIRANTE |
| | 2 | | 0325436700C | 1.00 | MOLLA | SPRING | RESSORT | FEDER | RESORTE |
| | 3 | | 0322730619B | 1.00 | OCCHIELLO | EYELET | OEILLET | OESE | OJAL |
| | 4 | | 0322730618L | 1.00 | FULCRO | BUSH | DOUILLE | BUCHSE | FULCRO |
| | 5 | | 0321940815L | 2.00 | ANELLO | RING | BAGUE | RING | ANILLO |
| | 6 | | 0522730617B | 1.00 | BANDIERA MOTORE | SUPPORT | SUPPORT | MOTOR WIPPE | BANDERA |
| | 6 | | 0522730633E | 1.00 | BANDIERA | SUPPORT | SUPPORT PIVOTANT | WIPPE | BANDERA |
| | 7 | | 0000604041G | 1.00 | CINGHIA PIATTA | FLAT BELT | COURROIE PLATE | FLACHRIEMEN | CORREA PLANA |
| | 7 | | 0000604053C | 1.00 | CINGHIA | BELT | COURROIE | RIEMEN | CORREA |
| | 7 | | 0000604151A | 1.00 | CINGHIA | BELT | COURROIE | RIEMEN | CORREA |
| | 7 | | 0000604152C | 1.00 | CINGHIA PIATTA | FLAT BELT | COURROIE PLATE | FLACHRIEMEN | CORREA PLANA |
| | 7 | | 0000605369E | 1.00 | CINGHIA PIATTA | FLAT BELT | COURROIE PLATE | FLACHRIEMEN | CORREA PLANA |
| | 7 | | 0000605370F | 1.00 | CINGHIA PIATTA | FLAT BELT | COURROIE PLATE | FLACHRIEMEN | CORREA PLANA |
| | 7 | | 0000605371H | 1.00 | CINGHIA PIATTA | FLAT BELT | COURROIE PLATE | FLACHRIEMEN | CORREA PLANA |
| | 7 | | 0000605372A | 1.00 | CINGHIA PIATTA | FLAT BELT | COURROIE PLATE | FLACHRIEMEN | CORREA PLANA |
| | 8 | | 0322730172B | 1.00 | PULEGGIA | PULLEY | POULIE | RIEMENSCHEIBE | POLEA |
| | 8 | | 0322730173D | 1.00 | PULEGGIA | PULLEY | POULIE | RIEMENSCHEIBE | POLEA |
| | 8 | | 0322730174F | 1.00 | PULEGGIA | PULLEY | POULIE | RIEMENSCHEIBE | POLEA |
| | 8 | | 0322730175H | 1.00 | PULEGGIA | PULLEY | POULIE | RIEMENSCHEIBE | POLEA |
| | 8 | | 0322730176A | 1.00 | PULEGGIA | PULLEY | POULIE | RIEMENSCHEIBE | POLEA |
| | 8 | | 0322730177C | 1.00 | PULEGGIA | PULLEY | POULIE | RIEMENSCHEIBE | POLEA |
| | 8 | | 0322730178E | 1.00 | PULEGGIA | PULLEY | POULIE | RIEMENSCHEIBE | POLEA |
| | 8 | | 0322730179G | 1.00 | PULEGGIA | PULLEY | POULIE | RIEMENSCHEIBE | POLEA |
| | 9 | | 0001314108B | 1.00 | MOTORE TRIF. | 3-PH. MOTOR | 3-PH. MOTEUR | 3-PH. MOTOR | MOT.TRIFAS. |
| | 9 | | 0001314139G | 1.00 | MOTORE TRIF. | 3.PH MOTOR | 3 PH. MOTEUR | 3-PH MOTOR | MOT. TRIFAS |
| | 9 | | 0001314165B | 1.00 | MOTORE TRIF. | 3.PH MOTOR | 3 PH. MOTEUR | 3-PH MOTOR | MOT. TRIFAS |
| | 9 | | 0001314190D | 1.00 | MOTORE TRIF. | 3.PH MOTOR | 3 PH. MOTEUR | 3-DREIPHASENMOTOR | MOT. TRIFAS |
| | 9 | | 0001314551A | 1.00 | MOTORE TRIF. | 3-PH. MOTOR | 3-PH. MOTEUR | 3-PH. MOTOR | MOT.TRIFAS. |
| | 9 | | 0001315066C | 1.00 | MOTORE TRIF. | 3-PH. MOTOR | 3-PH. MOTEUR | 3-PH. MOTOR | MOT.TRIFAS. |
| | 9 | | 0001315093L | 1.00 | MOTORE TRIF. | 3-PH. MOTOR | 3-PH. MOTEUR | 3-PH. MOTOR | MOT.TRIFAS. |
| | 9 | | 0001315102L | 1.00 | MOTORE TRIF. | 3.PH MOTOR | 3 PH. MOTEUR | 3-PH MOTOR | MOT. TRIFAS |
| | 9 | | 0001315105F | 1.00 | MOTORE TRIF. | 3.PH MOTOR | 3 PH. MOTEUR | 3-PH MOTOR | MOT. TRIFAS |
| | 9 | | 0001315115G | 1.00 | MOTORE TRIF. | 3.PH MOTOR | 3 PH. MOTEUR | 3-DREIPHASENMOTOR | MOT. TRIFAS |
| | 9 | | 0001315118D | 1.00 | MOTORE TRIF. | 3.PH MOTOR | 3 PH. MOTEUR | 3-PH MOTOR | MOT. TRIFAS |
| | 9 | | 0001315132C | 1.00 | MOTORE TRIF. | 3.PH. MOTOR | 3 PH. MOTEUR | 3-DREIPHASENMOTOR | MOT. TRIFAS |
| | 9 | | 0001315135L | 1.00 | MOTORE TRIF. | 3.PH MOTOR | 3 PH. MOTEUR | 3-PH MOTOR | MOT. TRIFAS |
| | 9 | | 0001315152E | 1.00 | MOTORE TRIF. | 3.PH MOTOR | 3 PH. MOTEUR | 3-DREIPHASENMOTOR | MOT. TRIFAS |
| | 9 | | 0001315154L | 1.00 | MOTORE TRIF. | 3.PH MOTOR | 3 PH. MOTEUR | 3-DREIPHASENMOTOR | MOT. TRIFAS |
| | 9 | | 0001315156D | 1.00 | MOTORE TRIF. | 3-PH. MOTOR | 3-PH. MOTEUR | 3-PH. MOTOR | MOT.TRIFAS. |

| N | P | C | CODICE | Q.TY | DENOMINAZIONE | DESCRIPTION | DESIGNATION | BEZEICHNUNG | DENOMINACION |
|---|---|---|---|---|---|---|---|---|---|
| | 9 | | 0001315197A | 1.00 | MOTORE TRIF. | 3.PH MOTOR | 3 PH. MOTEUR | 3-PH MOTOR | MOT. TRIFAS |
| | 9 | | 0001315222D | 1.00 | MOTORE TRIF. | 3.PH MOTOR | 3 PH. MOTEUR | 3-PH MOTOR | MOT. TRIFAS |
| | 9 | | 0001315232E | 1.00 | MOTORE TRIF. | 3-PH. MOTOR | 3-PH. MOTEUR | 3-PH. MOTOR | MOT.TRIFAS. |
| | 9 | | 0001315234L | 1.00 | MOTORE TRIF. | 3-PH. MOTOR | 3-PH. MOTEUR | 3-PH. MOTOR | MOT.TRIFAS. |
| | 9 | | 0001315235B | 1.00 | MOTORE TRIF. | 3-PH. MOTOR | 3-PH. MOTEUR | 3-PH. MOTOR | MOT.TRIFAS. |
| | 9 | | 0001315236D | 1.00 | MOTORE TRIF. | 3-PH. MOTOR | 3-PH. MOTEUR | 3-PH. MOTOR | MOT.TRIFAS. |
| | 9 | | 0001331084A | 1.00 | MOTORE TRIF. FRENO C.C. | 3-PH. MOTOR D.C. BRAKE | MOTEUR 3-PH . FREIN C.C | 3-PH. MOTOR G.S. BREMSE | MOT. TRIFAS. FR. C.C. |
| | 9 | | 0001331089B | 1.00 | MOTORE TRIF. FRENO C.C. | 3-PH. MOTOR C.C. BRAKE | 3-PH. MOTEUR FREIN C.C. | 3-PH. MOTOR C.C. BREMSE | MOT.TRIFAS.FR.C.C. |
| | 9 | | 0001331094B | 1.00 | MOTORE TRIF. FRENO C.C. | 3-PH. MOTOR C.C. BRAKE | 3-PH. MOTEUR FREIN C.C. | 3-PH. MOTOR C.C. BREMSE | MOT.TRIFAS.FR.C.C. |
| | 9 | | 0001331095D | 1.00 | MOTORE TRIF. FRENO C.C. | 3-PH. MOTOR C.C. BRAKE | 3-PH. MOTEUR FREIN C.C. | 3-PH. MOTOR C.C. BREMSE | MOT.TRIFAS.FR.C.C. |
| | 9 | | 0001331096F | 1.00 | MOTORE TRIF. FRENO C.C. | 3-PH. MOTOR C.C. BRAKE | 3-PH. MOTEUR FREIN C.C. | 3-PH. MOTOR C.C. BREMSE | MOT.TRIFAS.FR.C.C. |
| | 9 | | 0001331097H | 1.00 | MOTORE TRIF. FRENO C.C. | 3-PH. MOTOR C.C. BRAKE | 3-PH. MOTEUR FREIN C.C. | 3-PH. MOTOR C.C. BREMSE | MOT.TRIFAS.FR.C.C. |
| | 9 | | 0001331098A | 1.00 | MOTORE TRIF. FRENO C.C. | 3-PH. MOTOR C.C. BRAKE | 3-PH. MOTEUR FREIN C.C. | 3-PH. MOTOR C.C. BREMSE | MOT.TRIFAS.FR.C.C. |
| | 9 | | 0001331099C | 1.00 | MOTORE TRIF. FRENO C.C. | 3-PH. MOTOR C.C. BRAKE | 3-PH. MOTEUR FREIN C.C. | 3-PH. MOTOR C.C. BREMSE | MOT.TRIFAS.FR.C.C. |
| | 9 | | 0001331101G | 1.00 | MOTORE TRIF. FRENO C.C. | 3-PH. MOTOR C.C. BRAKE | 3-PH. MOTEUR FREIN C.C. | 3-PH. MOTOR C.C. BREMSE | MOT.TRIFAS.FR.C.C. |
| | 9 | | 0001331109E | 1.00 | MOTORE TRIF. FRENO C.C. | 3-PH. MOTOR C.C. BRAKE | 3-PH. MOTEUR FREIN C.C. | 3-PH. MOTOR C.C. BREMSE | MOT.TRIFAS.FR.C.C. |
| | 9 | | 0001331113C | 1.00 | MOTORE TRIF. FRENO C.C. | 3-PH. MOTOR C.C. BRAKE | 3-PH. MOTEUR FREIN C.C. | 3-PH. MOTOR C.C. BREMSE | MOT.TRIFAS.FR.C.C. |
| | 9 | | 0001331166E | 1.00 | MOTORE TRIF. FRENO C.C. | 3-PH. MOTOR D.C. BRAKE | MOTEUR 3-PH . FREIN C.C | 3-PH. MOTOR G.S. BREMSE | MOT. TRIFAS. FR. C.C. |
| | 9 | | 0001331174B | 1.00 | MOTORE TRIF. FRENO C.C. | 3-PH. MOTOR D.C. BRAKE | 3-PH. MOTEUR FREIN C.C. | 3-PH. MOTOR G.S. BREMSE | MOT.TRIFAS.FR.C.C. |
| | 9 | | 0001331177H | 1.00 | MOTORE TRIF. FRENO C.C. | 3-PH. MOTOR D.C. BRAKE | MOTEUR 3-PH . FREIN C.C | 3-PH. MOTOR G.S. BREMSE | MOT. TRIFAS. FR. C.C. |
| | 9 | | 0001331178A | 1.00 | MOTORE TRIF. FRENO C.C. | 3-PH. MOTOR D.C. BRAKE | MOTEUR 3-PH . FREIN C.C | 3-PH. MOTOR G.S. BREMSE | MOT. TRIFAS. FR. C.C. |
| | 9 | | 0001331179C | 1.00 | MOTORE TRIF. FRENO C.C. | 3-PH. MOTOR D.C. BRAKE | MOTEUR 3-PH . FREIN C.C | 3-PH. MOTOR G.S. BREMSE | MOT. TRIFAS. FR. C.C. |
| | 9 | | 0001331200G | 1.00 | MOTORE TRIF. FRENO C.C. | 3-PH. MOTOR D.C. BRAKE | MOTEUR 3-PH . FREIN C.C | 3-PH. MOTOR G.S. BREMSE | MOT. TRIFAS. FR. C.C. |
| | 9 | | 0001331250C | 1.00 | MOTORE TRIF. FRENO C.C. | 3-PH. MOTOR D.C. BRAKE | MOTEUR 3-PH . FREIN C.C | 3-PH. MOTOR G.S. BREMSE | MOT. TRIFAS. FR. C.C. |
| | 9 | | 0001331253L | 1.00 | MOTORE TRIF. FRENO C.C. | 3-PH. MOTOR D.C. BRAKE | MOTEUR 3-PH . FREIN C.C | 3-PH. MOTOR G.S. BREMSE | MOT. TRIFAS. FR. C.C. |
| | 9 | | 0001331254B | 1.00 | MOTORE TRIF. FRENO C.C. | 3-PH. MOTOR D.C. BRAKE | MOTEUR 3-PH . FREIN C.C | 3-PH. MOTOR G.S. BREMSE | MOT. TRIFAS. FR. C.C. |
| | 9 | | 0001331255D | 1.00 | MOTORE TRIF. FRENO C.C. | 3-PH. MOTOR D.C. BRAKE | MOTEUR 3-PH . FREIN C.C | 3-PH. MOTOR G.S. BREMSE | MOT. TRIFAS. FR. C.C. |
| | 9 | | 0001331256F | 1.00 | MOTORE TRIF. FRENO C.C. | 3-PH. MOTOR D.C. BRAKE | MOTEUR 3-PH . FREIN C.C | 3-PH. MOTOR G.S. BREMSE | MOT. TRIFAS. FR. C.C. |
| | 9 | | 0001331270E | 1.00 | MOTORE TRIF. FRENO C.C. | 3-PH. MOTOR D.C. BRAKE | 3-PH. MOTEUR FREIN C.C. | 3-PH. MOTOR G.S. BREMSE | MOT.TRIFAS.FR.C.C. |
| | 9 | | 0001331273B | 1.00 | MOTORE TRIF. FRENO C.C. | 3-PH. MOTOR D.C. BRAKE | MOTEUR 3-PH . FREIN C.C | 3-PH. MOTOR G.S. BREMSE | MOT. TRIFAS. FR. C.C. |
| | 9 | | 0001331274D | 1.00 | MOTORE TRIF. FRENO C.C. | 3-PH. MOTOR D.C. BRAKE | MOTEUR 3-PH . FREIN C.C | 3-PH. MOTOR G.S. BREMSE | MOT. TRIFAS. FR. C.C. |
| | 9 | | 0001331275F | 1.00 | MOTORE TRIF. FRENO C.C. | 3-PH. MOTOR D.C. BRAKE | 3-PH. MOTEUR FREIN C.C. | 3-PH. MOTOR G.S. BREMSE | MOT.TRIFAS.FR.C.C. |
| | 9 | | 0001331276H | 1.00 | MOTORE TRIF. FRENO C.C. | 3-PH. MOTOR D.C. BRAKE | MOTEUR 3-PH . FREIN C.C | 3-PH. MOTOR G.S. BREMSE | MOT. TRIFAS. FR. C.C. |
| | 9 | | 0001334185H | 1.00 | MOTORE TRIF. | 3.PH. MOTOR | 3 PH. MOTEUR | 3-DREIPHASENMOTOR | MOT. TRIFAS |
| | 9 | | 0001334198F | 1.00 | MOTORE TRIF. | 3.PH MOTOR | 3 PH. MOTEUR | 3-DREIPHASENMOTOR | MOT. TRIFAS |
| | 9 | | 0001337516E | 1.00 | MOTORE TRIF. | 3-PH. MOTOR | 3-PH. MOTEUR | 3-PH. MOTOR | MOT.TRIFAS. |
| | 9 | | 0001338930D | 1.00 | MOTORE TRIF. | 3.PH MOTOR | 3 PH. MOTEUR | 3-DREIPHASENMOTOR | MOT. TRIFAS |
| | 9 | | 0001338959F | 1.00 | MOTORE TRIF. FRENO C.C. | 3-PH. MOTOR C.C. BRAKE | 3-PH. MOTEUR FREIN C.C. | 3-PH. MOTOR C.C. BREMSE | MOT.TRIFAS.FR.C.C. |
| | 9 | | 0001338960G | 1.00 | MOTORE TRIF. FRENO C.C. | 3-PH. MOTOR C.C. BRAKE | 3-PH. MOTEUR FREIN C.C. | 3-PH. MOTOR C.C. BREMSE | MOT.TRIFAS.FR.C.C. |
| | 9 | | 0001338961L | 1.00 | MOTORE TRIF. FRENO C.C. | 3-PH. MOTOR C.C. BRAKE | 3-PH. MOTEUR FREIN C.C. | 3-PH. MOTOR C.C. BREMSE | MOT.TRIFAS.FR.C.C. |

| N | P | C | CODICE | Q.TY | DENOMINAZIONE | DESCRIPTION | DESIGNATION | BEZEICHNUNG | DENOMINACION |
|---|---|---|---|---|---|---|---|---|---|
| | 9 | | 0001338965H | 1.00 | MOTORE TRIF. FRENO C.C. | 3-PH. MOTOR C.C. BRAKE | 3-PH. MOTEUR FREIN C.C. | 3-PH. MOTOR C.C. BREMSE | MOT.TRIFAS.FR.C.C. |
| | 9 | | 0001338987E | 1.00 | MOTORE TRIF. | 3-PH. MOTOR | 3-PH. MOTEUR | 3-PH. MOTOR | MOT.TRIFAS. |
| | 9 | | 0001338988G | 1.00 | MOTORE TRIF. | 3-PH. MOTOR | 3-PH. MOTEUR | 3-PH. MOTOR | MOT.TRIFAS. |
| | 9 | | 0001338994L | 1.00 | MOTORE TRIF. | 3.PH MOTOR | 3 PH. MOTEUR | 3-DREIPHASENMOTOR | MOT. TRIFAS |
| | 9 | | 0001338996D | 1.00 | MOTORE TRIF. FRENO C.C. | 3-PH. MOTOR D.C. BRAKE | MOTEUR 3-PH . FREIN C.C | 3-PH. MOTOR G.S. BREMSE | MOT. TRIFAS. FR. C.C. |
| | 9 | | 0001338997F | 1.00 | MOTORE TRIF. FRENO C.C. | 3-PH. MOTOR D.C. BRAKE | MOTEUR 3-PH . FREIN C.C | 3-PH. MOTOR G.S. BREMSE | MOT. TRIFAS. FR. C.C. |
| | 9 | | 0001338998H | 1.00 | MOTORE TRIF. | 3-PH. MOTOR | 3-PH. MOTEUR | 3-PH. MOTOR | MOT.TRIFAS. |
| | 9 | | 0001339195E | 1.00 | MOTORE TRIF. | 3-PH. MOTOR | 3-PH. MOTEUR | 3-PH. MOTOR | MOT.TRIFAS. |
| | 9 | | 0001339788D | 1.00 | MOTORE TRIF. | 3-PH. MOTOR | 3-PH. MOTEUR | 3-PH. MOTOR | MOT.TRIFAS. |
| | 9 | | 0001339789F | 1.00 | MOTORE TRIF. FRENO C.C. | 3-PH. MOTOR C.C. BRAKE | 3-PH. MOTEUR FREIN C.C. | 3-PH. MOTOR C.C. BREMSE | MOT.TRIFAS.FR.C.C. |
| | 9 | | 0001339790G | 1.00 | MOTORE TRIF. FRENO C.C. | 3-PH. MOTOR C.C. BRAKE | 3-PH. MOTEUR FREIN C.C. | 3-PH. MOTOR C.C. BREMSE | MOT.TRIFAS.FR.C.C. |
| | 9 | | 0001339791L | 1.00 | MOTORE TRIF. | 3-PH. MOTOR | 3-PH. MOTEUR | 3-PH. MOTOR | MOT.TRIFAS. |
| | 10 | | 0000310246G | 1.00 | VITE | SCREW | VIS | SCHRAUBE | TORNILLO |
| | 10 | | 0000310363E | 1.00 | VITE | SCREW | VIS | SCHRAUBE | TORNILLO |
| | 11 | | 0000305249G | 1.00 | RONDELLA | WASHER | RONDELLE | SCHEIBE | ARANDELA |
| | 11 | | 0319431135F | 1.00 | RONDELLA | WASHER | RONDELLE | SCHEIBE | ARANDELA |
| | 12 | | 0000601020L | 1.00 | BOCCOLA AUTOL. | SELF-LUBRICATING BUSH | DOUILLE AUTOLUBRIFIANTE | SELBSTSCHMIER. BUCHSE | ANILL.AUTOLUB. |

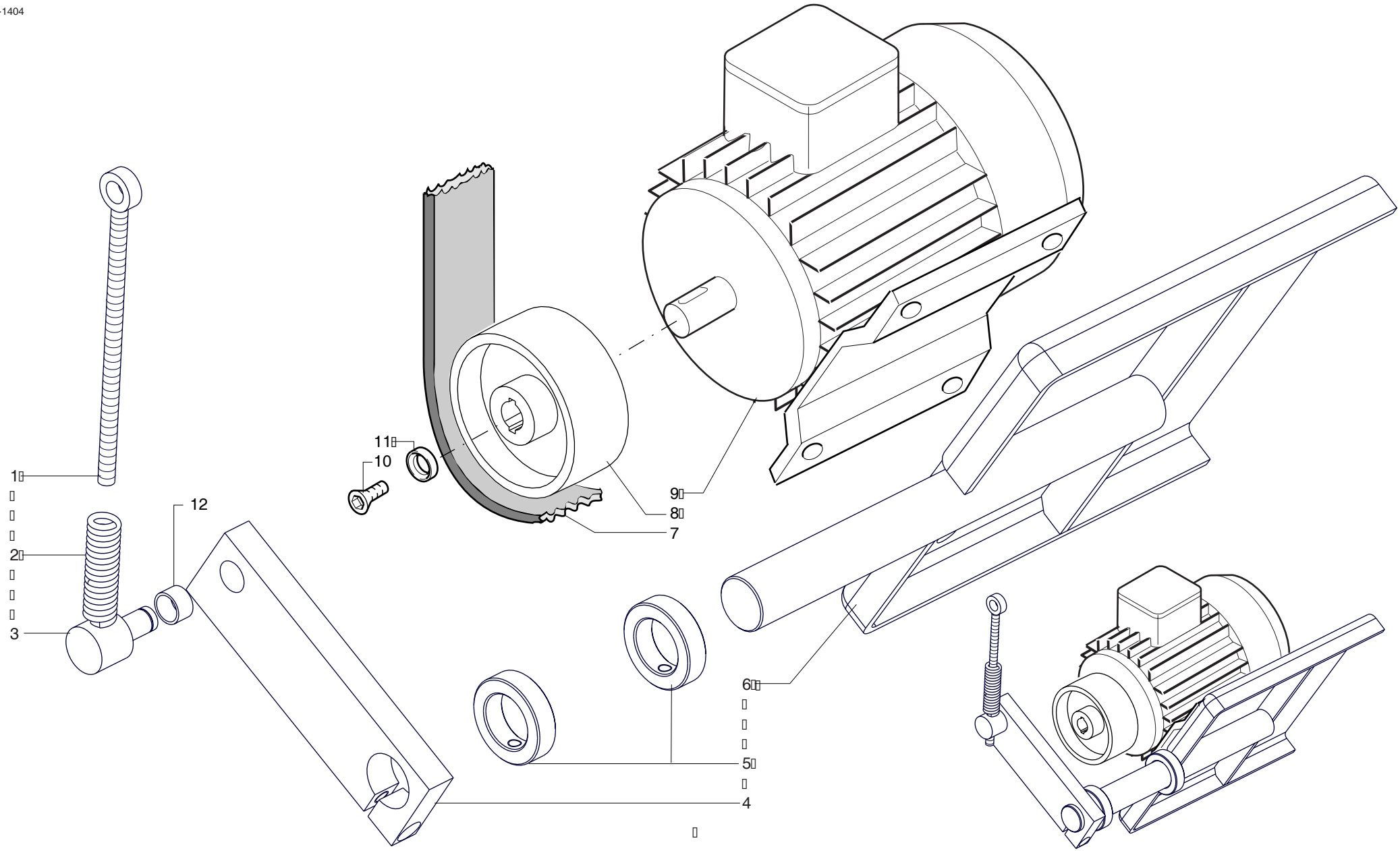


scm

**SUPERSET XL**

**MOTORIZZAZIONE - (01.01.1901 -> - p.20,06,2007)**
**MOTORIZATION - MOTORISATION**
**MOTORISIERUNG - MOTORIZACION**

**227-1404-0**

| scm | SUPERSET XL | POSIZIONAMENTO VERTICALE MANUALE - (p.20,06,2007)<br>MANUAL VERTICAL ADJUSTMENT - REGLAGE VERTICAL MANUEL<br>MANUELLE VERTIKALVERSTELLUNG - UBICACION VERTICAL MANUAL | 227-1405-0 |
|---|---|---|---|

| N | P | C | CODICE | Q.TY | DENOMINAZIONE | DESCRIPTION | DESIGNATION | BEZEICHNUNG | DENOMINACION |
|---|---|---|---|---|---|---|---|---|---|
| | 01.01.1901 -> 01.01.3000 | | | | Note: 2822730581C | | | | |
| | 1 | | 0000635055E | 1.00 | INDICATORE NUMERICO | INDICATOR | INDICATEUR | ANZEIGER | INDICADOR NUMERICO |
| | 1 | | 0000635143B | 1.00 | INDICATORE NUMERICO | INDICATOR | INDICATEUR | ANZEIGER | INDICADOR NUMERICO |
| | 2 | | 0522730170B | 1.00 | FLANGIA | FLANGE | FLASQUE | FLANSCH | BRIDA |
| | 3 | | 0000613041H | 2.00 | GABBIA A RULLINI | ROLLER CAGE | CAGE A ROULEAUX | WALZENKAEFIG | COJINETE |
| | 4 | | 0316330020C | 1.00 | RONDELLA | WASHER | RONDELLE | SCHEIBE | ARANDELA |
| | 5 | | 0000613045G | 4.00 | RALLA | WASHER | CRAPAUDINE | SCHEIBE | RANGUA |
| | 6 | | 0322730171L | 1.00 | BOCCOLA | BUSHING | DOUILLE | BUCHSE | CASQUILLO |
| | 7 | | 0322730711F | 1.00 | VITE | SCREW | VIS | SCHRAUBE | TORNILLO |
| | 8 | | 0322775005C | 1.00 | TARGA | PLATE | PLAQUE | SCHILD | TARJETA |
| | 9 | | 0319430912D | 1.00 | BOCCOLA | BUSHING | DOUILLE | BUCHSE | CASQUILLO |
| | 10 | | 0319430901A | 1.00 | SCATOLA DI RINVIO | TRANSFER CASE | BOITE | VORGELEGEKASTEN | CAJA |
| | 11 | | 0000305230F | 1.00 | ROSETTA | WASHER | RONDELLE | SCHEIBE | ARANDELA |
| | 12 | | 0000613034D | 4.00 | RALLA | WASHER | CRAPAUDINE | SCHEIBE | RANGUA |
| | 13 | | 0000613033B | 2.00 | GABBIA A RULLINI | ROLLER CAGE | CAGE A ROULEAUX | WALZENKAEFIG | COJINETE |
| | 14 | | 0319430904G | 1.00 | CORONA DENTATA | GEAR WHEEL | COURONNE DENTEE | ZAHNRAD | RUEDA DENTADA |
| | 15 | | 0322730615C | 1.00 | VITE | SCREW | VIS | SCHRAUBE | TORNILLO |
| | 16 | | 0000645045F | 1.00 | LINGUETTA | FEATHER KEY | LANGUETTE | FEDERKEIL | LINGUETA |
| | 17 | | 0719412601A | 1.00 | MANIGLIA | HANDLE | POIGNEE | HANDGRIFF | MANIJA |
| | 18 | | 0000304246L | 1.00 | VITE | SCREW | VIS | SCHRAUBE | TORNILLO |
| | 19 | | 0319013512L | 1.00 | POMELLO | BALL GRIP | POIGNEE | KUGELGRIFF | POMO |

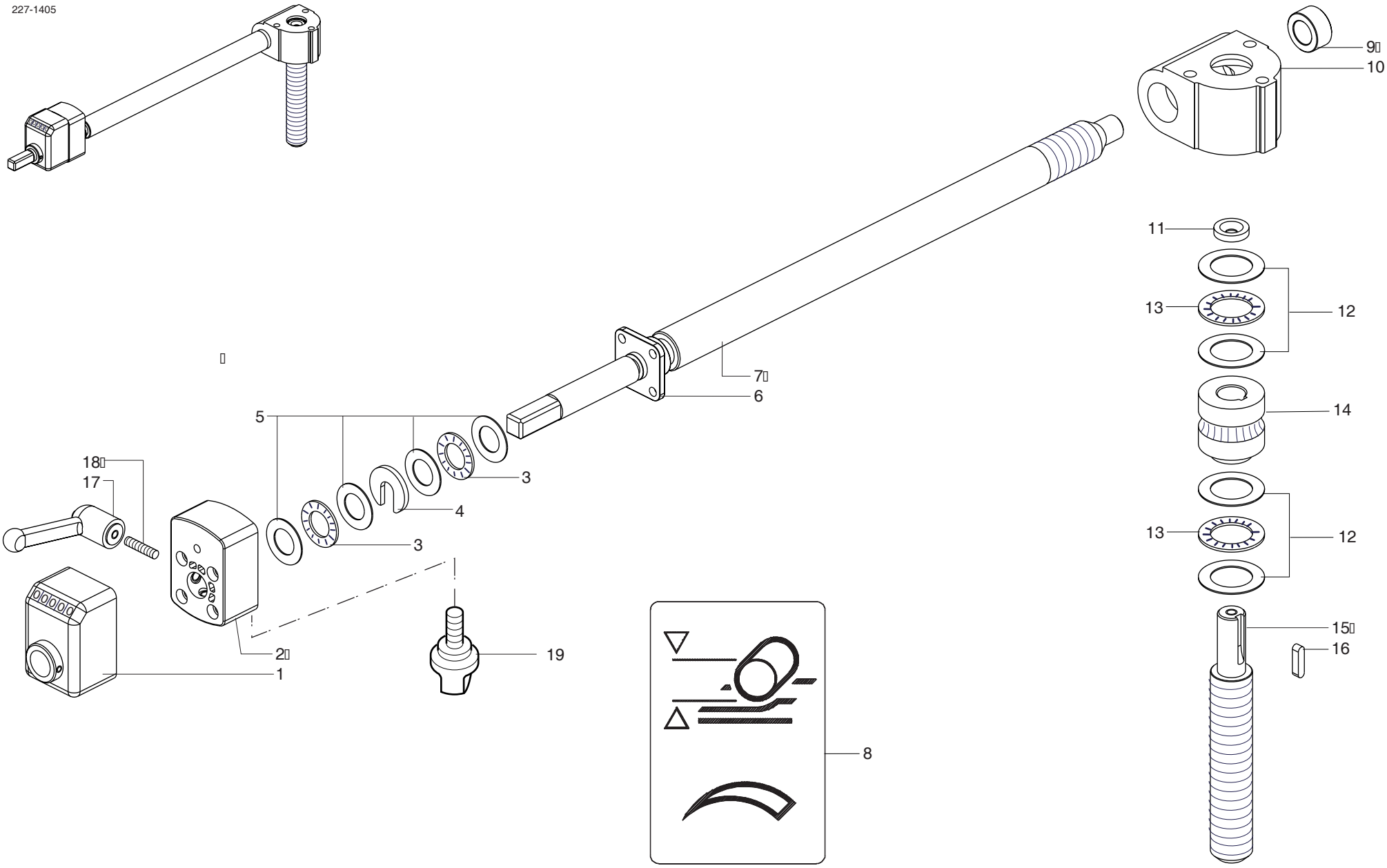


| scm | SUPERSET XL | POSIZIONAMENTO VERTICALE MANUALE - (01.01.1901 ->  - p.20,06,2007)<br>MANUAL VERTICAL ADJUSTMENT - REGLAGE VERTICAL MANUEL<br>MANUELLE VERTIKALVERSTELLUNG - UBICACION VERTICAL MANUAL | 227-1405-0 |
|---|---|---|---|

| N | P | C | CODICE | Q.TY | DENOMINAZIONE | DESCRIPTION | DESIGNATION | BEZEICHNUNG | DENOMINACION |
|---|---|---|---|---|---|---|---|---|---|
| | 01.01.1901 -> 01.01.3000 | | | | Note: 2822730591D | | | | |
| | 1 | | 0000635039B | 1.00 | INDICATORE NUMERICO | INDICATOR | INDICATEUR | ANZEIGER | INDICADOR |
| | 1 | | 0000635139D | 1.00 | INDICATORE NUMERICO | INDICATOR | INDICATEUR | ANZEIGER | INDICADOR NUMERICO |
| | 2 | | 0522730170B | 1.00 | FLANGIA | FLANGE | FLASQUE | FLANSCH | BRIDA |
| | 3 | | 0000613041H | 2.00 | GABBIA A RULLINI | ROLLER CAGE | CAGE A ROULEAUX | WALZENKAEFIG | COJINETE |
| | 4 | | 0316330020C | 1.00 | RONDELLA | WASHER | RONDELLE | SCHEIBE | ARANDELA |
| | 5 | | 0000613045G | 4.00 | RALLA | WASHER | CRAPAUDINE | SCHEIBE | RANGUA |
| | 6 | | 0322730625D | 1.00 | BARRA | BAR | BARRE | STANGE | BARRA |
| | 7 | | 0322730171L | 1.00 | BOCCOLA | BUSHING | DOUILLE | BUCHSE | CASQUILLO |
| | 8 | | 0722740133A | 1.00 | GIUNTO | JOINT | JOINT | KUPPLUNG | JUNTA |
| | 9 | | 0322775006E | 1.00 | TARGA | PLATE | PLAQUE | SCHILD | TARJETA |
| | 10 | | 0319013512L | 1.00 | POMELLO | BALL GRIP | POIGNEE | KUGELGRIFF | POMO |

227-1406

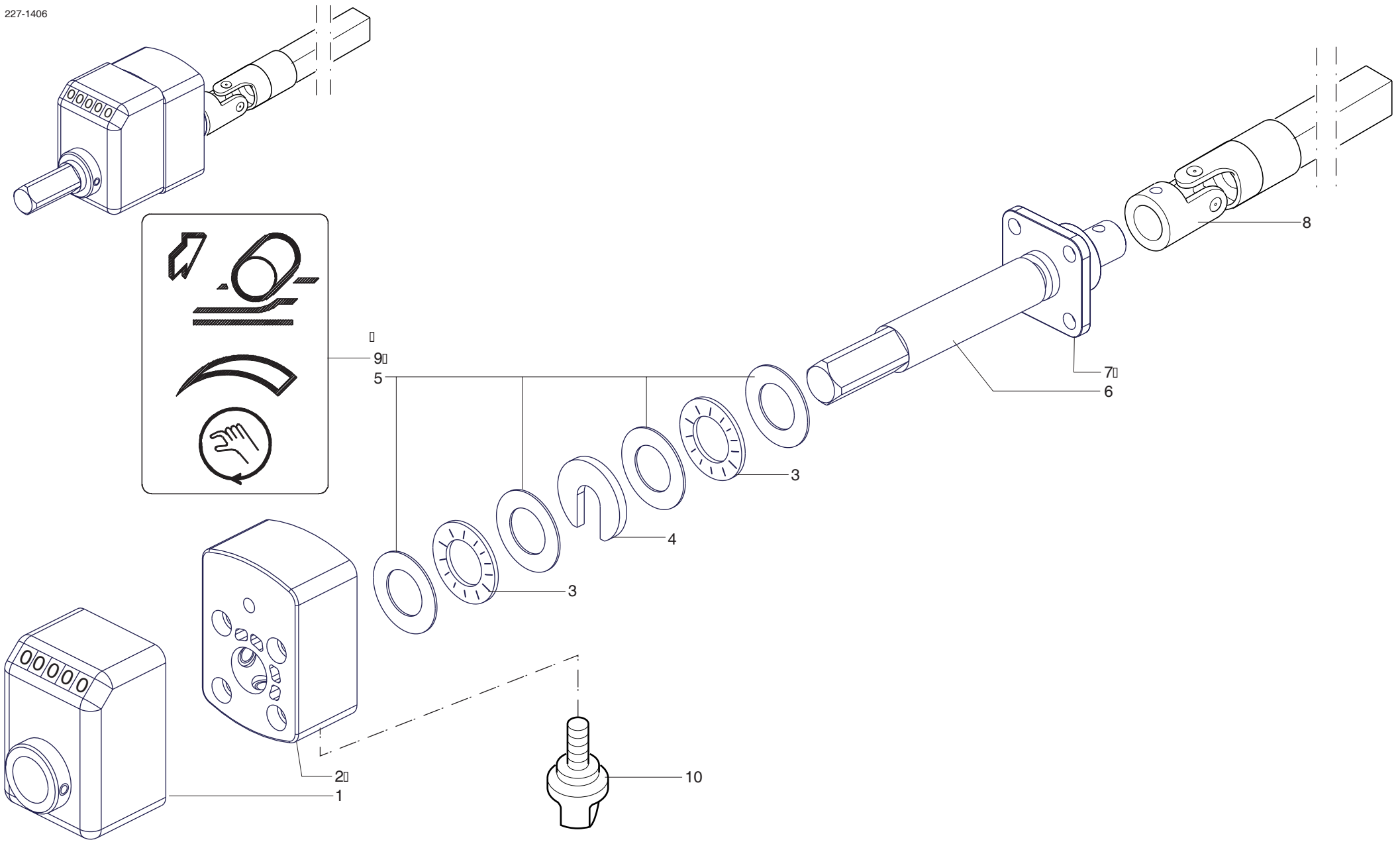


| | | | |
|---|---|---|---|
| scm | SUPERSET XL | POSIZIONAMENTO ORIZZONTALE MANUALE - (01.01.1901 -> - p.20,06,2007)<br>MANUAL HORIZONTAL ADJUSTMENT - REGLAGE HORIZONTAL MANUEL<br>MANUELLE HORIZONTALVERSTELLUNG - UBICACION HORIZONTAL MANUAL | 227-1406-0 |

| scm | SUPERSET XL | CUFFIA D'ASPIRAZIONE (O.S.) - (p.20,06,2007)<br>SUCTION HOOD (TOP HORIZ. SPINDLE) - HOTTE D'ASPIRATION (ARBRE HORIZ. SUP.)<br>ABSAUGHAUBE - CAMPANA DE ASPIRACION (H.S) | 227-1407-0 |
|---|---|---|---|

| N | P | C | CODICE | Q.TY | DENOMINAZIONE | DESCRIPTION | DESIGNATION | BEZEICHNUNG | DENOMINACION |
|---|---|---|---|---|---|---|---|---|---|
| | 01.01.1901 -> 01.01.3000 | | | | Note: 2822730570L | | | | |
| | 1 | | 0000619669H | 1.00 | MANIGLIA | HANDLE | POIGNEE | HANDGRIFF | MANIJA |
| | 2 | | 0322730600A | 1.00 | COPERCHIO | COVER | COUVERCLE | DECKEL | TAPA |
| | 2 | | 0322730653C | 1.00 | COPERCHIO | COVER | COUVERCLE | DECKEL | TAPA |
| | 3 | | 0322730629C | 1.00 | GOMMA | RUBBER | GOMME | GUMMI | GOMA |
| | 4 | | 0310130104F | 2.00 | PERNO | PIN | PIVOT | BOLZEN | PERNO |
| | 5 | | 0522730601G | 1.00 | CUFFIA | HOOD | HOTTE | HAUBE | CAMPANA |
| | 5 | | 0522730637D | 1.00 | CUFFIA | HOOD | HOTTE | HAUBE | CAMPANA |
| | 6 | | 0522730701L | 0.00 | CUFFIA | HOOD | HOTTE | HAUBE | CAMPANA |
| | 7 | | 0321910793E | 1.00 | TARGA | PLATE | PLAQUE | SCHILD | TARJETA |
| | 8 | | 0321910790H | 1.00 | TARGA | PLATE | PLAQUE | SCHILD | TARJETA |
| | 9 | | 0302110049H | 1.00 | TARGA | PLATE | PLAQUE | SCHILD | TARJETA |
| | 10 | | 0302110069A | 1.00 | TARGA | PLATE | PLAQUE | SCHILD | TARJETA |

227-1407

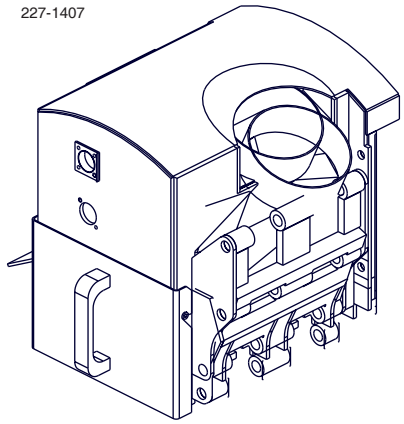



9

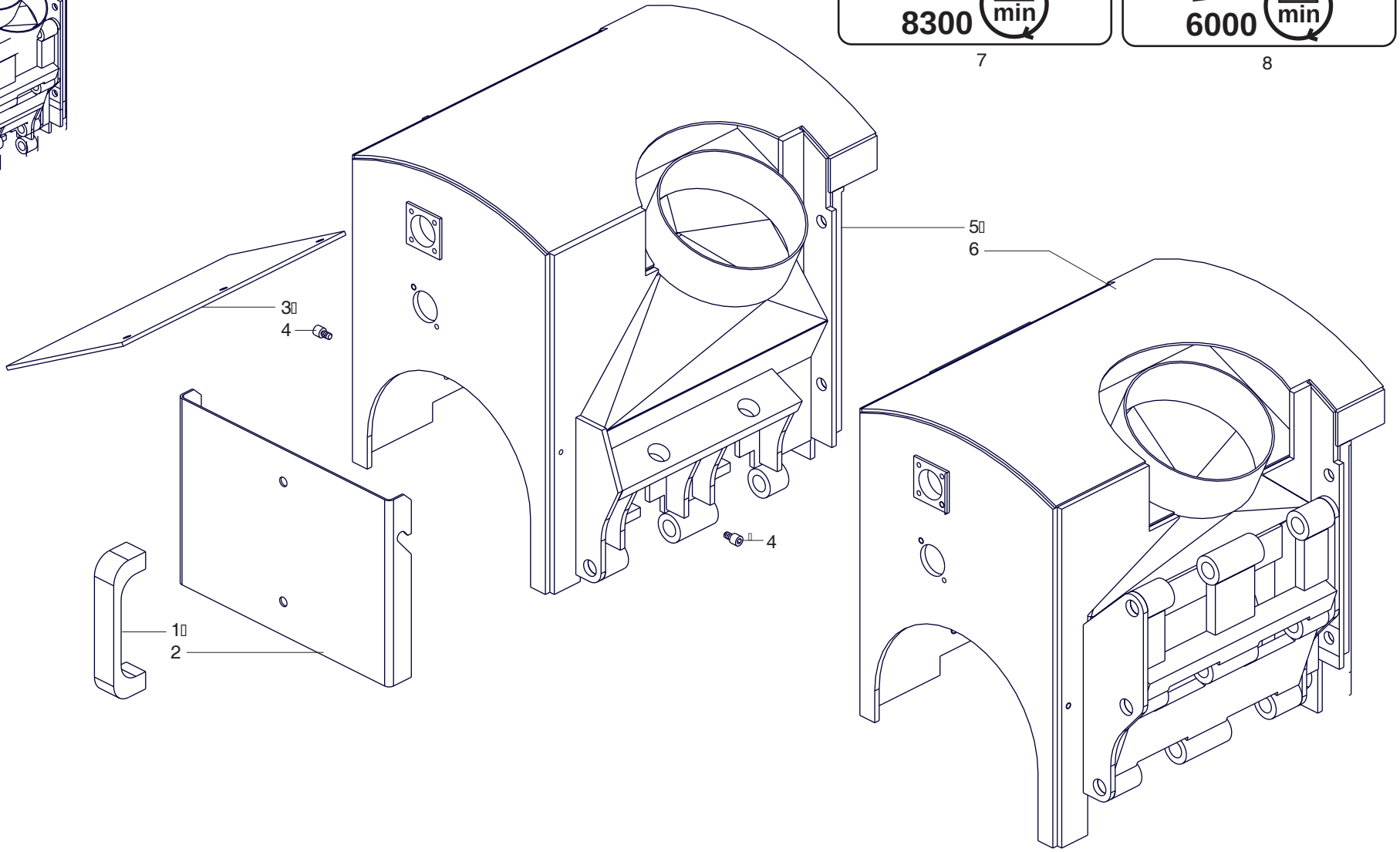





10

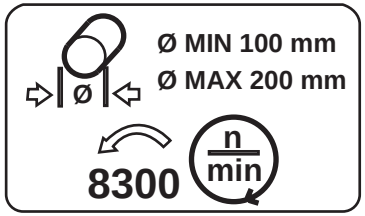


7

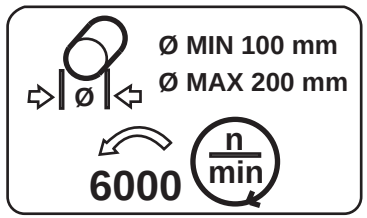


8

| | | | |
|---|---|---|---|
| scm | SUPERSET XL | CUFFIA D'ASPIRAZIONE (O.S.) - (01.01.1901 -> - p.20,06,2007)<br>SUCTION HOOD (TOP HORIZ. SPINDLE) - HOTTE D'ASPIRATION (ARBRE HORIZ. SUP.)<br>ABSAUGHAUBE - CAMPANA DE ASPIRACION (H.S) | 227-1407-0 |

| scm | SUPERSET XL | CUFFIA D'ASPIRAZIONE (O.S.) - (p.20,06,2007)<br>SUCTION HOOD (TOP HORIZ. SPINDLE) - HOTTE D'ASPIRATION (ARBRE HORIZ. SUP.)<br>ABSAUGHAUBE - CAMPANA DE ASPIRACION (H.S) | 227-1407-1 |
|---|---|---|---|

| N | P | C | CODICE | Q.TY | DENOMINAZIONE | DESCRIPTION | DESIGNATION | BEZEICHNUNG | DENOMINACION |
|---|---|---|---|---|---|---|---|---|---|
| | 01.01.1901 -> 01.01.3000 | | | | Note: ----- | | | | |
| 1 | | | 0522730716B | 1.00 | CUFFIA | HOOD | HOTTE | HAUBE | CAMPANA |
| 2 | | | 0322730723B | 1.00 | COPERCHIO | COVER | COUVERCLE | DECKEL | TAPA |
| 2 | | | 0322730738D | 1.00 | COPERCHIO | COVER | COUVERCLE | DECKEL | TAPA |
| 3 | | | 0322730629C | 1.00 | GOMMA | RUBBER | GOMME | GUMMI | GOMA |
| 4 | | | 0321910793E | 1.00 | TARGA | PLATE | PLAQUE | SCHILD | TARJETA |
| 5 | | | 0321910790H | 1.00 | TARGA | PLATE | PLAQUE | SCHILD | TARJETA |
| 6 | | | 0302110049H | 1.00 | TARGA | PLATE | PLAQUE | SCHILD | TARJETA |
| 7 | | | 0302110069A | 1.00 | TARGA | PLATE | PLAQUE | SCHILD | TARJETA |
| 8 | | | 0000619669H | 1.00 | MANIGLIA | HANDLE | POIGNEE | HANDGRIFF | MANIJA |
| 9 | | | 0322730727A | 2.00 | DISTANZIALE | SPACER | ENTRETOISE | DISTANZSTUECK | DISTANCIADOR |

22714071

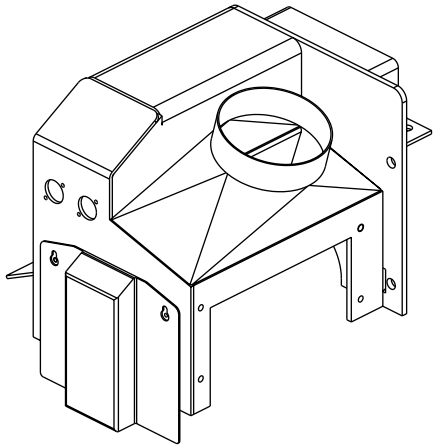

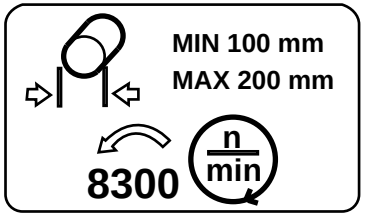


4

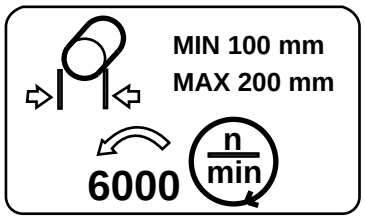


5



6




7

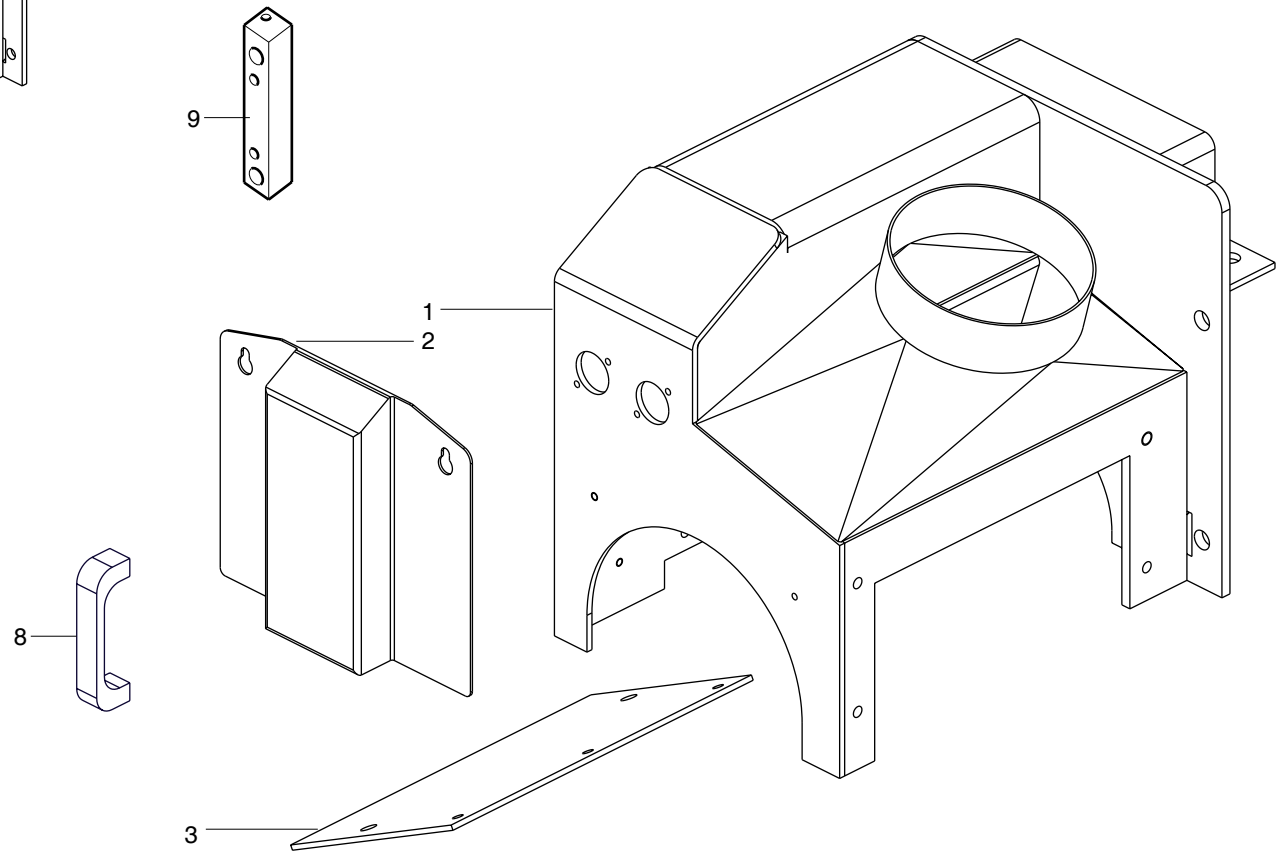


| | | | |
|---|---|---|---|
| scm | SUPERSET XL | CUFFIA D'ASPIRAZIONE (O.S.) - (01.01.1901 -> - p.20,06,2007)<br>SUCTION HOOD (TOP HORIZ. SPINDLE) - HOTTE D'ASPIRATION (ARBRE HORIZ. SUP.)<br>ABSAUGHAUBE - CAMPANA DE ASPIRACION (H.S) | 227-1407-1 |

| N | P | C | CODICE | Q.TY | DENOMINAZIONE | DESCRIPTION | DESIGNATION | BEZEICHNUNG | DENOMINACION |
|---|---|---|---|---|---|---|---|---|---|
| | 01.01.1901 -> 01.01.3000 | | | | Note: 2822730550G | | | | |
| | 1 | | 0319012600E | 1.00 | POMOLO | BALL GRIP | POIGNEE | KUGELGRIFF | POMO |
| | 2 | | 0322730608H | 1.00 | BARRA FILETTATA | THREADED BAR | BARRE | STANGE | BARRA |
| | 3 | | 0321960416G | 1.00 | MOLLA | SPRING | RESSORT | FEDER | RESORTE |
| | 4 | | 0322730604L | 1.00 | PIASTRA | PLATE | PLAQUE | PLATTE | PLANCHA |
| | 5 | | 0322730605B | 1.00 | LARDONE | GIB | CONTRE-FER | STELLEISTE | CHAVETA |
| | 6 | | 0000616033E | 2.00 | INGRASSATORE (NIPPLO) | GREASE NIPPLE | NIPPLE | SCHMIERNIPPEL | NIPLE ENGRASADOR |
| | 7 | | 0322730602E | 1.00 | SUPPORTO | SUPPORT | SUPPORT | STUETZE | SOPORTE |
| | 8 | | 0322730603G | 1.00 | PRESSATORE | PRESSER | PRESSEUR | DRUCKELEMENT | PRENSADOR |
| | 9 | | 0310130203F | 1.00 | LARDONE | GIB | CONTRE-FER | STELLEISTE | CHAVETA |
| | 10 | | 0311136419D | 1.00 | SCARPA PRESSATRICE | SHOE | SABOT | DRUCKSCHUH | PLANCHA PRENSORA |
| | 10 | | 0322730607F | 1.00 | SCARPA PRESSATORE | SHOE | SABOT | DRUCKSCHUH | PLANCHA PRENSORA |
| | 10 | | 0322730907C | 1.00 | SCARPA PRESSATRICE | SHOE | SABOT | DRUCKSCHUH | PLANCHA PRENSORA |
| | 10 | | 0322730908E | 1.00 | SCARPA PRESSATORE | SHOE | SABOT | DRUCKSCHUH | PLANCHA PRENSORA |
| | 11 | | 0522730632C | 1.00 | SCARPA PRESSATORE | SHOE | SABOT | DRUCKSCHUH | PLANCHA PRENSORA |
| | 12 | | 0316332636C | 1.00 | PASTIGLIA | PAD | PASTILLE | BELAG | PASTILLA |
| | 13 | | 0322732222A | 1.00 | SCARPA PRESSATORE | SHOE | SABOT | DRUCKSCHUH | PLANCHA PRENSORA |
| | 13 | | 0322732229F | 1.00 | SCARPA PRESSATRICE | SHOE | SABOT | DRUCKSCHUH | PLANCHA PRENSORA |
| | 14 | | 0521960607G | 1.00 | STAFFA | BRACKET | BRIDE | BUEGEL | ABRAZADERA |
| | 15 | | 0522730932L | 1.00 | SCARPA PRESSATORE | SHOE | SABOT | DRUCKSCHUH | PLANCHA PRENSORA |

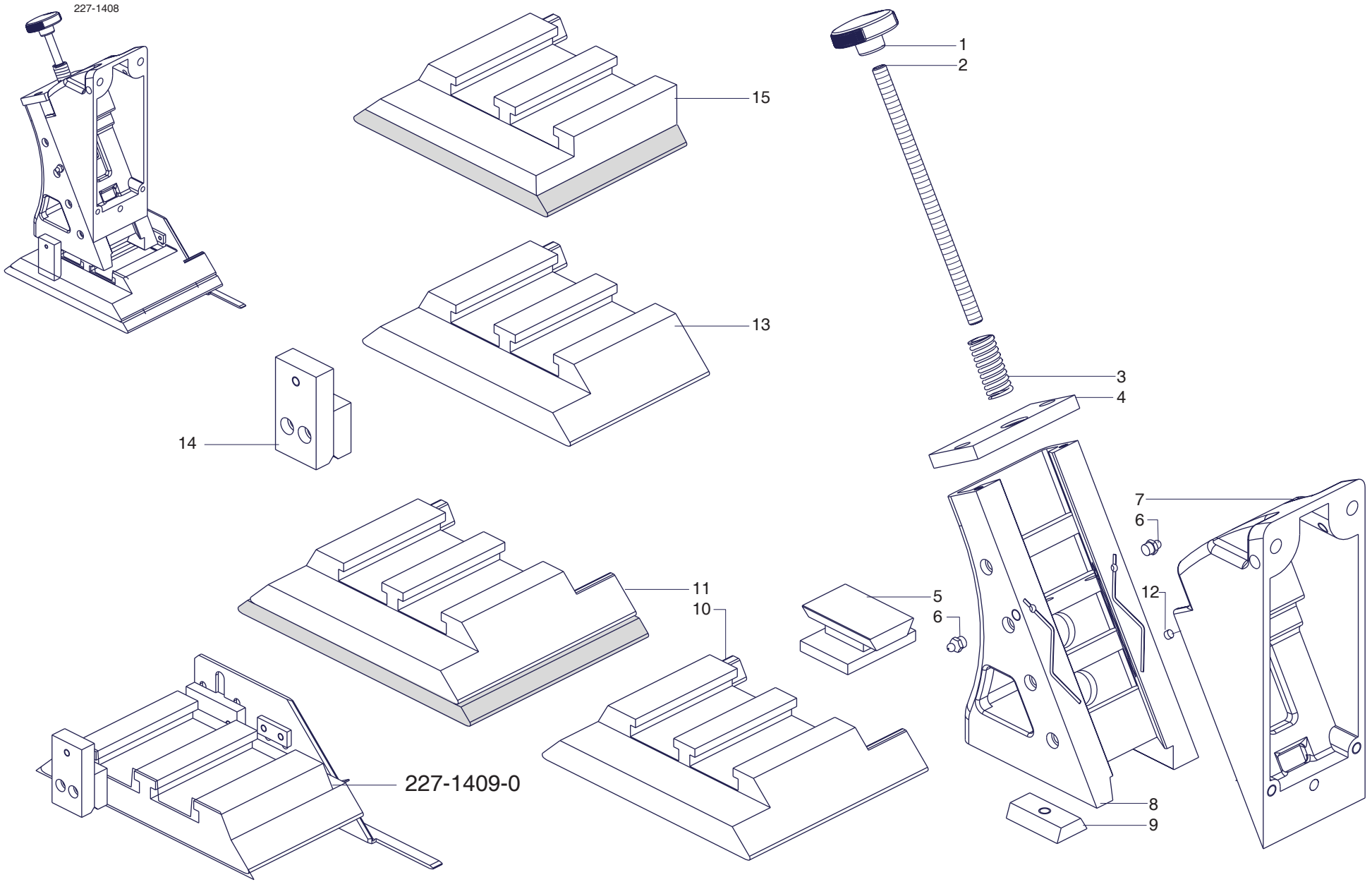


| | | | |
|---|---|---|---|
| scm | SUPERSET XL | PRESSATORE IN USCITA - (01.01.1901 -> - p.20,06,2007)<br>OUTLET HOLD-DOWN UNIT - PRESSEUR EN SORTIE<br>AUSGANGSDRUCKELEMENT - PRENSOR EN SALIDA | 227-1408-0 |

| N | P | C | CODICE | Q.TY | DENOMINAZIONE | DESCRIPTION | DESIGNATION | BEZEICHNUNG | DENOMINACION |
|---|---|---|---|---|---|---|---|---|---|
| | 01.01.1901 -> 01.01.3000 | | | | Note: 5222700004C | | | | |
| 1 | | | 0322730646H | 1.00 | PRESSATORE | PRESSER | PRESSEUR | DRUCKELEMENT | PRENSADOR |
| 2 | | | 0322730648C | 1.00 | PRESSATORE | PRESSER | PRESSEUR | DRUCKELEMENT | PRENSADOR |
| 3 | | | 0322730650F | 1.00 | PRESSATORE | PRESSER | PRESSEUR | DRUCKELEMENT | PRENSADOR |
| 4 | | | 0322730665H | 1.00 | PRESSATORE | PRESSER | PRESSEUR | DRUCKELEMENT | PRENSADOR |
| 5 | | | 0322730664F | 1.00 | PRESSATORE | PRESSER | PRESSEUR | DRUCKELEMENT | PRENSADOR |

2271408X

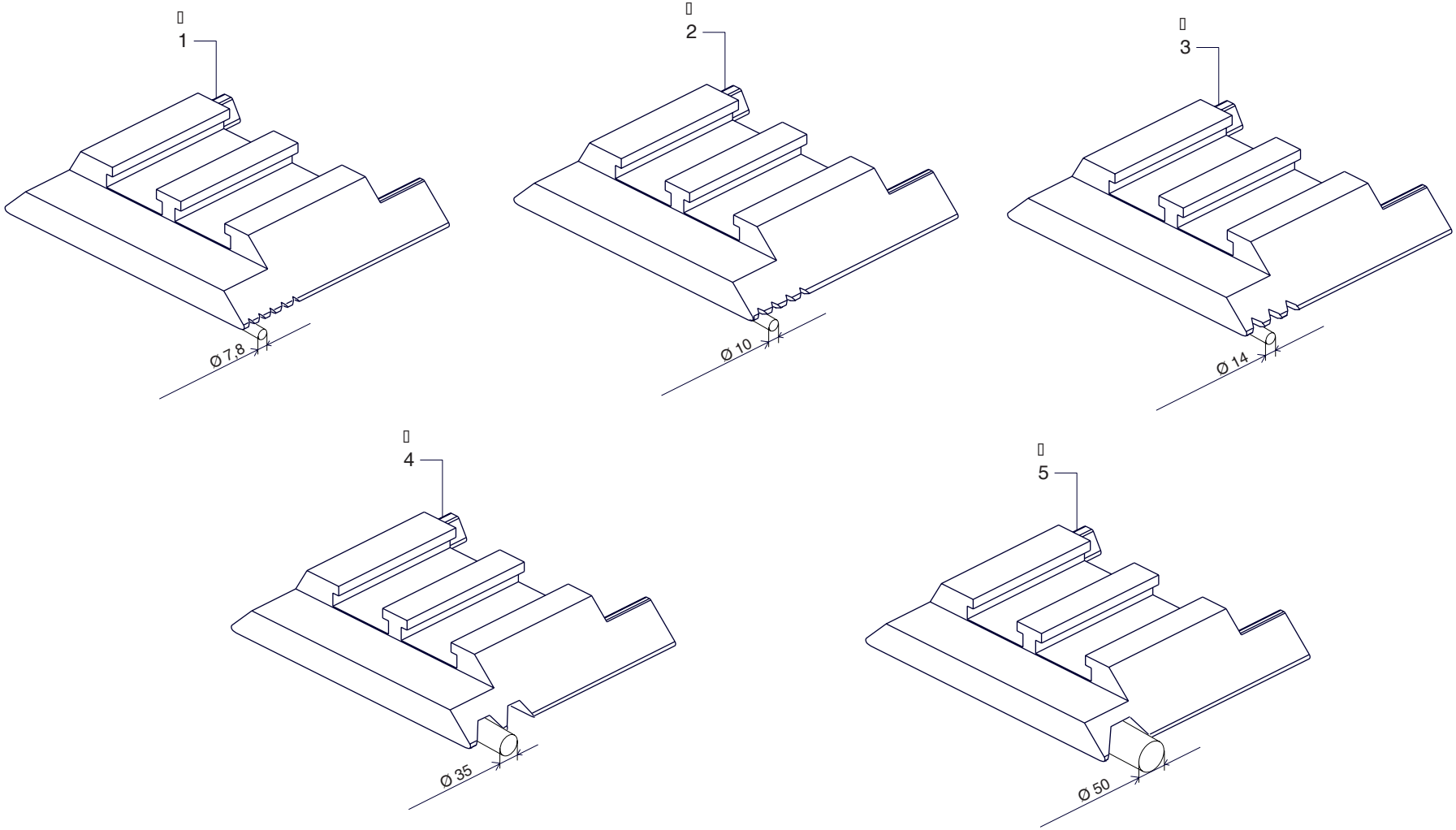

| scm | SUPERSET XL | SEPARATORE DI LISTELLO DX CON O.S. - (p.20,06,2007)<br>RIGHT GLAZE BEAD SEPARATOR - SEPARATEUR PARE-CLOSE DROIT<br>RECHTE GLASLEISTENTRENNVORRICHTUNG - SEPARADOR DE JUNQUILLO DX CON O.S. | 227-1409-0 |
|---|---|---|---|

| N | P | C | CODICE | Q.TY | DENOMINAZIONE | DESCRIPTION | DESIGNATION | BEZEICHNUNG | DENOMINACION |
|---|---|---|---|---|---|---|---|---|---|
| | 01.01.1901 -> 01.01.3000 | | | | Note: 2822730680C | | | | |
| | 1 | | 0521960607G | 1.00 | STAFFA | BRACKET | BRIDE | BUEGEL | ABRAZADERA |
| | 2 | | 0322730681B | 1.00 | SCARPA PRESSATORE | SHOE | SABOT | DRUCKSCHUH | PLANCHA PRENSORA |
| | 3 | | 0321960609G | 1.00 | SUPPORTO | SUPPORT | SUPPORT | STUETZE | SOPORTE |
| | 4 | | 0321960611A | 1.00 | MORSETTO | CLAMP | ETAU | KLEMMELEMENT | MORDAZA |
| | 5 | | 0321960608E | 1.00 | COLTELLO DIVISORE | RIVING KNIFE | COUTEAU DIVISEUR | SPALTKEIL | CUCHILLA DIVISORIA |
| | 6 | | 0319434730B | 1.00 | MOLLA | SPRING | RESSORT | FEDER | RESORTE |
| | 7 | | 0321960610H | 1.00 | SUPPORTO | SUPPORT | SUPPORT | STUETZE | SOPORTE |
| | 8 | | 0321990105D | 1.00 | MARTELLETTO | ANTIKICKBACK FINGER | CLIQUET | RUECKSCHLAGFINGER | MARTINETE |
| | 9 | | 0321990106F | 1.00 | PERNO | PIN | PIVOT | BOLZEN | PERNO |

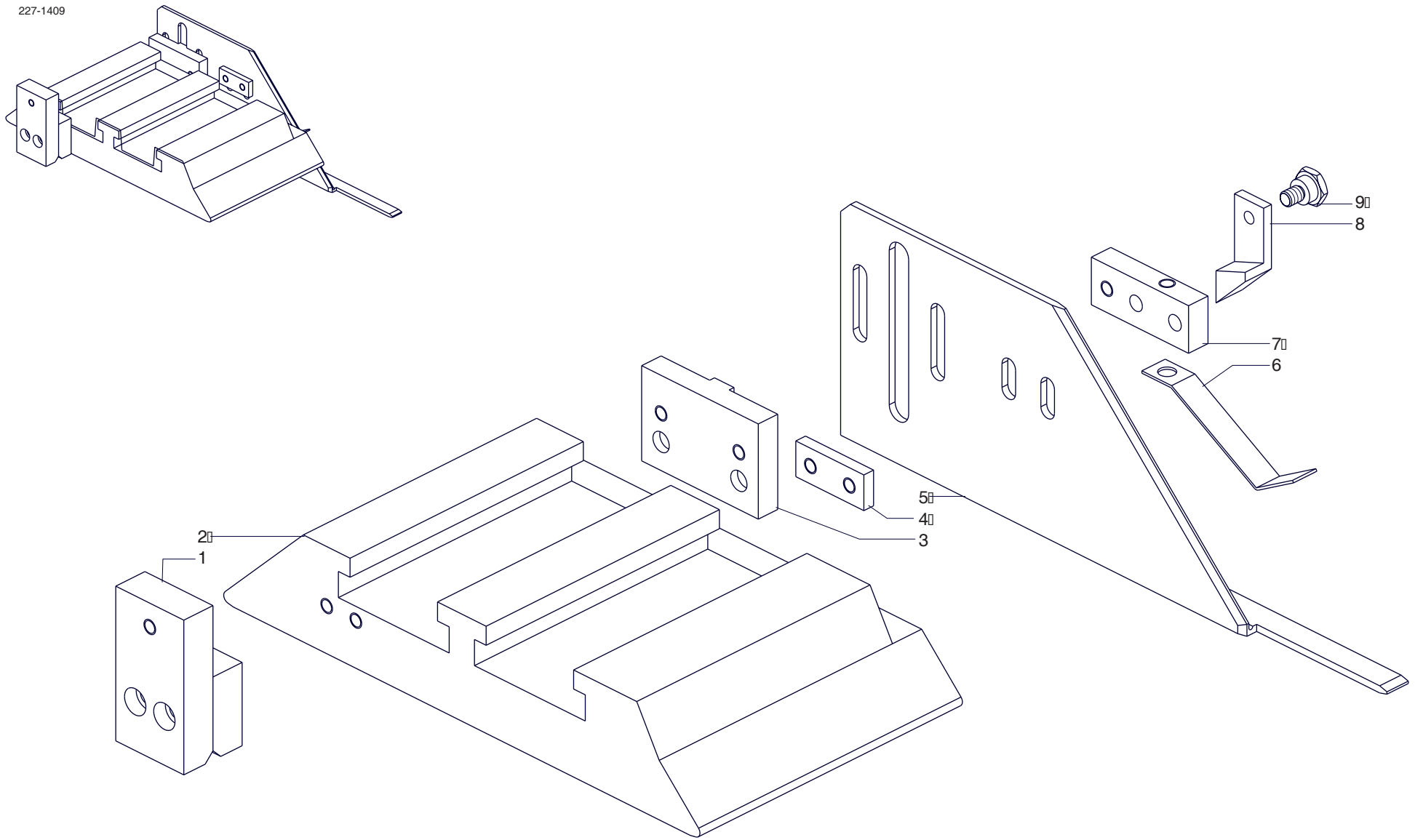


| | | | |
|---|---|---|---|
| scm | SUPERSET XL | SEPARATORE DI LISTELLO DX CON O.S. - (01.01.1901 -> - p.20,06,2007)<br>RIGHT GLAZE BEAD SEPARATOR - SEPARATEUR PARE-CLOSE DROIT<br>RECHTE GLASLEISTENTRENNVORRICHTUNG - SEPARADOR DE JUNQUILLO DX CON O.S. | 227-1409-0 |

| scm | SUPERSET XL | PRESSATORE IN USCITA SEZIONATO - (p.20,06,2007)<br>SECTIONAL PRESSER (EXIT SIDE) - PRESSEUR SECTIONNE (SORTIE)<br>GLIEDER DRUCKELEMENT (EINGABESEITE) - PRENSOR EN SALIDA SECCIONADO | 227-1410-0 |
|---|---|---|---|

| N | P | C | CODICE | Q.TY | DENOMINAZIONE | DESCRIPTION | DESIGNATION | BEZEICHNUNG | DENOMINACION |
|---|---|---|---|---|---|---|---|---|---|
| | 01.01.1901 -> 01.01.3000 | | | | Note: 2822730660A | | | | |
| | 1 | | 0521960705E | 1.00 | SUPPORTO | SUPPORT | SUPPORT | STUETZE | SOPORTE |
| | 2 | | 0000640190G | 4.00 | DADO | NUT | ECROU | MUTTER | TUERCA |
| | 3 | | 0321960707E | 1.00 | PRESSATORE | PRESSER | PRESSEUR | DRUCKELEMENT | PRENSADOR |
| | 4 | | 0521960704C | 1.00 | SUPPORTO | SUPPORT | SUPPORT | STUETZE | SOPORTE |
| | 5 | | 0321960706C | 1.00 | PRESSATORE DESTRO | PRESSER | PRESSEUR | DRUCKELEMENT | PRENSADOR |
| | 6 | | 0719412602C | 1.00 | MANIGLIA | HANDLE | POIGNEE | HANDGRIFF | MANIJA |
| | 7 | | 0321960708G | 1.00 | PERNO | PIN | PIVOT | BOLZEN | PERNO |
| | 8 | | 0000616033E | 1.00 | INGRASSATORE (NIPPLO) | GREASE NIPPLE | NIPPLE | SCHMIERNIPPEL | NIPLE ENGRASADOR |
| | 9 | | 0322730663D | 1.00 | PIATTO | PLATE | PLAT | PLATTE | PLATO |
| | 10 | | 0319012100D | 1.00 | POMELLO | BALL GRIP | POIGNEE | KUGELGRIFF | POMO |
| | 11 | | 0321960703F | 1.00 | LARDONE | GIB | CONTRE-FER | STELLEISTE | CHAVETA |
| | 12 | | 0322730662B | 1.00 | PIASTRA | PLATE | PLAQUE | PLATTE | PLANCHA |
| | 13 | | 0000301363D | 1.00 | DADO | NUT | ECROU | MUTTER | TUERCA |
| | 14 | | 0322730661L | 1.00 | SLITTA | SLIDE | COULISSE | SCHLITTEN | CORREDERA |
| | 15 | | 0319460237H | 1.00 | CHIAVETTA | KEY | CLAVETTE | KEIL | CHAVETA |
| | 16 | | 0322730602E | 1.00 | SUPPORTO | SUPPORT | SUPPORT | STUETZE | SOPORTE |
| | 17 | | 0319013006F | 1.00 | POMOLO | BALL GRIP | GRIFFE | KUGELGRIFF | POMO |
| | 18 | | 0321960416G | 1.00 | MOLLA | SPRING | RESSORT | FEDER | RESORTE |
| | 19 | | 0322730608H | 1.00 | BARRA FILETTATA | THREADED BAR | BARRE | STANGE | BARRA |
| | 20 | | 0511133703G | 1.00 | SCARPA PRESSATRICE | SHOE | SABOT | DRUCKSCHUH | PLANCHA PRENSORA |
| | 21 | | 0511133700A | 1.00 | SCARPA PRESSATRICE | SHOE | SABOT | DRUCKSCHUH | PLANCHA PRENSORA |
| | 22 | | 0311133707B | 1.00 | PRESSATORE DX | PRESSER | PRESSEUR | DRUCKELEMENT | PRENSADOR |
| | 23 | | 0311133708D | 1.00 | PRESSATORE SX | PRESSER | PRESSEUR | DRUCKELEMENT | PRENSADOR |

227-1410

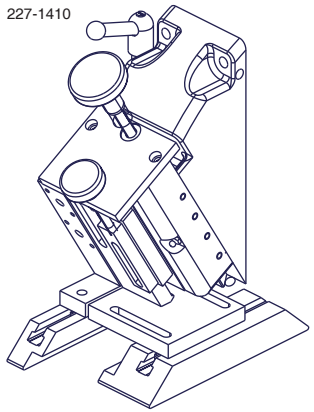

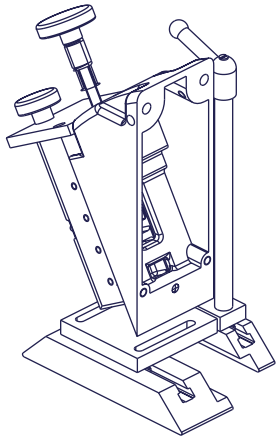

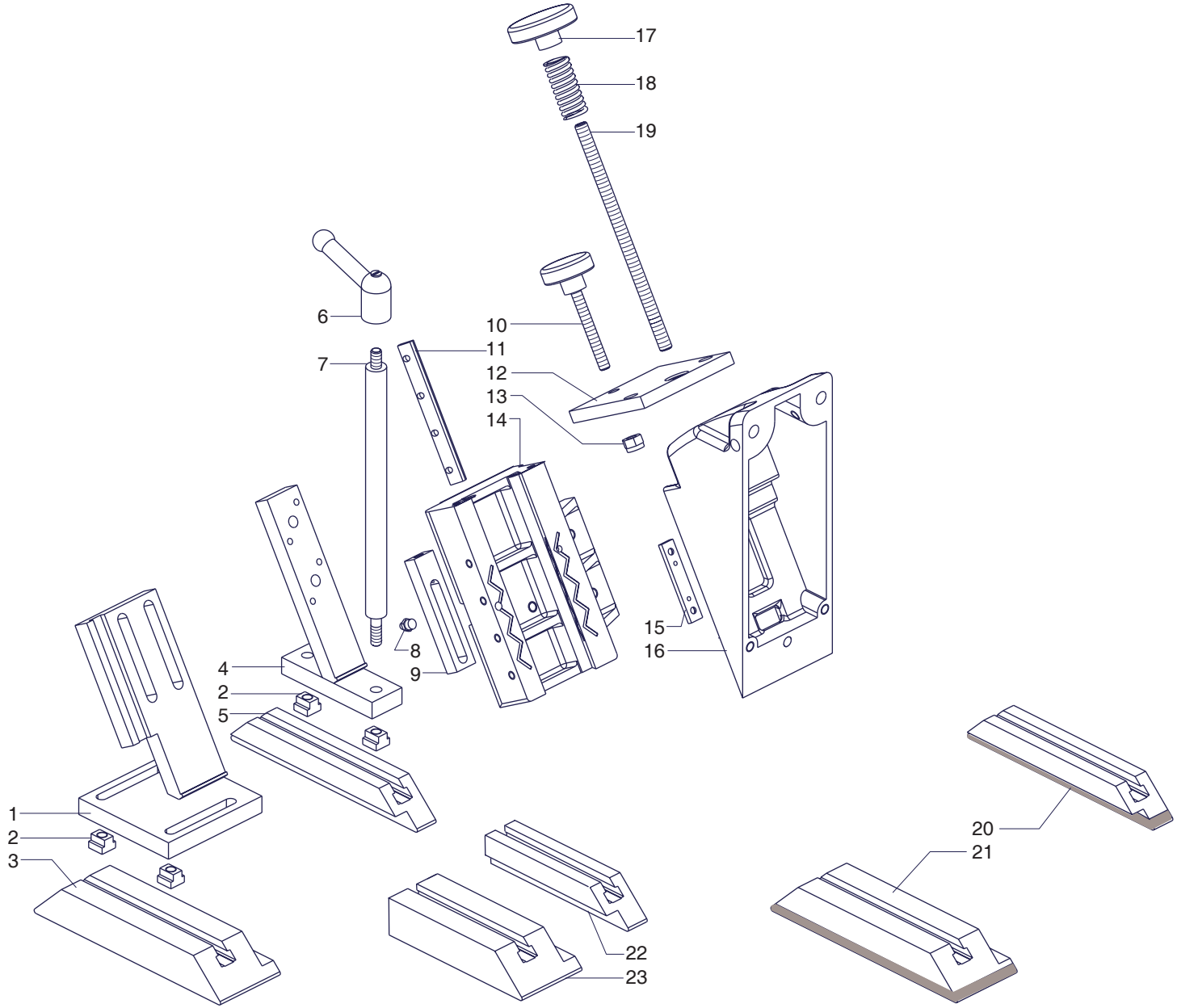


| scm | SUPERSET XL | PRESSATORE IN USCITA SEZIONATO - (01.01.1901 -> - p.20,06,2007)<br>SECTIONAL PRESSER (EXIT SIDE) - PRESSEUR SECTIONNE (SORTIE)<br>GLIEDER DRUCKELEMENT (EINGABESEITE) - PRENSOR EN SALIDA SECCIONADO | 227-1410-0 |
|---|---|---|---|

| N | P | C | CODICE | Q.TY | DENOMINAZIONE | DESCRIPTION | DESIGNATION | BEZEICHNUNG | DENOMINACION |
|---|---|---|---|---|---|---|---|---|---|
| | 01.01.1901 -> 01.01.3000 | | | | Note: 2822730560H | | | | |
| 1 | | | 0322730628A | 1.00 | SCHERMO | GUARD | ECRAN | ABDECKUNG | PANTALLA |
| 2 | | | 0322730627H | 1.00 | SCHERMO | GUARD | ECRAN | ABDECKUNG | PANTALLA |
| 3 | | | 0322730163C | 1.00 | PERNO | PIN | PIVOT | BOLZEN | PERNO |
| 4 | | | 0321960416G | 1.00 | MOLLA | SPRING | RESSORT | FEDER | RESORTE |
| 4 | | | 0322730508F | 1.00 | MOLLA | SPRING | RESSORT | FEDER | RESORTE |
| 5 | | | 0000601156H | 2.00 | BOCCOLA | BUSHING | DOUILLE | BUCHSE | CASQUILLO |
| 5 | | | 0000601156H | 2.00 | BOCCOLA | BUSHING | DOUILLE | BUCHSE | CASQUILLO |
| 5 | | | 0000613129F | 2.00 | BOCCOLA AUTOL. | SELF-LUBRICATING BUSH | DOUILLE AUTOLUBRIFIANTE | SELBSTSCHMIER. BUCHSE | ANILL.AUTOLUB. |
| 6 | | | 0310031017B | 1.00 | SUPPORTO | SUPPORT | SUPPORT | STUETZE | SOPORTE |
| 6 | | | 0322730123H | 1.00 | SUPPORTO | SUPPORT | SUPPORT | STUETZE | SOPORTE |
| 6 | | | 0322730198G | 1.00 | SUPPORTO | SUPPORT | SUPPORT | STUETZE | SOPORTE |
| 6 | | | 0322730199L | 1.00 | SUPPORTO | SUPPORT | SUPPORT | STUETZE | SOPORTE |
| 7 | | | 0322730610B | 1.00 | SCARPA PRESSATRICE | SHOE | SABOT | DRUCKSCHUH | PLANCHA PRENSORA |
| 8 | | | 0311132515C | 1.00 | PERNO | PIN | PIVOT | BOLZEN | PERNO |
| 8 | | | 0311132515C | 1.00 | PERNO | PIN | PIVOT | BOLZEN | PERNO |
| 8 | | | 0322730613H | 1.00 | PERNO | PIN | PIVOT | BOLZEN | PERNO |
| 9 | | | 0322730612F | 1.00 | SCHERMO | GUARD | ECRAN | ABDECKUNG | PANTALLA |
| 9 | | | 0322730627H | 1.00 | SCHERMO | GUARD | ECRAN | ABDECKUNG | PANTALLA |
| 9 | | | 0322730652A | 1.00 | SCHERMO | GUARD | ECRAN | ABDECKUNG | PANTALLA |
| 10 | | | 0322730651H | 1.00 | SCARPA PRESSATRICE | SHOE | SABOT | DRUCKSCHUH | PLANCHA PRENSORA |

227-1411

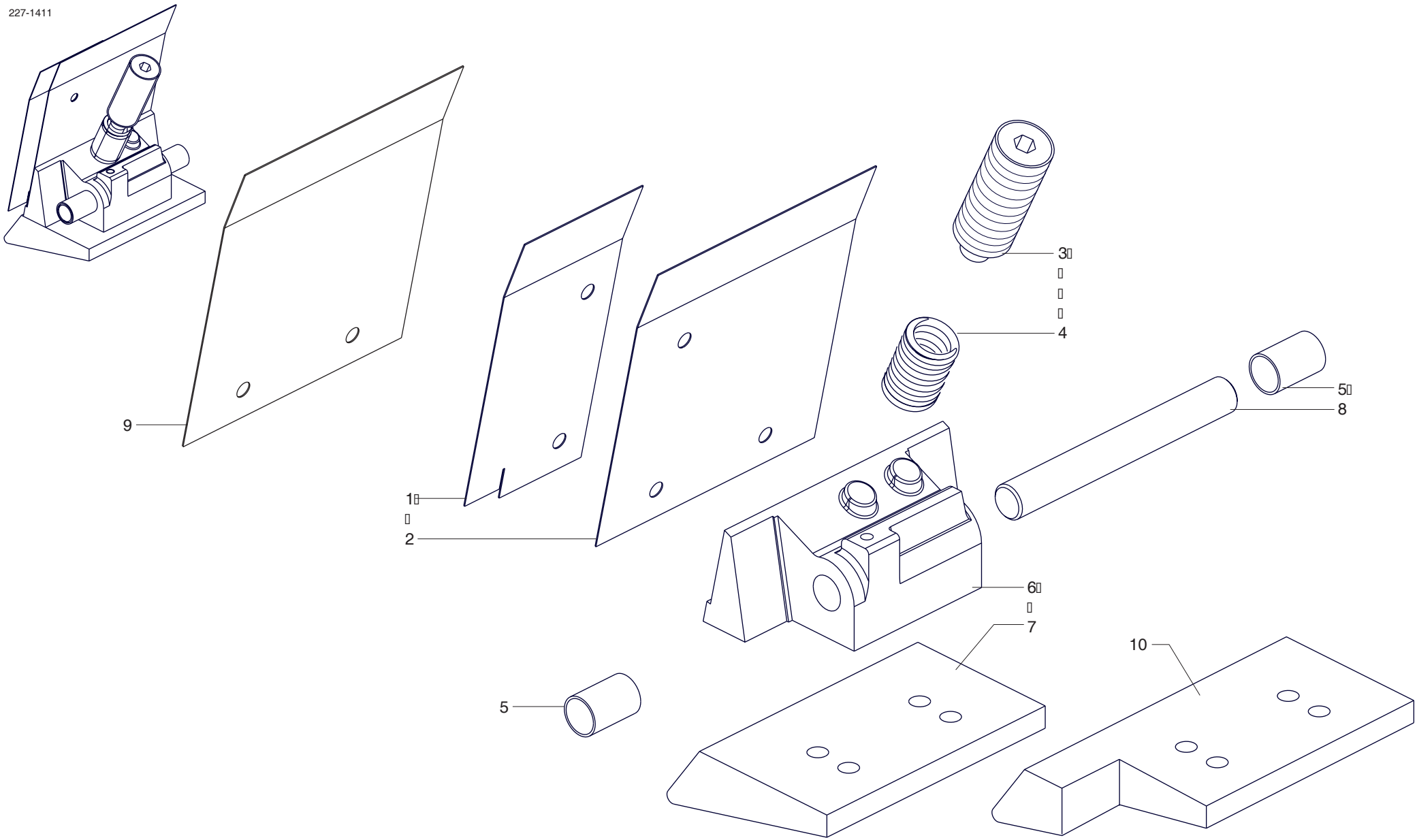


| scm | SUPERSET XL | PRESSATORE IN ENTRATA - (01.01.1901 -> - p.20,06,2007)<br>PRESSER (ENTRY SIDE) - PRESSEUR EN ENTREE<br>DRUCKELEMENT (EINGABESEITE) - PRENSOR EN ENTRADA | 227-1411-0 |
|---|---|---|---|

| scm | SUPERSET XL | PRESSATORE IN ENTRATA CROMATO - (p.20,06,2007)<br>PRESSER (ENTRY SIDE) - PRESSEUR EN ENTREE<br>DRUCKELEMENT (EINGABESEITE) - PRENSOR EN ENTRADA | 227-1411-X |
|---|---|---|---|

| N | P | C | CODICE | Q.TY | DENOMINAZIONE | DESCRIPTION | DESIGNATION | BEZEICHNUNG | DENOMINACION |
|---|---|---|---|---|---|---|---|---|---|
| | 01.01.1901 -> 01.01.3000 | | | | Note: ----- | | | | |
| | 1 | | 0711136303F | 1.00 | GIUNTO | JOINT | JOINT | KUPPLUNG | JUNTA |
| | 2 | | 0000644268H | 1.00 | ANELLO SEEGER | CIRCLIP | CIRCLIP | SEEGERRING | SEEGER |
| | 3 | | 0316031000H | 1.00 | DISTANZIALE | SPACER | ENTRETOISE | DISTANZSTUECK | DISTANCIADOR |
| | 4 | | 0000644043A | 1.00 | ANELLO SEEGER | CIRCLIP | CIRCLIP | SEEGERRING | SEEGER |
| | 5 | | 0000606100E | 1.00 | CUSCINETTO | BEARING | ROULEMENT | LAGER | COJINETE |
| | 6 | | 0310190116E | 1.00 | VITE SENZA FINE | WORM | VIS SANS FIN | SCHNECKE | TORNILO SIN FIN |
| | 7 | | 0316030500H | 1.00 | BOCCOLA | BUSHING | DOUILLE | BUCHSE | CASQUILLO |
| | 8 | | 0310130604G | 1.00 | SCATOLA DI RINVIO | TRANSFER CASE | BOITE | VORGELEGEKASTEN | CAJA |
| | 9 | | 0000613034D | 4.00 | RALLA | WASHER | CRAPAUDINE | SCHEIBE | RANGUA |
| | 10 | | 0000613033B | 2.00 | GABBIA A RULLINI | ROLLER CAGE | CAGE A ROULEAUX | WALZENKAEFIG | COJINETE |
| | 11 | | 0319430904G | 1.00 | CORONA DENTATA | GEAR WHEEL | COURONNE DENTEE | ZAHNRAD | RUEDA DENTADA |
| | 12 | | 0000645045F | 1.00 | LINGUETTA | FEATHER KEY | LANGUETTE | FEDERKEIL | LINGUETA |
| | 13 | | 0322730615C | 1.00 | VITE | SCREW | VIS | SCHRAUBE | TORNILLO |
| | 14 | | 0000635039B | 1.00 | INDICATORE NUMERICO | INDICATOR | INDICATEUR | ANZEIGER | INDICADOR |
| | 15 | | 0522730170B | 1.00 | FLANGIA | FLANGE | FLASQUE | FLANSCH | BRIDA |
| | 16 | | 0310031018D | 1.00 | PERNO | PIN | PIVOT | BOLZEN | PERNO |
| | 17 | | 0000613045G | 2.00 | RALLA | WASHER | CRAPAUDINE | SCHEIBE | RANGUA |
| | 18 | | 0000644268H | 2.00 | ANELLO SEEGER | CIRCLIP | CIRCLIP | SEEGERRING | SEEGER |
| | 19 | | 0322730171L | 1.00 | BOCCOLA | BUSHING | DOUILLE | BUCHSE | CASQUILLO |
| | 20 | | 0722740133A | 1.00 | GIUNTO | JOINT | JOINT | KUPPLUNG | JUNTA |
| | 21 | | 0322730629C | 1.00 | GOMMA | RUBBER | GOMME | GUMMI | GOMA |
| | 22 | | 0322730723B | 1.00 | COPERCHIO | COVER | COUVERCLE | DECKEL | TAPA |
| | 23 | | 0522730716B | 1.00 | CUFFIA | HOOD | HOTTE | HAUBE | CAMPANA |
| | 24 | | 0522730717D | 1.00 | ATTACCO | CONNECTING ROD | BARRE FIXATION | STAB | CONEXION |
| | 25 | | 0322730712H | 1.00 | SCHERMO | GUARD | ECRAN | ABDECKUNG | PANTALLA |
| | 26 | | 0322730709C | 1.00 | PROTEZIONE | GUARD | PROTECTION | ABDECKUNG | PROTECCION |
| | 27 | | 0322730722L | 4.00 | PERNO | PIN | PIVOT | BOLZEN | PERNO |
| | 28 | | 0322730702G | 1.00 | SUPPORTO | SUPPORT | SUPPORT | STUETZE | SOPORTE |
| | 29 | | 0322730731H | 1.00 | SCARPA PRESSATRICE CROMAT | SHOE | SABOT | DRUCKSCHUH | PLANCHA PRENSORA |
| | 30 | | 0000613114D | 9.00 | BOCCOLA | BUSHING | DOUILLE | BUCHSE | CASQUILLO |
| | 31 | | 0322730721G | 2.00 | BIELLA | CONNECTING ROD | BIELLE | PLEUELSTANGE | BIELA |
| | 32 | | 0510130220F | 1.00 | BATTUTA | STOP | BUTEE | ANSCHLAG | TOPE |
| | 33 | | 0000301431H | 1.00 | DADO | NUT | ECROU | MUTTER | TUERCA |
| | 34 | | 0322730719D | 1.00 | STELO | STEM | TIGE | SCHAFT | VASTAGO |
| | 35 | | 0322730728C | 2.00 | PERNO | PIN | PIVOT | BOLZEN | PERNO |
| | 36 | | 0322730704B | 1.00 | PERNO | PIN | PIVOT | BOLZEN | PERNO |
| | 37 | | 0322730718B | 1.00 | SUPPORTO | SUPPORT | SUPPORT | STUETZE | SOPORTE |
| | 38 | | 0316081500A | 1.00 | MOLLA | SPRING | RESSORT | FEDER | RESORTE |
| | 39 | | 0316081600C | 1.00 | MANOPOLA | HAND GRIP | POIGNEE | GRIFF | MANOPLA |

| N | P | C | CODICE | Q.TY | DENOMINAZIONE | DESCRIPTION | DESIGNATION | BEZEICHNUNG | DENOMINACION |
|---|---|---|---|---|---|---|---|---|---|
| | 40 | | 0322730713A | 1.00 | PROTEZIONE | GUARD | PROTECTION | ABDECKUNG | PROTECCION |
| | 41 | | 0322730715E | 1.00 | PROTEZIONE | GUARD | PROTECTION | ABDECKUNG | PROTECCION |
| | 42 | | 0302110049H | 1.00 | TARGA | PLATE | PLAQUE | SCHILD | TARJETA |
| | 43 | | 0321910790H | 1.00 | TARGA | PLATE | PLAQUE | SCHILD | TARJETA |
| | 44 | | 0322775006E | 1.00 | TARGA | PLATE | PLAQUE | SCHILD | TARJETA |

2271411X

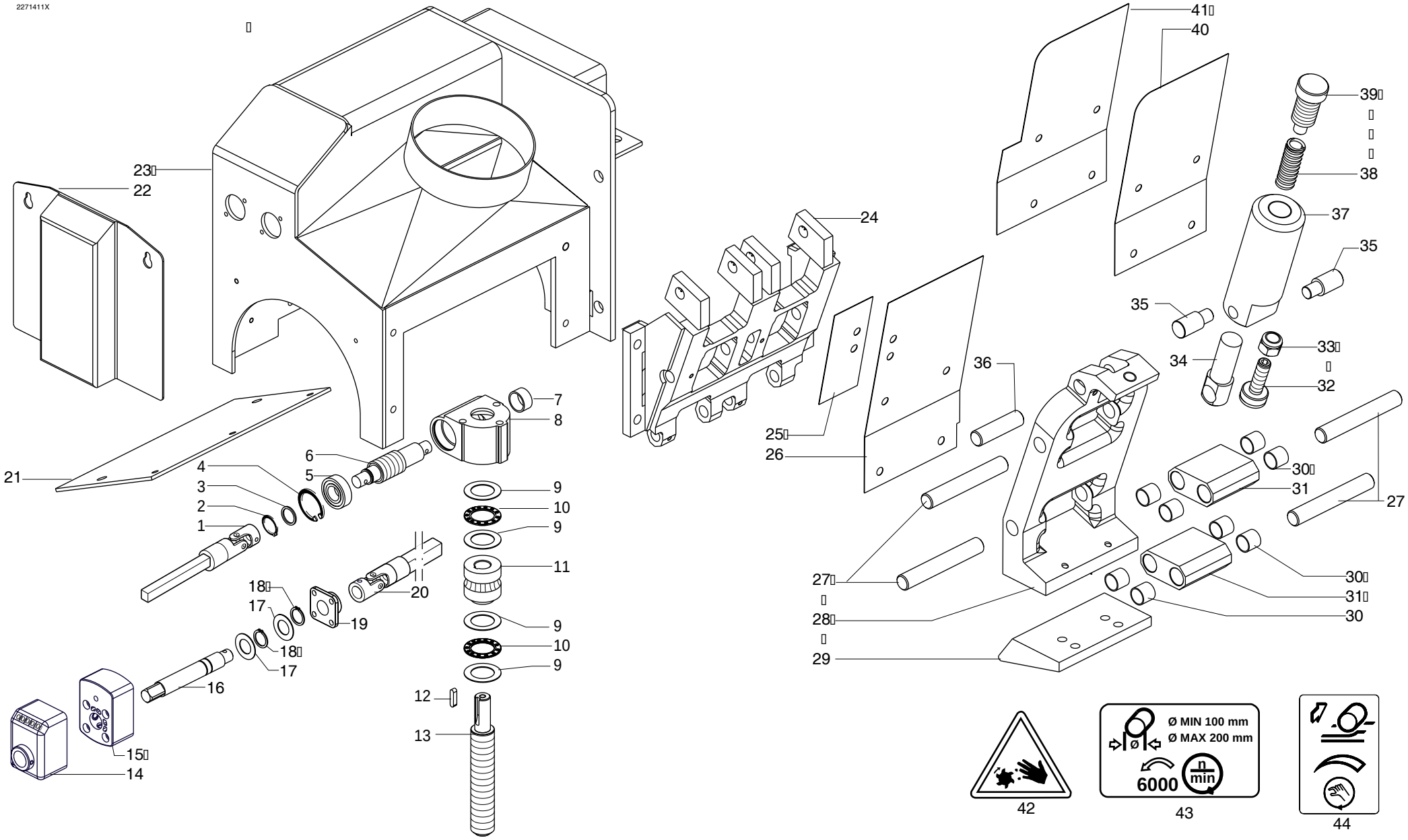


| | | | |
|---|---|---|---|
| scm | SUPERSET XL | PRESSATORE IN ENTRATA CROMATO - (01.01.1901 -> - p.20,06,2007)<br>PRESSER (ENTRY SIDE) - PRESSEUR EN ENTREE<br>DRUCKELEMENT (EINGABESEITE) - PRENSOR EN ENTRADA | 227-1411-X |

| scm | SUPERSET XL | PRESSATORE PNEUMATICO IN ENTRATA - (p.20,06,2007)<br>PNEUM. PRESSER (ENTRY SIDE) - PRESSEUR PNEUM. EN ENTREE<br>PNEUM. DRUCKELEMENT (EINGABESEITE) - PRENSOR NEUMATICO EN ENTRADA | 227-1412-0 |
|---|---|---|---|

| N | P | C | CODICE | Q.TY | DENOMINAZIONE | DESCRIPTION | DESIGNATION | BEZEICHNUNG | DENOMINACION |
|---|---|---|---|---|---|---|---|---|---|
| 01.01.1901 -> 01.01.3000 | | | | | Note: 2822730700F | | | | |
| 1 | | | 0001502627A | 1.00 | CILINDRO PNEUMATICO | PNEUMATIC CYLINDER | CYLINDRE PNEUMATIQUE | PNEUMATIKZYLINDER | CILINDRO NEUMATICO |
| 2 | | | 0000626025A | 1.00 | CERNIERA | HINGE | CHARNIERE | SCHARNIER | BISAGRA |
| 3 | | | 0322730706F | 2.00 | PERNO | PIN | PIVOT | BOLZEN | PERNO |
| 4 | | | 0322730705D | 1.00 | CERNIERA | HINGE | CHARNIERE | SCHARNIER | BISAGRA |
| 5 | | | 0322730709C | 1.00 | PROTEZIONE | GUARD | PROTECTION | ABDECKUNG | PROTECCION |
| 6 | | | 0322730613H | 4.00 | PERNO | PIN | PIVOT | BOLZEN | PERNO |
| 7 | | | 0322730702G | 1.00 | SUPPORTO | SUPPORT | SUPPORT | STUETZE | SOPORTE |
| 8 | | | 0322730708A | 1.00 | SCARPA PRESSATRICE | SHOE | SABOT | DRUCKSCHUH | PLANCHA PRENSORA |
| 8 | | | 0322730714C | 1.00 | SCARPA PRESSATRICE | SHOE | SABOT | DRUCKSCHUH | PLANCHA PRENSORA |
| 9 | | | 0000613129F | 8.00 | BOCCOLA AUTOL. | SELF-LUBRICATING BUSH | DOUILLE AUTOLUBRIFIANTE | SELBSTSCHMIER. BUCHSE | ANILL.AUTOLUB. |
| 10 | | | 0322730703L | 2.00 | BIELLA | CONNECTING ROD | BIELLE | PLEUELSTANGE | BIELA |
| 11 | | | 0510130220F | 1.00 | BATTUTA | STOP | BUTEE | ANSCHLAG | TOPE |
| 12 | | | 0000301431H | 1.00 | DADO | NUT | ECROU | MUTTER | TUERCA |
| 13 | | | 0322730704B | 1.00 | PERNO | PIN | PIVOT | BOLZEN | PERNO |
| 14 | | | 0000613114D | 1.00 | BOCCOLA | BUSHING | DOUILLE | BUCHSE | CASQUILLO |
| 15 | | | 0322730712H | 1.00 | SCHERMO | GUARD | ECRAN | ABDECKUNG | PANTALLA |
| 16 | | | 0322730713A | 1.00 | PROTEZIONE | GUARD | PROTECTION | ABDECKUNG | PROTECCION |
| 16 | | | 0322730715E | 1.00 | PROTEZIONE | GUARD | PROTECTION | ABDECKUNG | PROTECCION |

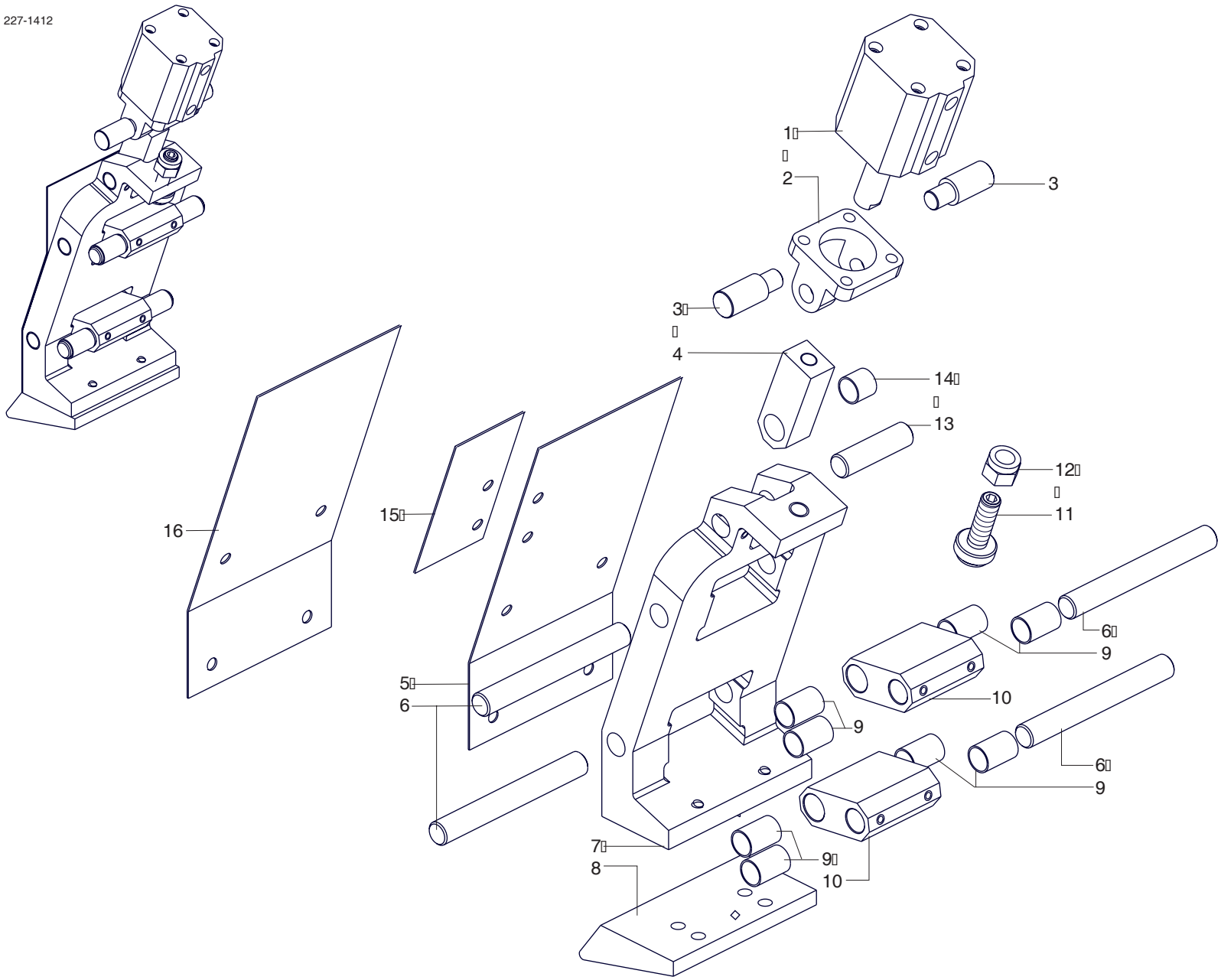


| | | | |
|---|---|---|---|
| scm | SUPERSET XL | PRESSATORE PNEUMATICO IN ENTRATA - (01.01.1901 -> - p.20,06,2007)<br>PNEUM. PRESSER (ENTRY SIDE) - PRESSEUR PNEUM. EN ENTREE<br>PNEUM. DRUCKELEMENT (EINGABESEITE) - PRENSOR NEUMATICO EN ENTRADA | 227-1412-0 |

| N | P | C | CODICE | Q.TY | DENOMINAZIONE | DESCRIPTION | DESIGNATION | BEZEICHNUNG | DENOMINACION |
|---|---|---|---|---|---|---|---|---|---|
| | 01.01.1901 -> 01.01.3000 | | | | Note: 2822730585B | | | | |
| | 1 | | 0322730628A | 1.00 | SCHERMO | GUARD | ECRAN | ABDECKUNG | PANTALLA |
| | 2 | | 0322730612F | 1.00 | SCHERMO | GUARD | ECRAN | ABDECKUNG | PANTALLA |
| | 2 | | 0322730627H | 1.00 | SCHERMO | GUARD | ECRAN | ABDECKUNG | PANTALLA |
| | 3 | | 0322730163C | 1.00 | PERNO | PIN | PIVOT | BOLZEN | PERNO |
| | 4 | | 0321960416G | 1.00 | MOLLA | SPRING | RESSORT | FEDER | RESORTE |
| | 4 | | 0322730508F | 1.00 | MOLLA | SPRING | RESSORT | FEDER | RESORTE |
| | 5 | | 0000613129F | 2.00 | BOCCOLA AUTOL. | SELF-LUBRICATING BUSH | DOUILLE AUTOLUBRIFIANTE | SELBSTSCHMIER. BUCHSE | ANILL.AUTOLUB. |
| | 5 | | 0000613199D | 2.00 | BOCCOLA | BUSHING | DOUILLE | BUCHSE | CASQUILLO |
| | 6 | | 0322730634C | 1.00 | SUPPORTO | SUPPORT | SUPPORT | STUETZE | SOPORTE |
| | 6 | | 0322730666A | 1.00 | SUPPORTO | SUPPORT | SUPPORT | STUETZE | SOPORTE |
| | 7 | | 0322730635E | 1.00 | SCARPA PRESSATRICE | SHOE | SABOT | DRUCKSCHUH | PLANCHA PRENSORA |
| | 8 | | 0322730589G | 1.00 | PERNO | PIN | PIVOT | BOLZEN | PERNO |
| | 8 | | 0322730636G | 1.00 | PERNO | PIN | PIVOT | BOLZEN | PERNO |

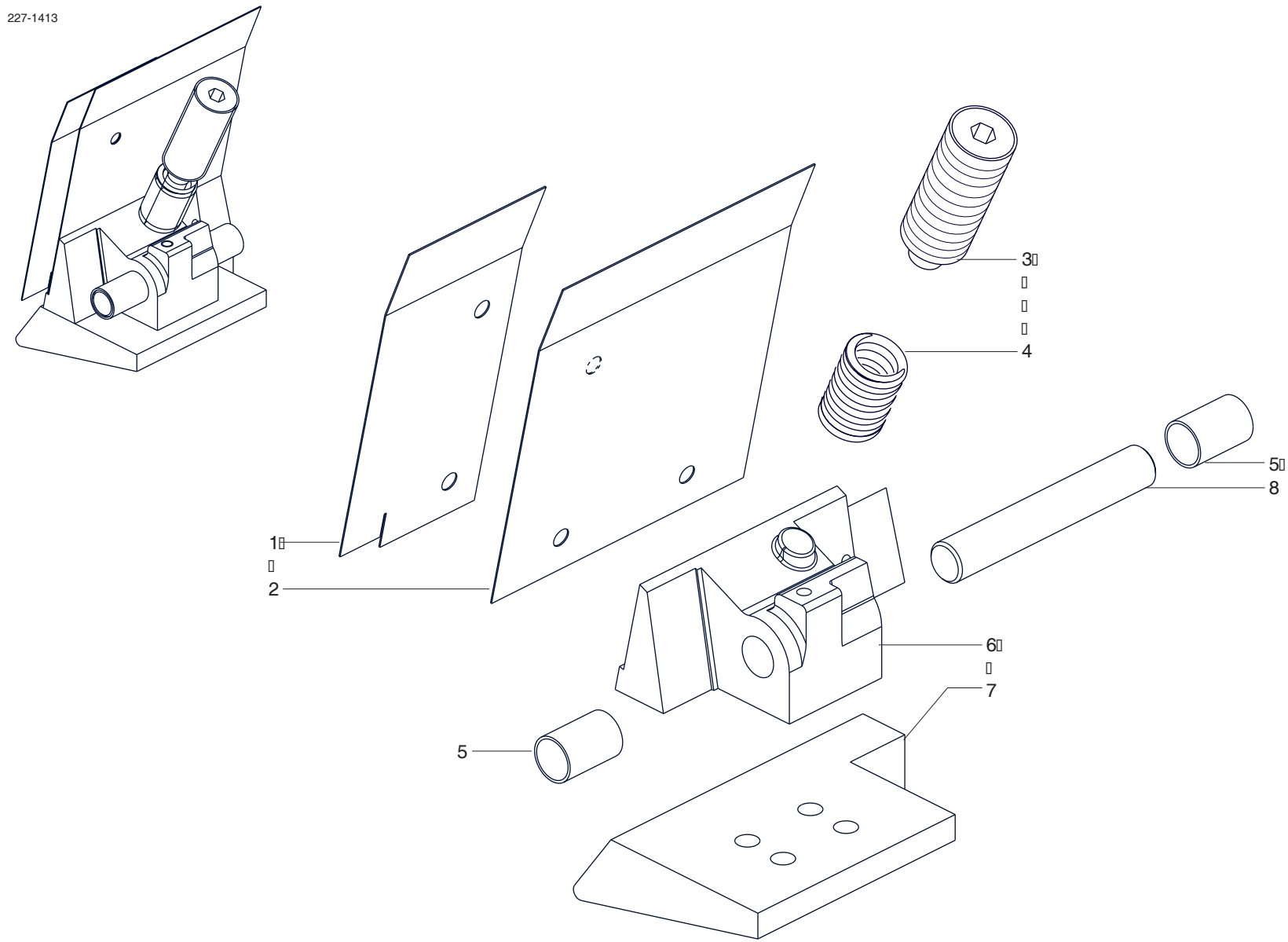


| | | | |
|---|---|---|---|
| scm | SUPERSET XL | PRESSATORE (TTL) - (01.01.1901 ->  - p.20,06,2007)<br>PRESSER (TTL) - PRESSEUR (TTL)<br>DRUCKELEMENT (TTL) - PRENSOR (TTL) | 227-1413-0 |

| scm | SUPERSET XL | ALBERO ORIZZONTALE SUPERIORE - (p.20,06,2007)<br>TOP HORIZONTAL SPINDLE - ARBRE HORIZONTAL SUPERIEUR<br>OBERE HORIZONTALWELLE - EJE HORIZONTAL SUPERIOR | 227-1420-0 |
|---|---|---|---|

| N | P | C | CODICE | Q.TY | DENOMINAZIONE | DESCRIPTION | DESIGNATION | BEZEICHNUNG | DENOMINACION |
|---|---|---|---|---|---|---|---|---|---|
| | 01.01.1901 -> 01.01.3000 | | | | Note: ----- | | | | |
| | 1 | | 1111111111F | 0.00 | INDICE | POINTER | INDICATEUR | ZEIGER | INDICE |

227-1420

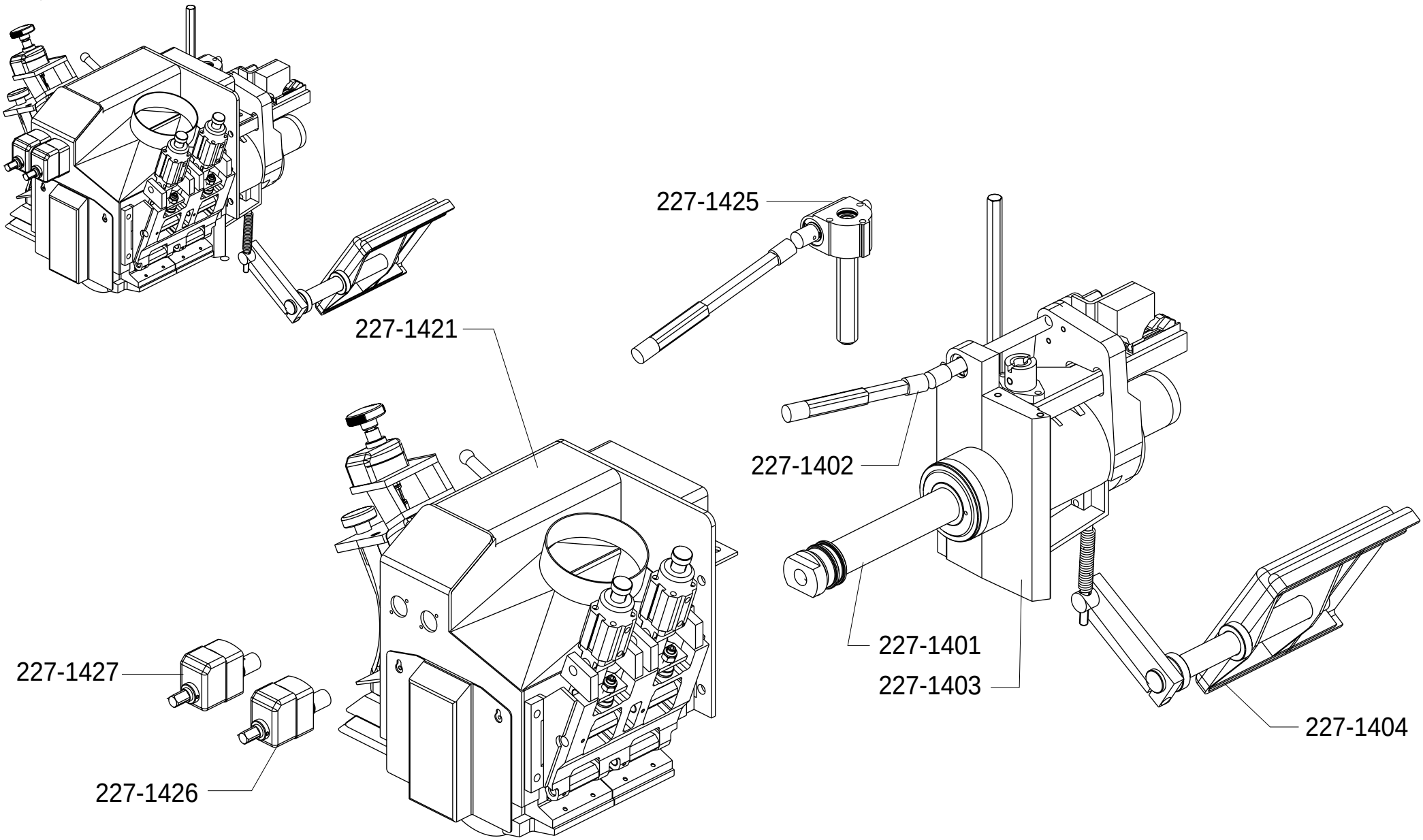


| | | | |
|---|---|---|---|
| scm | SUPERSET XL | ALBERO ORIZZONTALE SUPERIORE - (01.01.1901 -> - p.20,06,2007)<br>TOP HORIZONTAL SPINDLE - ARBRE HORIZONTAL SUPERIEUR<br>OBERE HORIZONTALWELLE - EJE HORIZONTAL SUPERIOR | 227-1420-0 |

| scm | SUPERSET XL | CUFFIA D'ASPIRAZIONE (O.S.) - (p.20,06,2007)<br>SUCTION HOOD (TOP HORIZ. SPINDLE) - HOTTE D'ASPIRATION (ARBRE HORIZ. SUP.)<br>ABSAUGHAUBE - CAMPANA DE ASPIRACION (H.S) | 227-1421-0 |
|---|---|---|---|

| N | P | C | CODICE | Q.TY | DENOMINAZIONE | DESCRIPTION | DESIGNATION | BEZEICHNUNG | DENOMINACION |
|---|---|---|---|---|---|---|---|---|---|
| | 01.01.1901 -> 01.01.3000 | | | | Note: ----- | | | | |
| | 1 | | 1111111111F | 0.00 | INDICE | POINTER | INDICATEUR | ZEIGER | INDICE |

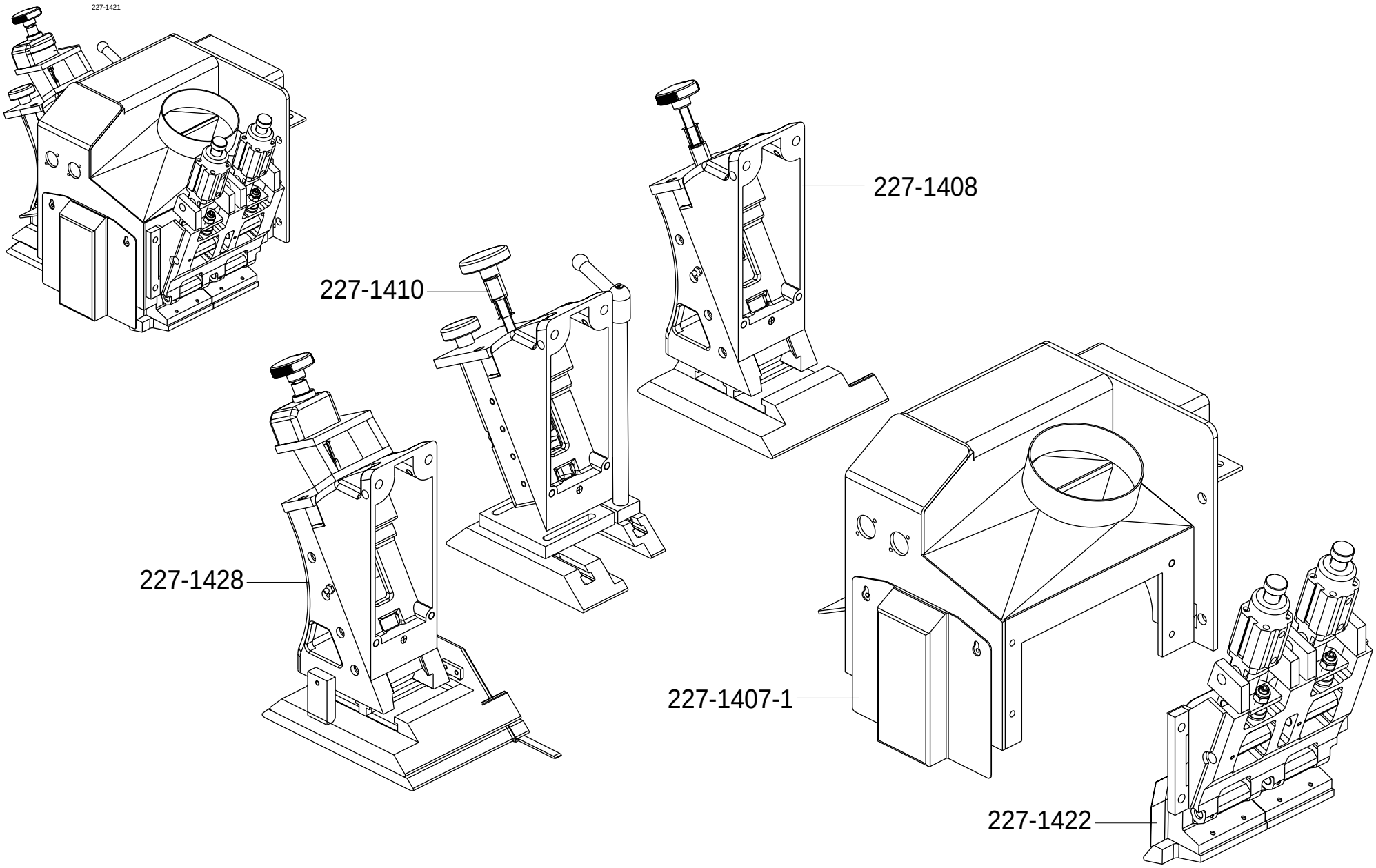


| | | | |
|---|---|---|---|
| scm | **SUPERSET XL** | **CUFFIA D'ASPIRAZIONE (O.S.) - (01.01.1901 -> - p.20,06,2007)**<br>**SUCTION HOOD (TOP HORIZ. SPINDLE) - HOTTE D'ASPIRATION (ARBRE HORIZ. SUP.)**<br>**ABSAUGHAUBE - CAMPANA DE ASPIRACION (H.S)** | **227-1421-0** |

| N | P | C | CODICE | Q.TY | DENOMINAZIONE | DESCRIPTION | DESIGNATION | BEZEICHNUNG | DENOMINACION |
|---|---|---|---|---|---|---|---|---|---|
| | 01.01.1901 -> 01.01.3000 | | | | Note: ----- | | | | |
| | 1 | | 0322730726H | 1.00 | ATTACCO IN GHISA | CONNECTING ROD | BARRE FIXATION | STAB | CONEXION |
| | 1 | | 0522730717D | 1.00 | ATTACCO | CONNECTING ROD | BARRE FIXATION | STAB | CONEXION |

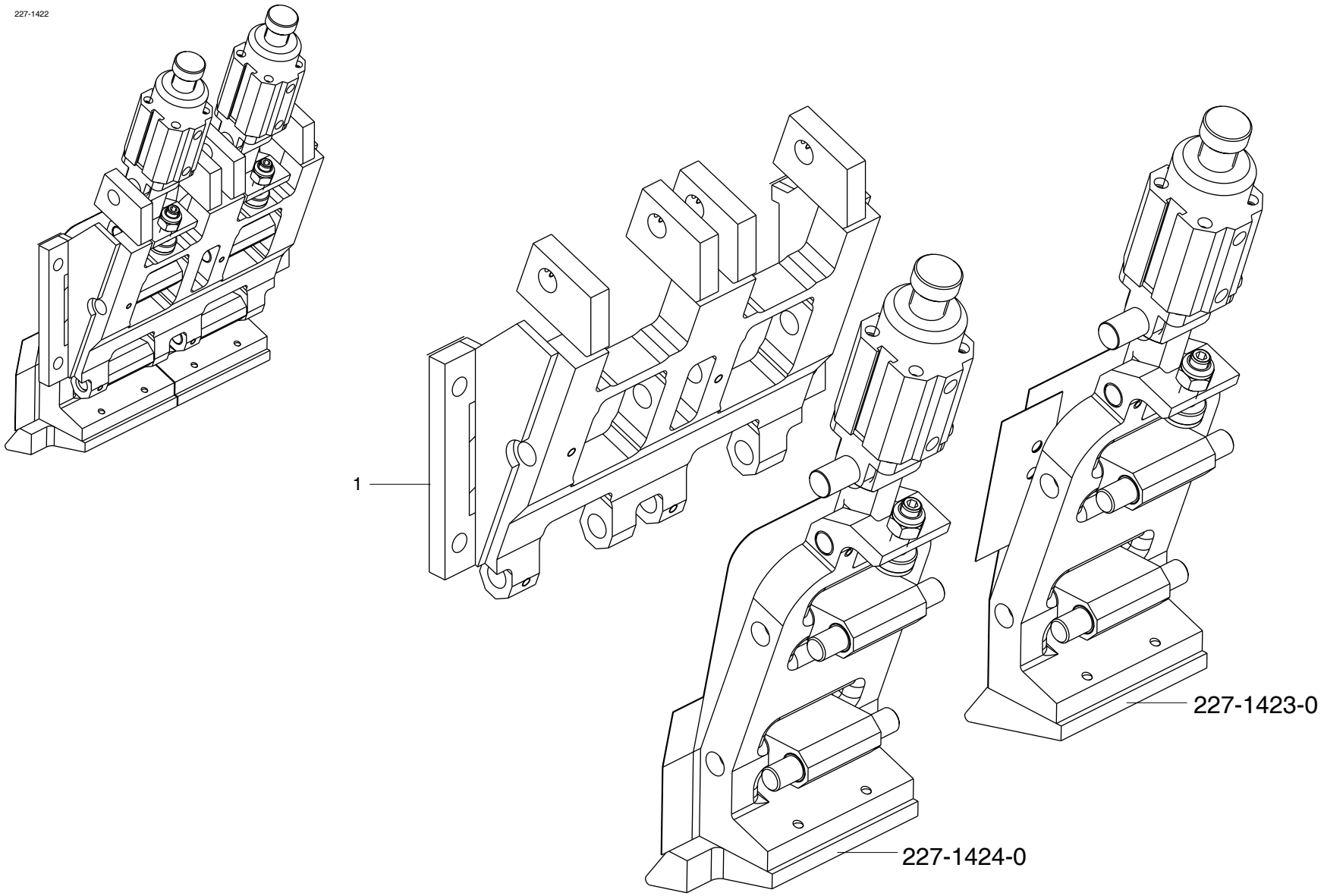


| | | | |
|---|---|---|---|
| scm | SUPERSET XL | PRESSATORI (O.S.) - (01.01.1901 -> - p.20,06,2007)<br>PRESSERS - PRESSEURS<br>DRUCKELEMENTE - PRENSORES (H.S.) | 227-1422-0 |

| scm | SUPERSET XL | PRESSATORE IN ENTRATA (O.S. DX) - (p.20,06,2007)<br>PRESSER (ENTRY SIDE) - PRESSEUR EN ENTREE<br>DRUCKELEMENT (EINGABESEITE) - PRENSOR EN ENTRADA | 227-1423-0 |
|---|---|---|---|

| N | P | C | CODICE | Q.TY | DENOMINAZIONE | DESCRIPTION | DESIGNATION | BEZEICHNUNG | DENOMINACION |
|---|---|---|---|---|---|---|---|---|---|
| | 01.01.1901 -> 01.01.3000 | | | | Note: ----- | | | | |
| | 1 | | 0322730712H | 1.00 | SCHERMO | GUARD | ECRAN | ABDECKUNG | PANTALLA |
| | 2 | | 0322730709C | 1.00 | PROTEZIONE | GUARD | PROTECTION | ABDECKUNG | PROTECCION |
| | 2 | | 0322730739F | 1.00 | SCHERMO | GUARD | ECRAN | ABDECKUNG | PANTALLA |
| | 3 | | 0322730722L | 4.00 | PERNO | PIN | PIVOT | BOLZEN | PERNO |
| | 4 | | 0322730702G | 1.00 | SUPPORTO | SUPPORT | SUPPORT | STUETZE | SOPORTE |
| | 5 | | 0322730708A | 1.00 | SCARPA PRESSATRICE | SHOE | SABOT | DRUCKSCHUH | PLANCHA PRENSORA |
| | 6 | | 0000613114D | 9.00 | BOCCOLA | BUSHING | DOUILLE | BUCHSE | CASQUILLO |
| | 7 | | 0322730721G | 2.00 | BIELLA | CONNECTING ROD | BIELLE | PLEUELSTANGE | BIELA |
| | 8 | | 0510130220F | 1.00 | BATTUTA | STOP | BUTEE | ANSCHLAG | TOPE |
| | 8 | | 0539055800H | 1.00 | BATTUTA | STOP | BUTEE | ANSCHLAG | TOPE |
| | 9 | | 0000301431H | 1.00 | DADO | NUT | ECROU | MUTTER | TUERCA |
| | 9 | | 0000301431H | 1.00 | DADO | NUT | ECROU | MUTTER | TUERCA |
| | 10 | | 0322730719D | 1.00 | STELO | STEM | TIGE | SCHAFT | VASTAGO |
| | 11 | | 0322730718B | 1.00 | SUPPORTO | SUPPORT | SUPPORT | STUETZE | SOPORTE |
| | 12 | | 0316081500A | 1.00 | MOLLA | SPRING | RESSORT | FEDER | RESORTE |
| | 13 | | 0316081600C | 1.00 | MANOPOLA | HAND GRIP | POIGNEE | GRIFF | MANOPLA |
| | 14 | | 0322730706F | 2.00 | PERNO | PIN | PIVOT | BOLZEN | PERNO |
| | 14 | | 0322730728C | 2.00 | PERNO | PIN | PIVOT | BOLZEN | PERNO |
| | 15 | | 0001502627A | 1.00 | CILINDRO PNEUMATICO | PNEUMATIC CYLINDER | CYLINDRE PNEUMATIQUE | PNEUMATIKZYLINDER | CILINDRO NEUMATICO |
| | 16 | | 0000626025A | 1.00 | CERNIERA | HINGE | CHARNIERE | SCHARNIER | BISAGRA |
| | 17 | | 0322730705D | 1.00 | CERNIERA | HINGE | CHARNIERE | SCHARNIER | BISAGRA |
| | 18 | | 0322730704B | 1.00 | PERNO | PIN | PIVOT | BOLZEN | PERNO |
| | 19 | | 0322730613H | 2.00 | PERNO | PIN | PIVOT | BOLZEN | PERNO |
| | 20 | | 0322730732A | 1.00 | BATTUTA | STOP | BUTEE | ANSCHLAG | TOPE |
| | 21 | | 0322730724D | 1.00 | SCARPA PRESSATRICE | SHOE | SABOT | DRUCKSCHUH | PLANCHA PRENSORA |

227-1423

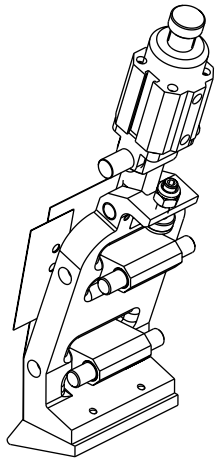

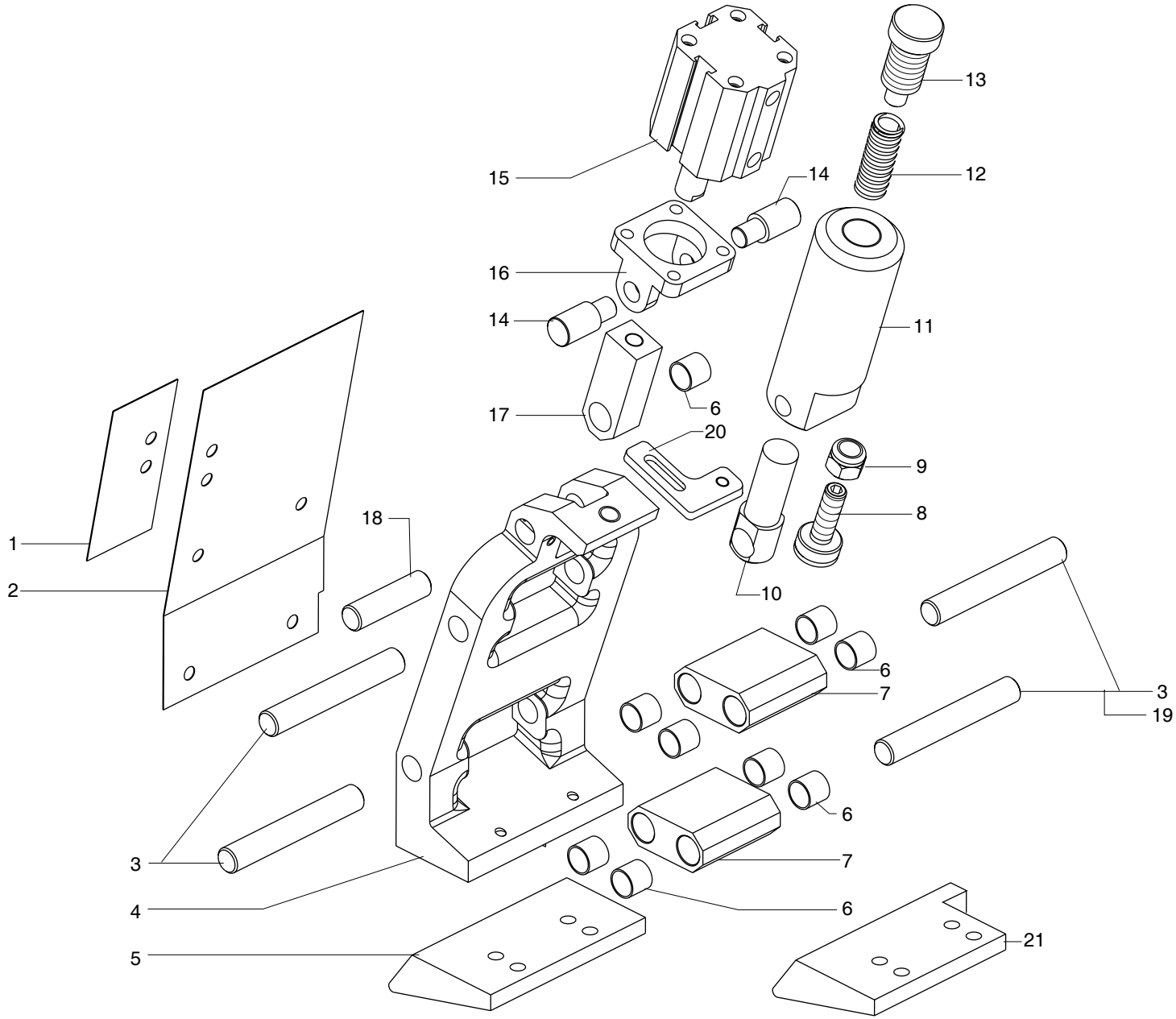


| | | | |
|---|---|---|---|
| scm | SUPERSET XL | PRESSATORE IN ENTRATA (O.S. DX) - (01.01.1901 -> - p.20,06,2007)<br>PRESSER (ENTRY SIDE) - PRESSEUR EN ENTREE<br>DRUCKELEMENT (EINGABESEITE) - PRENSOR EN ENTRADA | 227-1423-0 |

| scm | SUPERSET XL | PRESSATORE IN ENTRATA (O.S. SX) - (p.20,06,2007)<br>PRESSER (ENTRY SIDE) - PRESSEUR EN ENTREE<br>DRUCKELEMENT (EINGABESEITE) - PRENSOR EN ENTRADA | 227-1424-0 |
|---|---|---|---|

| N | P | C | CODICE | Q.TY | DENOMINAZIONE | DESCRIPTION | DESIGNATION | BEZEICHNUNG | DENOMINACION |
|---|---|---|---|---|---|---|---|---|---|
| | 01.01.1901 -> 01.01.3000 | | | | Note: ----- | | | | |
| 1 | | | 0322730715E | 1.00 | PROTEZIONE | GUARD | PROTECTION | ABDECKUNG | PROTECCION |
| 2 | | | 0322730713A | 1.00 | PROTEZIONE | GUARD | PROTECTION | ABDECKUNG | PROTECCION |
| 3 | | | 0322730722L | 4.00 | PERNO | PIN | PIVOT | BOLZEN | PERNO |
| 4 | | | 0322730702G | 1.00 | SUPPORTO | SUPPORT | SUPPORT | STUETZE | SOPORTE |
| 5 | | | 0322730708A | 1.00 | SCARPA PRESSATRICE | SHOE | SABOT | DRUCKSCHUH | PLANCHA PRENSORA |
| 6 | | | 0000613114D | 9.00 | BOCCOLA | BUSHING | DOUILLE | BUCHSE | CASQUILLO |
| 7 | | | 0322730721G | 2.00 | BIELLA | CONNECTING ROD | BIELLE | PLEUELSTANGE | BIELA |
| 8 | | | 0510130220F | 1.00 | BATTUTA | STOP | BUTEE | ANSCHLAG | TOPE |
| 8 | | | 0539055800H | 1.00 | BATTUTA | STOP | BUTEE | ANSCHLAG | TOPE |
| 9 | | | 0000301431H | 1.00 | DADO | NUT | ECROU | MUTTER | TUERCA |
| 9 | | | 0000301431H | 1.00 | DADO | NUT | ECROU | MUTTER | TUERCA |
| 10 | | | 0322730719D | 1.00 | STELO | STEM | TIGE | SCHAFT | VASTAGO |
| 11 | | | 0322730718B | 1.00 | SUPPORTO | SUPPORT | SUPPORT | STUETZE | SOPORTE |
| 12 | | | 0316081500A | 1.00 | MOLLA | SPRING | RESSORT | FEDER | RESORTE |
| 13 | | | 0316081600C | 1.00 | MANOPOLA | HAND GRIP | POIGNEE | GRIFF | MANOPLA |
| 14 | | | 0322730706F | 2.00 | PERNO | PIN | PIVOT | BOLZEN | PERNO |
| 14 | | | 0322730728C | 1.00 | PERNO | PIN | PIVOT | BOLZEN | PERNO |
| 15 | | | 0001502627A | 1.00 | CILINDRO PNEUMATICO | PNEUMATIC CYLINDER | CYLINDRE PNEUMATIQUE | PNEUMATIKZYLINDER | CILINDRO NEUMATICO |
| 16 | | | 0000626025A | 1.00 | CERNIERA | HINGE | CHARNIERE | SCHARNIER | BISAGRA |
| 17 | | | 0322730705D | 1.00 | CERNIERA | HINGE | CHARNIERE | SCHARNIER | BISAGRA |
| 18 | | | 0322730704B | 1.00 | PERNO | PIN | PIVOT | BOLZEN | PERNO |
| 19 | | | 0322730714C | 1.00 | SCARPA PRESSATRICE | SHOE | SABOT | DRUCKSCHUH | PLANCHA PRENSORA |
| 20 | | | 0322730613H | 2.00 | PERNO | PIN | PIVOT | BOLZEN | PERNO |

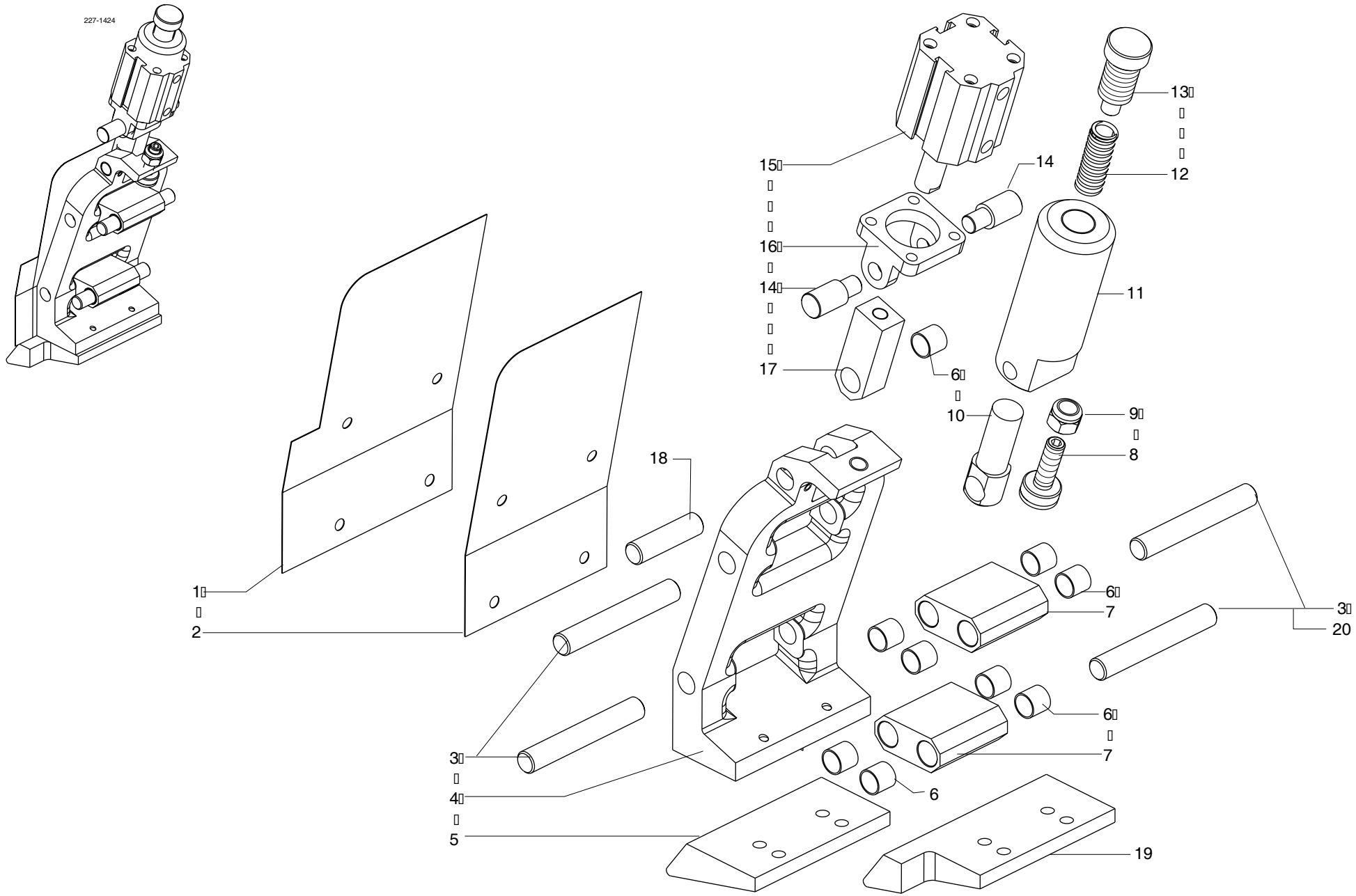


| | | | |
|---|---|---|---|
| scm | **SUPERSET XL** | **PRESSATORE IN ENTRATA (O.S. SX) - (01.01.1901 -> - p.20,06,2007)**<br>**PRESSER (ENTRY SIDE) - PRESSEUR EN ENTREE**<br>**DRUCKELEMENT (EINGABESEITE) - PRENSOR EN ENTRADA** | **227-1424-0** |

| N | P | C | CODICE | Q.TY | DENOMINAZIONE | DESCRIPTION | DESIGNATION | BEZEICHNUNG | DENOMINACION |
|---|---|---|---|---|---|---|---|---|---|
| | 01.01.1901 -> 01.01.3000 | | | | Note: ----- | | | | |
| | 1 | | 0711136303F | 1.00 | GIUNTO | JOINT | JOINT | KUPPLUNG | JUNTA |
| | 2 | | 0000644268H | 1.00 | ANELLO SEEGER | CIRCLIP | CIRCLIP | SEEGERRING | SEEGER |
| | 3 | | 0316031000H | 1.00 | DISTANZIALE | SPACER | ENTRETOISE | DISTANZSTUECK | DISTANCIADOR |
| | 4 | | 0000644043A | 1.00 | ANELLO SEEGER | CIRCLIP | CIRCLIP | SEEGERRING | SEEGER |
| | 5 | | 0000606100E | 1.00 | CUSCINETTO | BEARING | ROULEMENT | LAGER | COJINETE |
| | 6 | | 0310190116E | 1.00 | VITE SENZA FINE | WORM | VIS SANS FIN | SCHNECKE | TORNILO SIN FIN |
| | 6 | | 0311136434E | 1.00 | VITE SENZA FINE | WORM | VIS SANS FIN | SCHNECKE | TORNILO SIN FIN |
| | 7 | | 0316030500H | 1.00 | BOCCOLA | BUSHING | DOUILLE | BUCHSE | CASQUILLO |
| | 8 | | 0310130604G | 1.00 | SCATOLA DI RINVIO | TRANSFER CASE | BOITE | VORGELEGEKASTEN | CAJA |
| | 9 | | 0000613034D | 4.00 | RALLA | WASHER | CRAPAUDINE | SCHEIBE | RANGUA |
| | 10 | | 0000613033B | 2.00 | GABBIA A RULLINI | ROLLER CAGE | CAGE A ROULEAUX | WALZENKAEFIG | COJINETE |
| | 11 | | 0319430904G | 1.00 | CORONA DENTATA | GEAR WHEEL | COURONNE DENTEE | ZAHNRAD | RUEDA DENTADA |
| | 12 | | 0000645045F | 1.00 | LINGUETTA | FEATHER KEY | LANGUETTE | FEDERKEIL | LINGUETA |
| | 13 | | 0311132516E | 1.00 | VITE | SCREW | VIS | SCHRAUBE | TORNILLO |
| | 13 | | 0322730615C | 1.00 | VITE | SCREW | VIS | SCHRAUBE | TORNILLO |
| | 13 | | 0711132522F | 1.00 | VITE+CHIOC.RIC | SCREW+LEAD NUT | VIS+ECROU | SCHNECKE+MUTTER | TORN+TUER A DIBUJO |

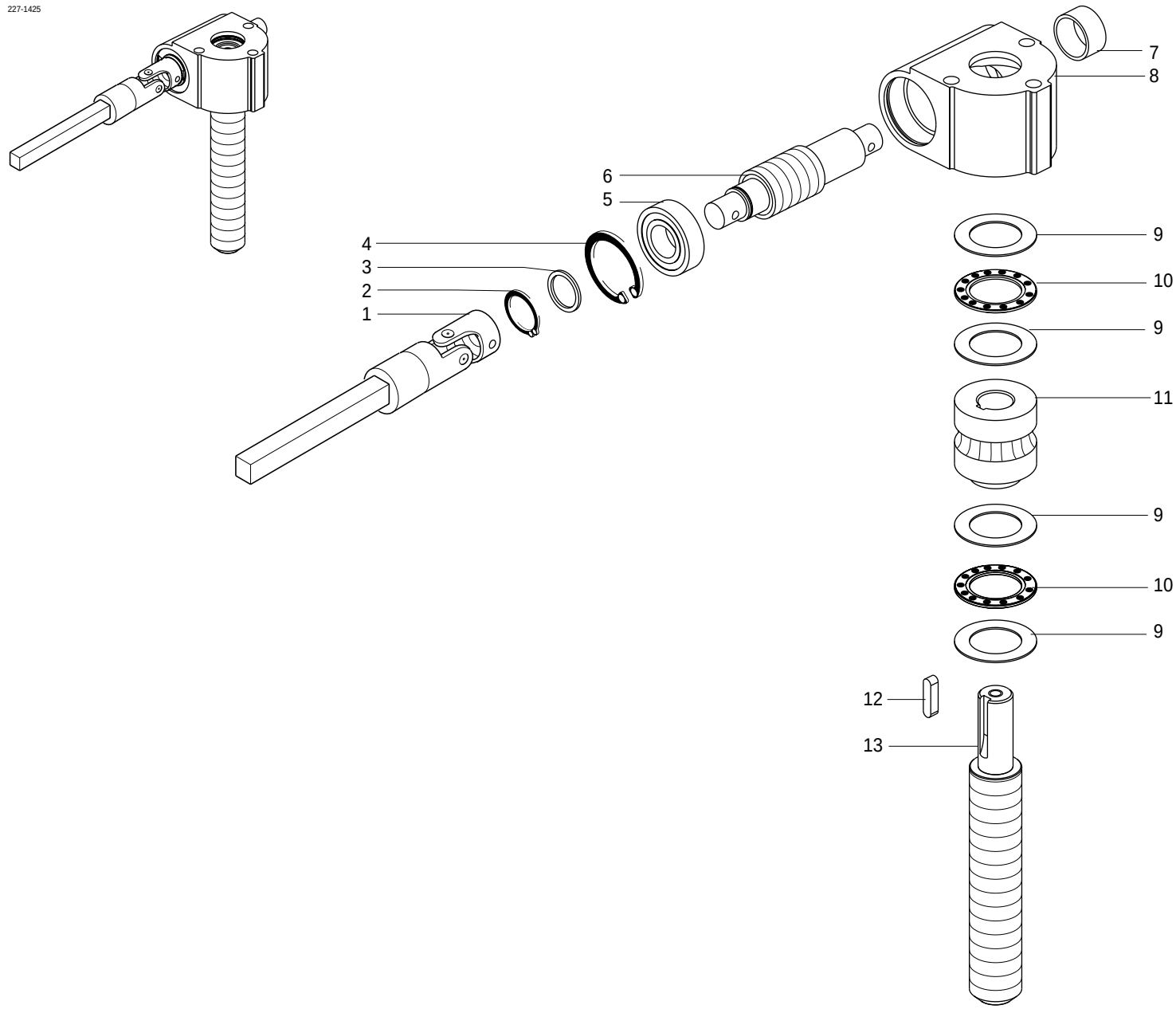


| | | | |
|---|---|---|---|
| scm | SUPERSET XL | POSIZIONAMENTO VERTICALE MANUALE - (01.01.1901 ->  - p.20,06,2007)<br>MANUAL VERTICAL ADJUSTMENT - REGLAGE VERTICAL MANUEL<br>MANUELLE VERTIKALVERSTELLUNG - UBICACION VERTICAL MANUAL | 227-1425-0 |

| N | P | C | CODICE | Q.TY | DENOMINAZIONE | DESCRIPTION | DESIGNATION | BEZEICHNUNG | DENOMINACION |
|---|---|---|---|---|---|---|---|---|---|
| | 01.01.1901 -> 01.01.3000 | | | | Note: 2822730591D | | | | |
| | 1 | | 0000635039B | 1.00 | INDICATORE NUMERICO | INDICATOR | INDICATEUR | ANZEIGER | INDICADOR |
| | 1 | | 0000635055E | 1.00 | INDICATORE NUMERICO | INDICATOR | INDICATEUR | ANZEIGER | INDICADOR NUMERICO |
| | 1 | | 0000635139D | 1.00 | INDICATORE NUMERICO | INDICATOR | INDICATEUR | ANZEIGER | INDICADOR NUMERICO |
| | 1 | | 0000635143B | 1.00 | INDICATORE NUMERICO | INDICATOR | INDICATEUR | ANZEIGER | INDICADOR NUMERICO |
| | 1 | | 0766580007D | 1.00 | INDICATORE NUMERICO LIKA | INDICATOR | INDICATEUR | ANZEIGER | INDICADOR NUMERICO |
| | 2 | | 0522730170B | 1.00 | FLANGIA | FLANGE | FLASQUE | FLANSCH | BRIDA |
| | 3 | | 0310031018D | 1.00 | PERNO | PIN | PIVOT | BOLZEN | PERNO |
| | 4 | | 0000613045G | 2.00 | RALLA | WASHER | CRAPAUDINE | SCHEIBE | RANGUA |
| | 5 | | 0000644268H | 2.00 | ANELLO SEEGER | CIRCLIP | CIRCLIP | SEEGERRING | SEEGER |
| | 6 | | 0322775006E | 1.00 | TARGA | PLATE | PLAQUE | SCHILD | TARJETA |
| | 7 | | 0322730171L | 1.00 | BOCCOLA | BUSHING | DOUILLE | BUCHSE | CASQUILLO |
| | 8 | | 0710030208E | 1.00 | GIUNTO CARDANICO | UNIVERSAL JOINT | JOINT A CARDAN | KARDANGELENK | ARTICULACION CARDANICA |
| | 8 | | 0722730735F | 1.00 | GIUNTO CARDANICO | UNIVERSAL JOINT | JOINT A CARDAN | KARDANGELENK | ARTICULACION CARDANICA |
| | 8 | | 0722740133A | 1.00 | GIUNTO | JOINT | JOINT | KUPPLUNG | JUNTA |

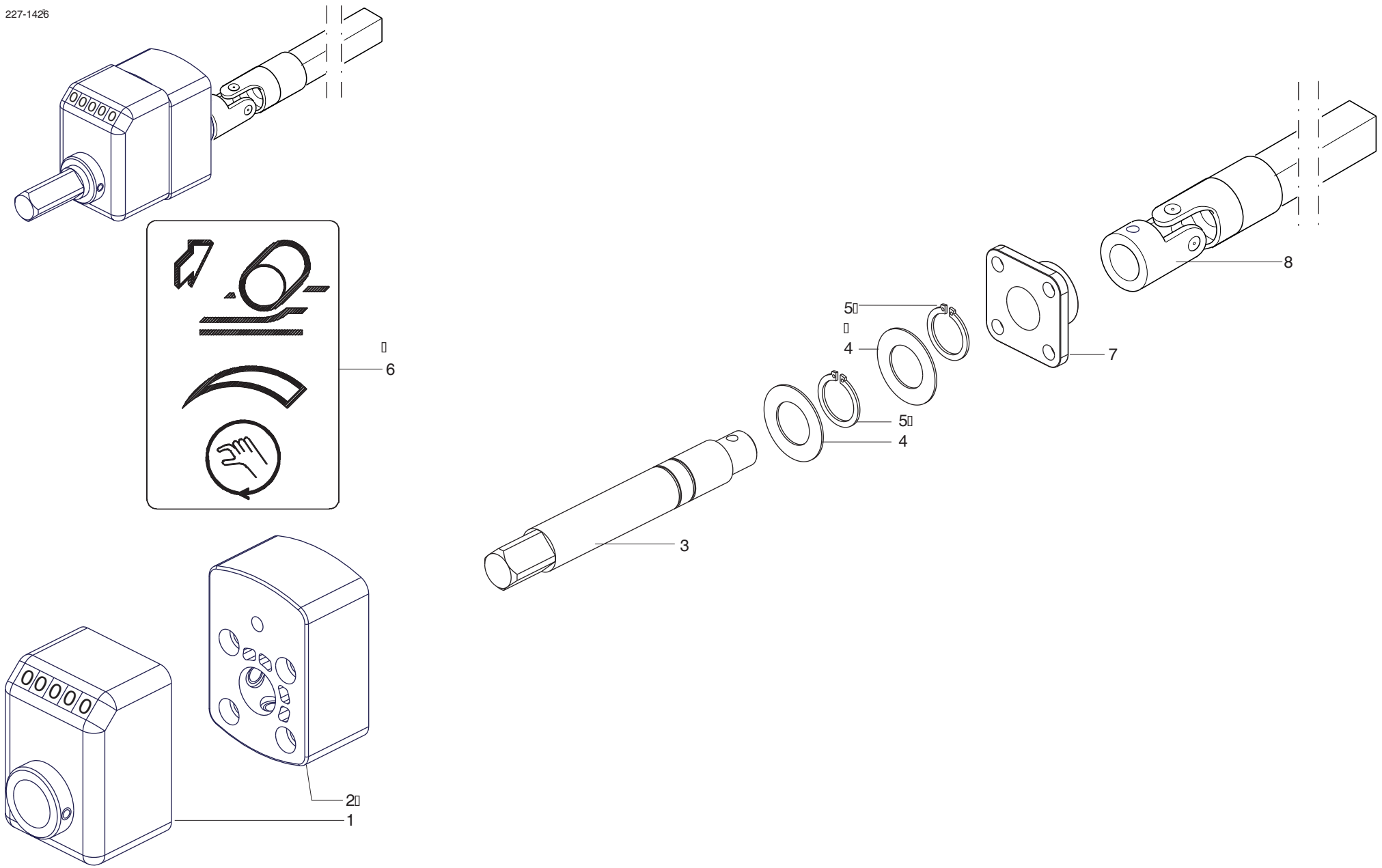


| | | | |
|---|---|---|---|
| scm | SUPERSET XL | POSIZIONAMENTO ORIZZONTALE MANUALE - (01.01.1901 -> - p.20,06,2007)<br>MANUAL HORIZONTAL ADJUSTMENT - REGLAGE HORIZONTAL MANUEL<br>MANUELLE HORIZONTALVERSTELLUNG - UBICACION HORIZONTAL MANUAL | 227-1426-0 |

| scm | SUPERSET XL | POSIZIONAMENTO VERTICALE MANUALE - (p.20,06,2007)<br>MANUAL VERTICAL ADJUSTMENT - REGLAGE VERTICAL MANUEL<br>MANUELLE VERTIKALVERSTELLUNG - UBICACION VERTICAL MANUAL | 227-1427-0 |
|---|---|---|---|

| N | P | C | CODICE | Q.TY | DENOMINAZIONE | DESCRIPTION | DESIGNATION | BEZEICHNUNG | DENOMINACION |
|---|---|---|---|---|---|---|---|---|---|
| | 01.01.1901 -> 01.01.3000 | | | | Note: 2822730591D | | | | |
| | 1 | | 0000635055E | 1.00 | INDICATORE NUMERICO | INDICATOR | INDICATEUR | ANZEIGER | INDICADOR NUMERICO |
| | 1 | | 0000635143B | 1.00 | INDICATORE NUMERICO | INDICATOR | INDICATEUR | ANZEIGER | INDICADOR NUMERICO |
| | 1 | | 0766580007D | 1.00 | INDICATORE NUMERICO LIKA | INDICATOR | INDICATEUR | ANZEIGER | INDICADOR NUMERICO |
| | 2 | | 0522730170B | 1.00 | FLANGIA | FLANGE | FLASQUE | FLANSCH | BRIDA |
| | 3 | | 0310031018D | 1.00 | PERNO | PIN | PIVOT | BOLZEN | PERNO |
| | 4 | | 0000613045G | 2.00 | RALLA | WASHER | CRAPAUDINE | SCHEIBE | RANGUA |
| | 5 | | 0000644268H | 2.00 | ANELLO SEEGER | CIRCLIP | CIRCLIP | SEEGERRING | SEEGER |
| | 6 | | 0322775005C | 1.00 | TARGA | PLATE | PLAQUE | SCHILD | TARJETA |
| | 7 | | 0322730171L | 1.00 | BOCCOLA | BUSHING | DOUILLE | BUCHSE | CASQUILLO |
| | 8 | | 0710030208E | 1.00 | GIUNTO CARDANICO | UNIVERSAL JOINT | JOINT A CARDAN | KARDANGELENK | ARTICULACION CARDANICA |
| | 8 | | 0722740133A | 1.00 | GIUNTO | JOINT | JOINT | KUPPLUNG | JUNTA |
| | 9 | | 0322775027L | 1.00 | TARGA | RATING PLATE | PLAQUE | SCHILD | TARJETA |
| | 10 | | 0000635321L | 1.00 | INDICATORE NUMERICO | INDICATOR | INDICATEUR | ANZEIGER | INDICADOR NUMERICO |
| | 10 | | 0000635324F | 1.00 | INDICATORE NUMERICO | INDICATOR | INDICATEUR | ANZEIGER | INDICADOR NUMERICO |

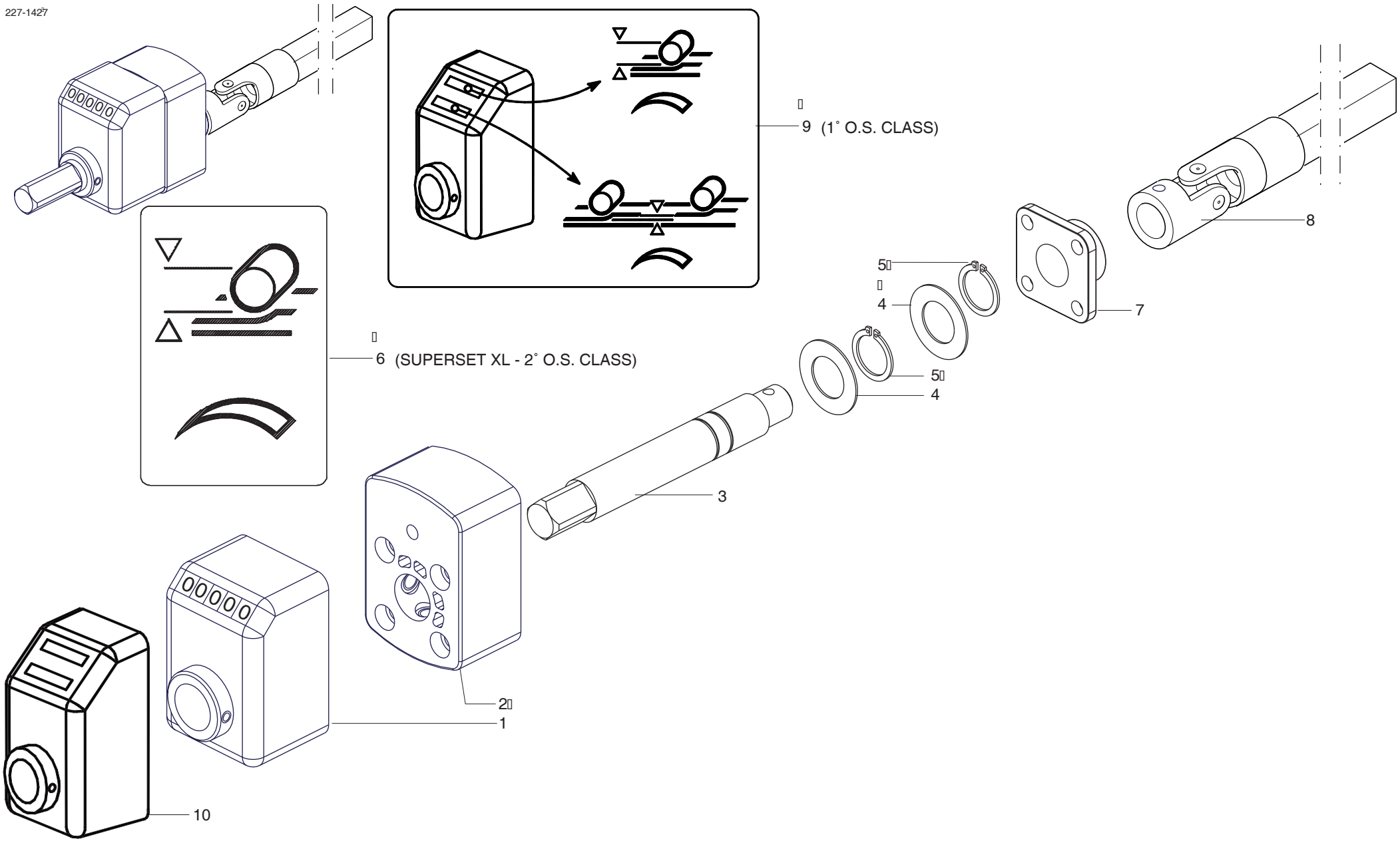


| | | | |
|---|---|---|---|
| scm | SUPERSET XL | POSIZIONAMENTO VERTICALE MANUALE - (01.01.1901 -> - p.20,06,2007)<br>MANUAL VERTICAL ADJUSTMENT - REGLAGE VERTICAL MANUEL<br>MANUELLE VERTIKALVERSTELLUNG - UBICACION VERTICAL MANUAL | 227-1427-0 |

| scm | SUPERSET XL | PRESSATORE IN USCITA (comp.31) - (p.20,06,2007)<br>OUTLET HOLD-DOWN UNIT - PRESSEUR EN SORTIE<br>AUSGANGSDRUCKELEMENT - PRENSOR EN SALIDA | 227-1428-0 |
|---|---|---|---|

| N | P | C | CODICE | Q.TY | DENOMINAZIONE | DESCRIPTION | DESIGNATION | BEZEICHNUNG | DENOMINACION |
|---|---|---|---|---|---|---|---|---|---|
| | 01.01.1901 -> 01.01.3000 | | | | Note: 2822730550G | | | | |
| | 1 | | 0319012600E | 1.00 | POMOLO | BALL GRIP | POIGNEE | KUGELGRIFF | POMO |
| | 2 | | 0322730511B | 1.00 | VITE | SCREW | VIS | SCHRAUBE | TORNILLO |
| | 3 | | 0321960416G | 1.00 | MOLLA | SPRING | RESSORT | FEDER | RESORTE |
| | 4 | | 0322730604L | 1.00 | PIASTRA | PLATE | PLAQUE | PLATTE | PLANCHA |
| | 5 | | 0322730605B | 1.00 | LARDONE | GIB | CONTRE-FER | STELLEISTE | CHAVETA |
| | 6 | | 0000616033E | 2.00 | INGRASSATORE (NIPPLO) | GREASE NIPPLE | NIPPLE | SCHMIERNIPPEL | NIPLE ENGRASADOR |
| | 7 | | 0322730725F | 1.00 | SUPPORTO | SUPPORT | SUPPORT | STUETZE | SOPORTE |
| | 8 | | 0322730603G | 1.00 | PRESSATORE | PRESSER | PRESSEUR | DRUCKELEMENT | PRENSADOR |
| | 9 | | 0310130203F | 1.00 | LARDONE | GIB | CONTRE-FER | STELLEISTE | CHAVETA |
| | 10 | | 0311136419D | 1.00 | SCARPA PRESSATRICE | SHOE | SABOT | DRUCKSCHUH | PLANCHA PRENSORA |
| | 10 | | 0322730607F | 1.00 | SCARPA PRESSATORE | SHOE | SABOT | DRUCKSCHUH | PLANCHA PRENSORA |
| | 10 | | 0322730907C | 1.00 | SCARPA PRESSATRICE | SHOE | SABOT | DRUCKSCHUH | PLANCHA PRENSORA |
| | 11 | | 0522730632C | 1.00 | SCARPA PRESSATORE | SHOE | SABOT | DRUCKSCHUH | PLANCHA PRENSORA |
| | 12 | | 0316332636C | 1.00 | PASTIGLIA | PAD | PASTILLE | BELAG | PASTILLA |
| | 13 | | 0000613045G | 2.00 | RALLA | WASHER | CRAPAUDINE | SCHEIBE | RANGUA |
| | 14 | | 0322730512D | 1.00 | BUSSOLA | BUSH | DOUILLE | BUCHSE | BUJE |
| | 15 | | 0000644268H | 1.00 | ANELLO SEEGER | CIRCLIP | CIRCLIP | SEEGERRING | SEEGER |
| | 16 | | 0000635239F | 1.00 | INDICATORE NUMERICO | INDICATOR | INDICATEUR | ANZEIGER | INDICADOR NUMERICO |
| | 16 | | 0000635322B | 1.00 | INDICATORE NUMERICO | INDICATOR | INDICATEUR | ANZEIGER | INDICADOR NUMERICO |
| | 17 | | 0522730506F | 1.00 | SUPPORTO | SUPPORT | SUPPORT | STUETZE | SOPORTE |

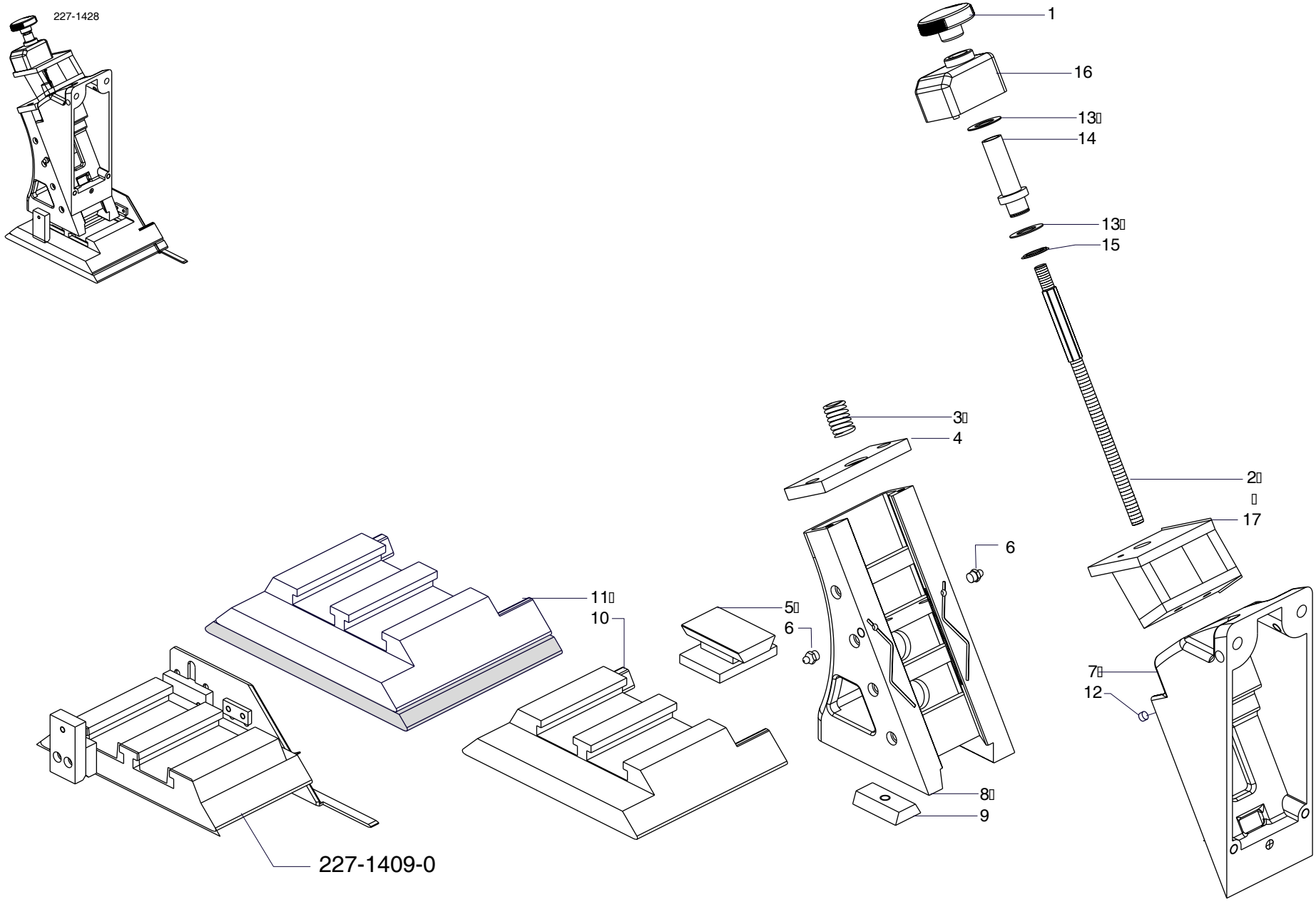


| | | | |
|---|---|---|---|
| scm | SUPERSET XL | PRESSATORE IN USCITA (comp.31) - (01.01.1901 -> - p.20,06,2007)<br>OUTLET HOLD-DOWN UNIT - PRESSEUR EN SORTIE<br>AUSGANGSDRUCKELEMENT - PRENSOR EN SALIDA | 227-1428-0 |

| N | P | C | CODICE | Q.TY | DENOMINAZIONE | DESCRIPTION | DESIGNATION | BEZEICHNUNG | DENOMINACION |
|---|---|---|---|---|---|---|---|---|---|
| | 01.01.1901 -> 01.01.3000 | | | | Note: 3122730400E | | | | |
| | 0 | | 1111111111F | 0.00 | INDICE | POINTER | INDICATEUR | ZEIGER | INDICE |
| | 1 | | 0319013512L | 0.00 | POMELLO | BALL GRIP | POIGNEE | KUGELGRIFF | POMO |
| | 2 | | 0310830314L | 1.00 | BOCCOLA | BUSHING | DOUILLE | BUCHSE | CASQUILLO |
| | 3 | | 2711135400C | 1.00 | BLOCCAGGIO | LOCKING DEVICE | BLOCAGE | SPERRE | BLOQUEO |
| | 3 | | 2711135410D | 1.00 | BLOCCAGGIO | LOCKING DEVICE | BLOCAGE | SPERRE | BLOQUEO |

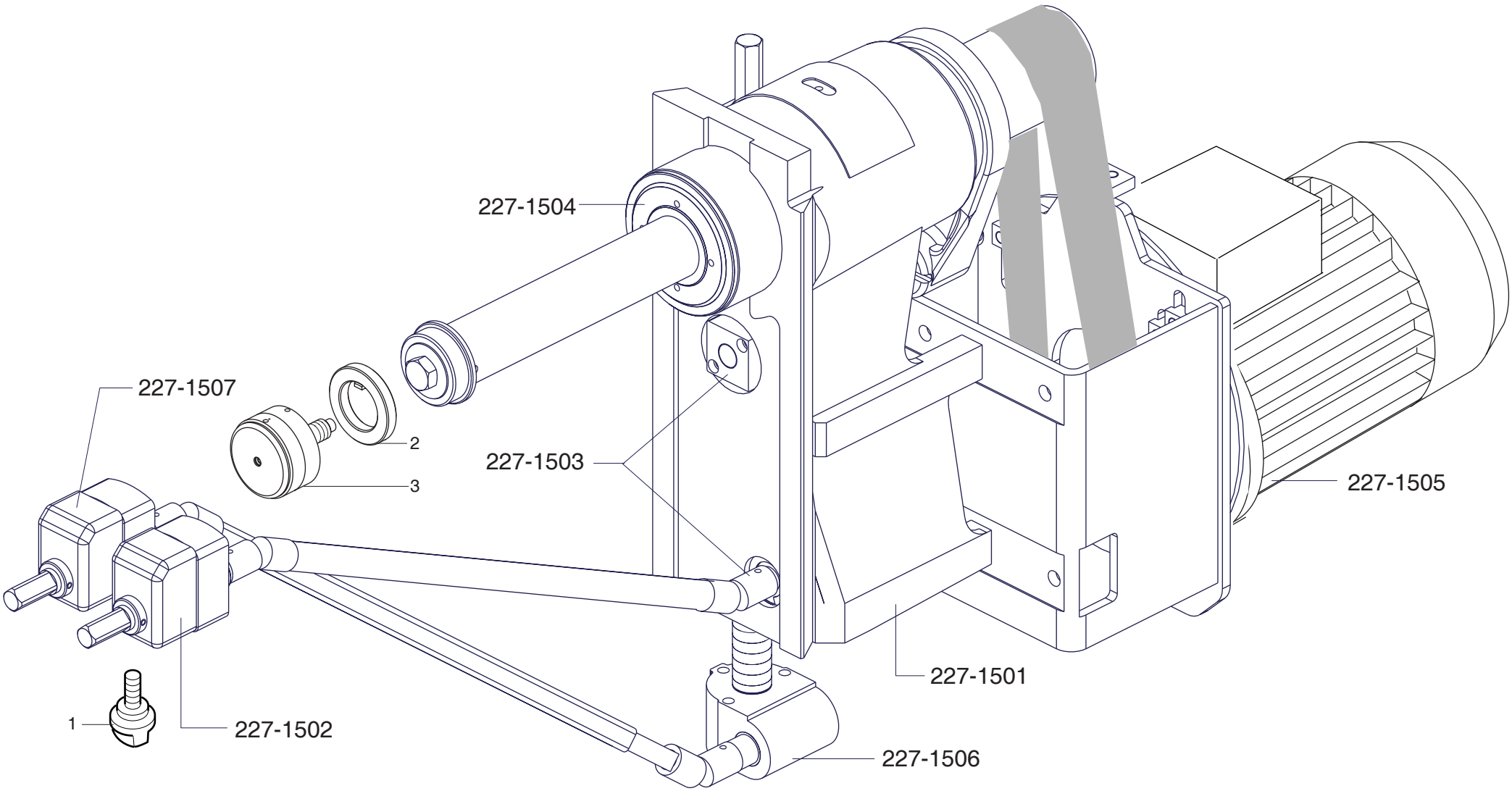


| | | | |
|---|---|---|---|
| scm | SUPERSET XL | ALBERO ORIZZONTALE INFERIORE - (01.01.1901 -> - p.20,06,2007)<br>BOTTON HORIZONTAL SPINDLE - ARBRE HORIZONTAL INFERIEUR<br>UNTERE HORIZONTALWELLE - EJE HORIZONTAL INFERIOR | 227-1500-0 |

| N | P | C | CODICE | Q.TY | DENOMINAZIONE | DESCRIPTION | DESIGNATION | BEZEICHNUNG | DENOMINACION |
|---|---|---|---|---|---|---|---|---|---|
| | 01.01.1901 -> 01.01.3000 | | | | Note: 2822730420B | | | | |
| | 1 | | 0319433851G | 1.00 | VITE BLOCCAGGIO | SCREW | VIS | SCHRAUBE | TORNILLO |
| | 2 | | 0319433800L | 1.00 | SLITTA | SLIDE | COULISSE | SCHLITTEN | CORREDERA |
| | 3 | | 0319441002F | 1.00 | MADREVITE | NUT SCREW | VIS-MERE | MUTTERGEWINDE | TUERCA |
| | 4 | | 0521930031G | 1.00 | CARTER | COVER | CARTER | DECKEL | CARTER |

227-1101

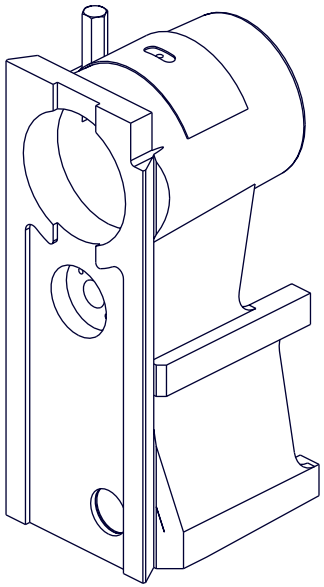

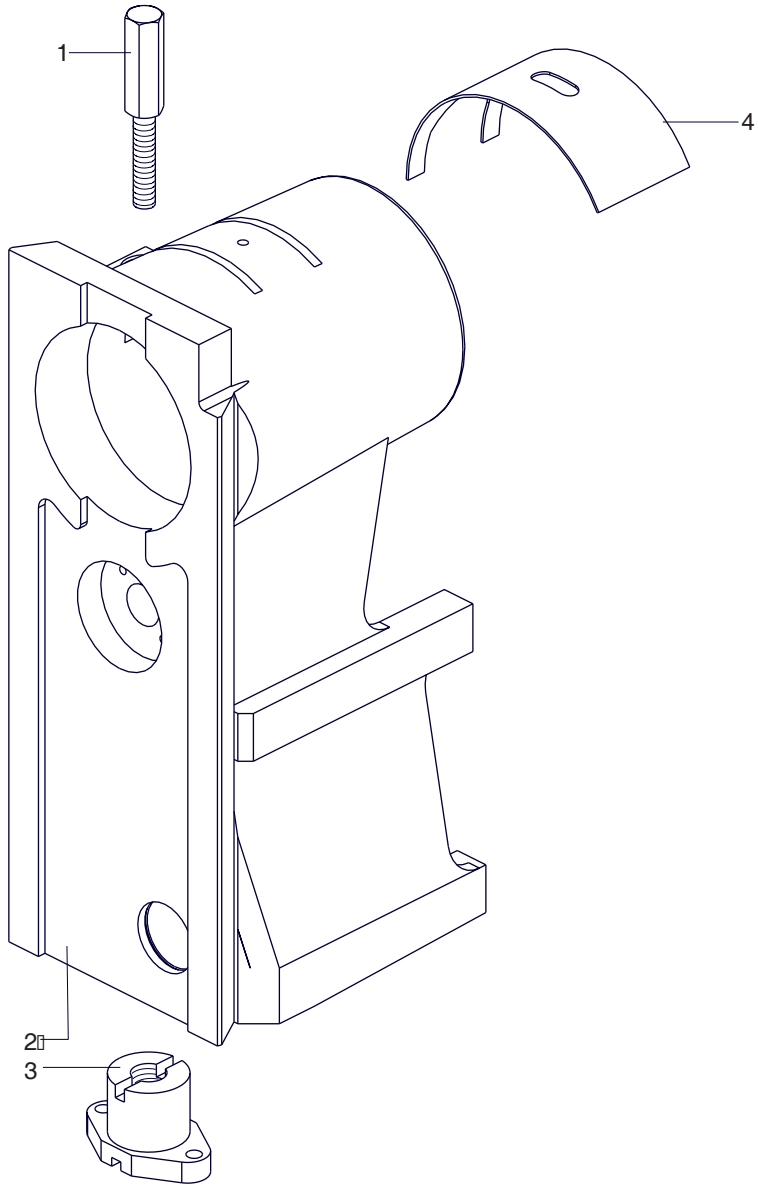


| | | | |
|---|---|---|---|
| scm | SUPERSET XL | SLITTA - (01.01.1901 -> - p.20,06,2007)<br>SLIDE - GLISSIERE<br>SCHLITTEN - TRINEO | 227-1501-0 |

| scm | SUPERSET XL | POSIZIONAMENTO ORIZZONTALE ASSE CONTINUO - (p.20,06,2007)<br>HORIZONTAL ADJUSTING (CONTINUOUS AXIS) - REGLAGE HORIZONTAL AXE CONTINU<br>HORIZONTALVERSTELLUNG MIT KONT. ACHSE - UBICACION HORIZONTAL A EJE CONTINUO | 227-1501-X |
|---|---|---|---|

| N | P | C | CODICE | Q.TY | DENOMINAZIONE | DESCRIPTION | DESIGNATION | BEZEICHNUNG | DENOMINACION |
|---|---|---|---|---|---|---|---|---|---|
| | 01.01.1901 -> 01.01.3000 | | | | Note: 2822732060L | | | | |
| | 1 | | 0319434402F | 1.00 | CARTER | COVER | CARTER | GEHAEUSE | CARTER |
| | 2 | | 0739736141H | 1.00 | ENCODER | ENCODER | ENCODER | ENCODER | ENCODER |
| | 2 | | 0739736145G | 1.00 | ASS.ENCODER 300IMP/G | ASS.ENCODER 300IMP/G | ASS.ENCODER 300IMP/G | ASS.ENCODER 300IMP/G | ASS.ENCODER 300IMP/G |
| | 3 | | 0001331046A | 1.00 | MOTORE TRIF. FRENO C.C. | 3-PH. MOTOR D.C. BRAKE | MOTEUR 3-PH . FREIN C.C | 3-PH. MOTOR G.S. BREMSE | MOT. TRIFAS. FR. C.C. |
| | 4 | | 0321930124A | 2.00 | DISTANZIALE | SPACER | ENTRETOISE | DISTANZSTUECK | DISTANCIADOR |
| | 5 | | 0321930112E | 1.00 | SUPPORTO | SUPPORT | SUPPORT | STUETZE | SOPORTE |
| | 6 | | 0000639207C | 1.00 | RIDUTTORE | GEAR UNIT | REDUCTEUR | GETRIEBE | REDUCTOR |
| | 7 | | 0319433851G | 1.00 | VITE BLOCCAGGIO | SCREW | VIS | SCHRAUBE | TORNILLO |
| | 8 | | 0722730303L | 1.00 | GIUNTO | JOINT | JOINT | KUPPLUNG | JUNTA |
| | 9 | | 0000613045G | 4.00 | RALLA | WASHER | CRAPAUDINE | SCHEIBE | RANGUA |
| | 10 | | 0000613041H | 2.00 | GABBIA A RULLINI | ROLLER CAGE | CAGE A ROULEAUX | WALZENKAEFIG | COJINETE |
| | 11 | | 0317521504D | 2.00 | ANELLO | RING | BAGUE | RING | ANILLO |
| | 12 | | 0000301853D | 1.00 | GHIERA | COLLAR | EMBOUT | NUTMUTTER | COLLAR |
| | 13 | | 0321930129B | 1.00 | FLANGIA | FLANGE | FLASQUE | FLANSCH | BRIDA |
| | 14 | | 0000645059F | 1.00 | LINGUETTA | FEATHER KEY | LANGUETTE | FEDERKEIL | LINGUETA |
| | 15 | | 0322730658D | 1.00 | BARRA | BAR | BARRE | STANGE | BARRA |
| | 16 | | 0000301363D | 1.00 | DADO | NUT | ECROU | MUTTER | TUERCA |
| | 17 | | 0322731024L | 1.00 | PIASTRA | PLATE | PLAQUE | PLATTE | PLANCHA |
| | 18 | | 0001905110A | 2.00 | RACCORDO | FITTING | RACCORD | ANSCHLUSS | CONEXION |
| | 19 | | 0000309307E | 1.00 | VITE | SCREW | VIS | SCHRAUBE | TORNILLO |
| | 20 | | 0001308100F | 1.00 | SUPPORTO | SUPPORT | SUPPORT | STUETZE | SOPORTE |
| | 21 | | 0001308846L | 1.00 | FINECORSA PER CILINDRO | LIMIT SWITCH | FIN DE COURSE | ENDSCHALTER | FIN CARRERA |
| | 22 | | 0002038165L | 1.00 | CILINDRO PNEUMATICO | PNEUMATIC CYLINDER | CYLINDRE PNEUMATIQUE | PNEUMATIKZYLINDER | CILINDRO NEUMATICO |
| | 23 | | 0322731029A | 1.00 | ATTACCO | CONNECTING ROD | BARRE FIXATION | STAB | CONEXION |
| | 24 | | 0322731023G | 1.00 | BLOCCAGGIO | LOCKING DEVICE | BLOCAGE | SPERRE | BLOQUEO |
| | 25 | | 0311132712A | 1.00 | PERNO | PIN | PIVOT | BOLZEN | PERNO |
| | 26 | | 0311130105A | 1.00 | SLITTA | SLIDE | COULISSE | SCHLITTEN | CORREDERA |
| | 26 | | 0322730314D | 1.00 | SLITTA | SLIDE | COULISSE | SCHLITTEN | CORREDERA |
| | 27 | | 0319441002F | 1.00 | MADREVITE | NUT SCREW | VIS-MERE | MUTTERGEWINDE | TUERCA |
| | 28 | | 0521930031G | 1.00 | CARTER | COVER | CARTER | DECKEL | CARTER |
| | 29 | | 0322730312L | 1.00 | SUPPORTO | SUPPORT | SUPPORT | STUETZE | SOPORTE |
| | 30 | | 0331919070B | 1.00 | GUIDA PORTACAMME | CAM HOLDER GUIDE | GUIDE PORTE-CAMES | NOCKENHALTER | GUIA PORTA EXC. |
| | 31 | | 0001347321C | 1.00 | CAMMA TCX-10-34 | CAM | CAME ACTIONNEMENT | TREIBNOCKEN | EXCENT.ACC. |
| | 32 | | 0001347322E | 2.00 | CAMMA TCX-00-24 | CAM | CAME | NOCKEN | EXCENTRICO |
| | 33 | | 0322371108C | 1.00 | SOFFIATORE | BLOWER | SOUFFLEUR | BLAESER | SOPLADOR |
| | 34 | | 0000305338F | 2.00 | ROSETTA | WASHER | RONDELLE | SCHEIBE | ARANDELA |
| | 35 | | 0322730313B | 1.00 | PIASTRA | PLATE | PLAQUE | PLATTE | PLANCHA |
| | 36 | | 0001308055A | 1.00 | FINECORSA | MICROSWITCH | FIN DE COURSE | MIKROSCHALTER | FIN CARRERA |
| | 37 | | 0001344082B | 1.00 | ELETTROVALVOLA V.110 | SOLENOID VALVE | ELECTROVALVE | MAGNETVENTIL | ELECTROVALVULA |

| N | P | C | CODICE | Q.TY | DENOMINAZIONE | DESCRIPTION | DESIGNATION | BEZEICHNUNG | DENOMINACION |
|---|---|---|---|---|---|---|---|---|---|
| | 38 | | 0000613375G | 2.00 | RALLA | WASHER | CRAPAUDINE | SCHEIBE | RANGUA |
| | 39 | | 0322710122B | 1.00 | STAFFA | BRACKET | BRIDE | BUEGEL | ABRAZADERA |
| | 40 | | 0322730315F | 1.00 | PIATTO | PLATE | PLAT | PLATTE | PLATO |
| | 41 | | 0322730318C | 1.00 | SUPPORTO MOTORE | SUPPORT | SUPPORT | STUETZE | SOPORTE MOTOR |

2271501x

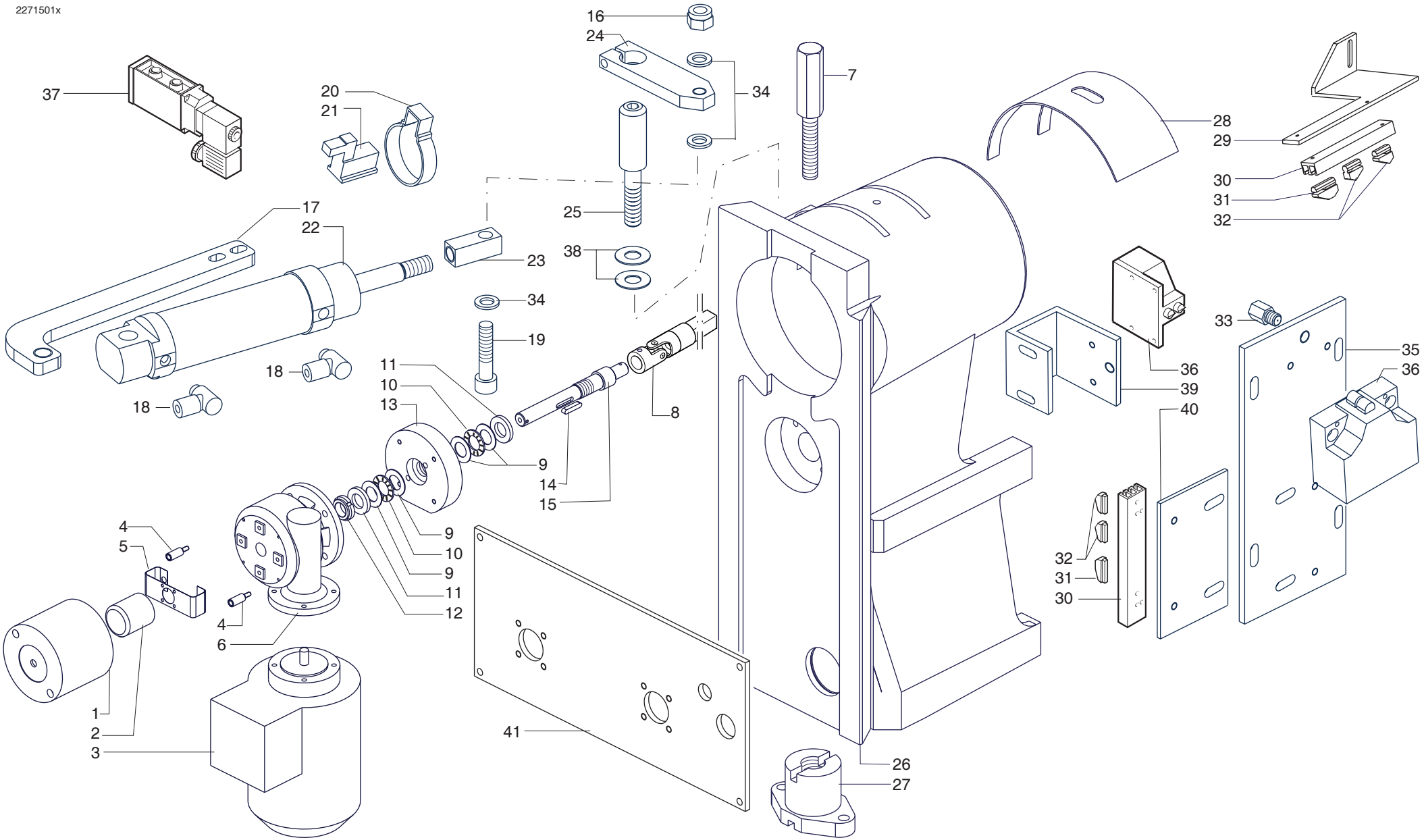


| | | | |
|---|---|---|---|
| scm | SUPERSET XL | POSIZIONAMENTO ORIZZONTALE ASSE CONTINUO - (01.01.1901 -> - p.20,06,2007)<br>HORIZONTAL ADJUSTING (CONTINUOUS AXIS) - REGLAGE HORIZONTAL AXE CONTINU<br>HORIZONTALVERSTELLUNG MIT KONT. ACHSE - UBICACION HORIZONTAL A EJE CONTINUO | 227-1501-X |

| N | P | C | CODICE | Q.TY | DENOMINAZIONE | DESCRIPTION | DESIGNATION | BEZEICHNUNG | DENOMINACION |
|---|---|---|---|---|---|---|---|---|---|
| | 01.01.1901 -> 01.01.3000 | | | | Note: 2822730485L | | | | |
| | 1 | | 0000635039B | 1.00 | INDICATORE NUMERICO | INDICATOR | INDICATEUR | ANZEIGER | INDICADOR |
| | 1 | | 0000635270A | 1.00 | INDICATORE NUMERICO | INDICATOR | INDICATEUR | ANZEIGER | INDICADOR NUMERICO |
| | 1 | | 0766580007D | 1.00 | INDICATORE NUMERICO LIKA | INDICATOR | INDICATEUR | ANZEIGER | INDICADOR NUMERICO |
| | 2 | | 0522730170B | 1.00 | FLANGIA | FLANGE | FLASQUE | FLANSCH | BRIDA |
| | 3 | | 0000613041H | 2.00 | GABBIA A RULLINI | ROLLER CAGE | CAGE A ROULEAUX | WALZENKAEFIG | COJINETE |
| | 4 | | 0316330020C | 1.00 | RONDELLA | WASHER | RONDELLE | SCHEIBE | ARANDELA |
| | 5 | | 0000613045G | 4.00 | RALLA | WASHER | CRAPAUDINE | SCHEIBE | RANGUA |
| | 6 | | 0322730171L | 1.00 | BOCCOLA | BUSHING | DOUILLE | BUCHSE | CASQUILLO |
| | 7 | | 0322730625D | 1.00 | BARRA | BAR | BARRE | STANGE | BARRA |
| | 8 | | 0722730303L | 1.00 | GIUNTO | JOINT | JOINT | KUPPLUNG | JUNTA |
| | 9 | | 0322775013L | 1.00 | TARGA | PLATE | PLAQUE | SCHILD | TARJETA |
| | 10 | | 0319013512L | 1.00 | POMELLO | BALL GRIP | POIGNEE | KUGELGRIFF | POMO |

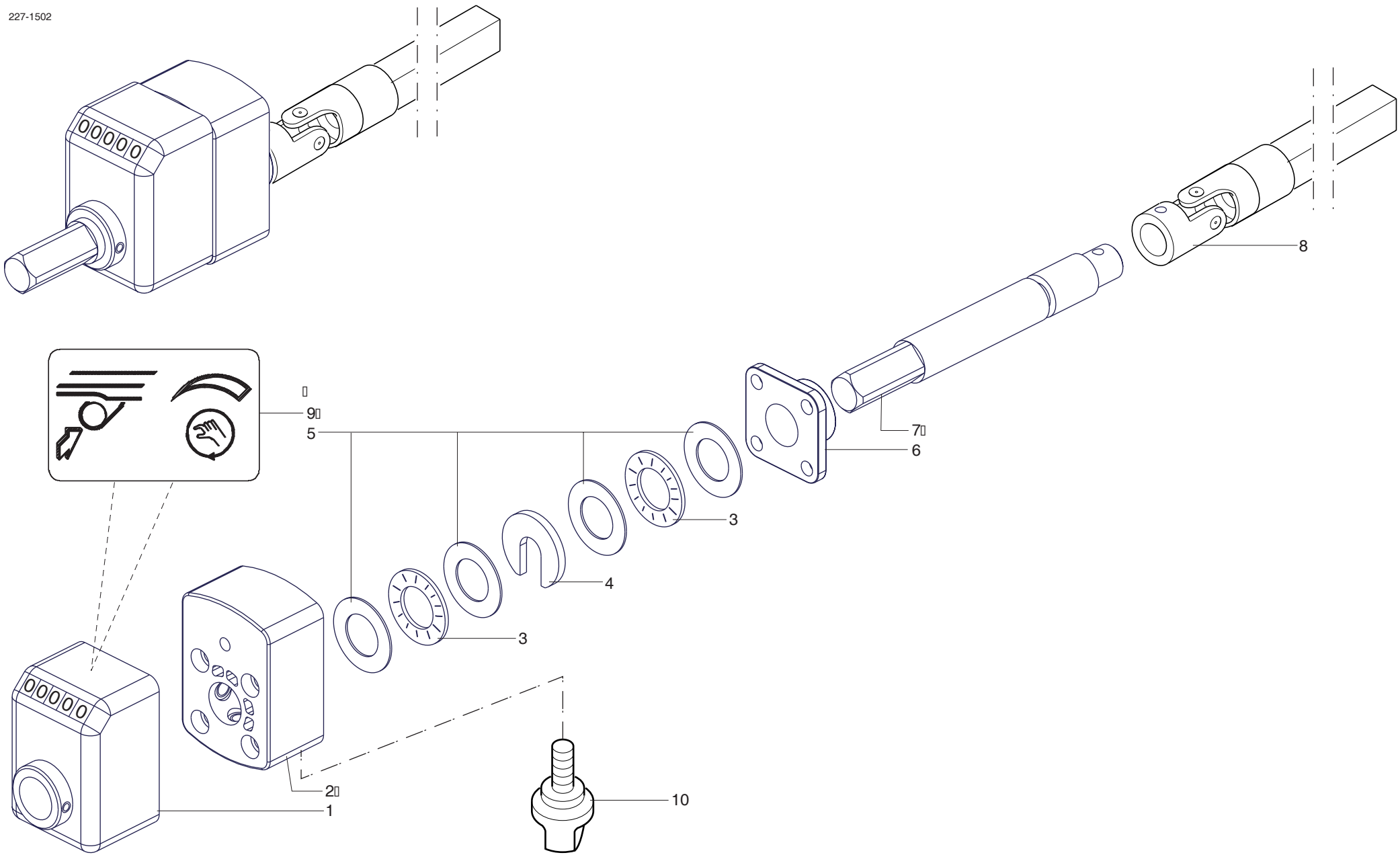


| scm | SUPERSET XL | POSIZIONAMENTO ORIZZONTALE MANUALE - (01.01.1901 -> - p.20,06,2007)<br>MANUAL HORIZONTAL ADJUSTMENT - REGLAGE HORIZONTAL MANUEL<br>MANUELLE HORIZONTALVERSTELLUNG - UBICACION HORIZONTAL MANUAL | 227-1502-0 |
|---|---|---|---|

| N | P | C | CODICE | Q.TY | DENOMINAZIONE | DESCRIPTION | DESIGNATION | BEZEICHNUNG | DENOMINACION |
|---|---|---|---|---|---|---|---|---|---|
| | 01.01.1901 -> 01.01.3000 | | | | Note: 2822730435D | | | | |
| | 1 | | 1416330018C | 1.00 | FLANGIA | FLANGE | FLASQUE | FLANSCH | ANILLO |
| | 2 | | 0000613045G | 4.00 | RALLA | WASHER | CRAPAUDINE | SCHEIBE | RANGUA |
| | 3 | | 0000613041H | 2.00 | GABBIA A RULLINI | ROLLER CAGE | CAGE A ROULEAUX | WALZENKAEFIG | COJINETE |
| | 4 | | 0316330020C | 1.00 | RONDELLA | WASHER | RONDELLE | SCHEIBE | ARANDELA |
| | 5 | | 0000645184A | 2.00 | LINGUETTA | FEATHER KEY | LANGUETTE | FEDERKEIL | LINGUETA |
| | 6 | | 0319430407C | 2.00 | CORONA DENTATA | SPROCKET | PIGNON | RITZEL | RUEDA DENTADA |
| | 7 | | 0322730306G | 1.00 | VITE | SCREW | VIS | SCHRAUBE | TORNILLO |
| | 7 | | 0322730319E | 1.00 | VITE | SCREW | VIS | SCHRAUBE | TORNILLO |
| | 8 | | 0000602055E | 1.00 | CATENA | CHAIN | CHAINE | KETTE | CADENA |
| | 9 | | 0319430409G | 1.00 | PERNO | PIN | PIVOT | STIFT | PERNO |
| | 10 | | 0000644043A | 2.00 | ANELLO SEEGER | CIRCLIP | CIRCLIP | SEEGERRING | SEEGER |
| | 11 | | 0000606100E | 2.00 | CUSCINETTO | BEARING | ROULEMENT | LAGER | COJINETE |
| | 12 | | 0711136303F | 1.00 | GIUNTO | JOINT | JOINT | KUPPLUNG | JUNTA |
| | 12 | | 0722740132H | 1.00 | GIUNTO | JOINT | JOINT | KUPPLUNG | JUNTA |
| | 13 | | 0319430404F | 1.00 | DISTANZIALE | SPACER | ENTRETOISE | DISTANZSTUECK | DISTANCIADOR |
| | 14 | | 0300928001B | 2.00 | BOCCOLA | BUSHING | DOUILLE | BUCHSE | CASQUILLO |

227-1503

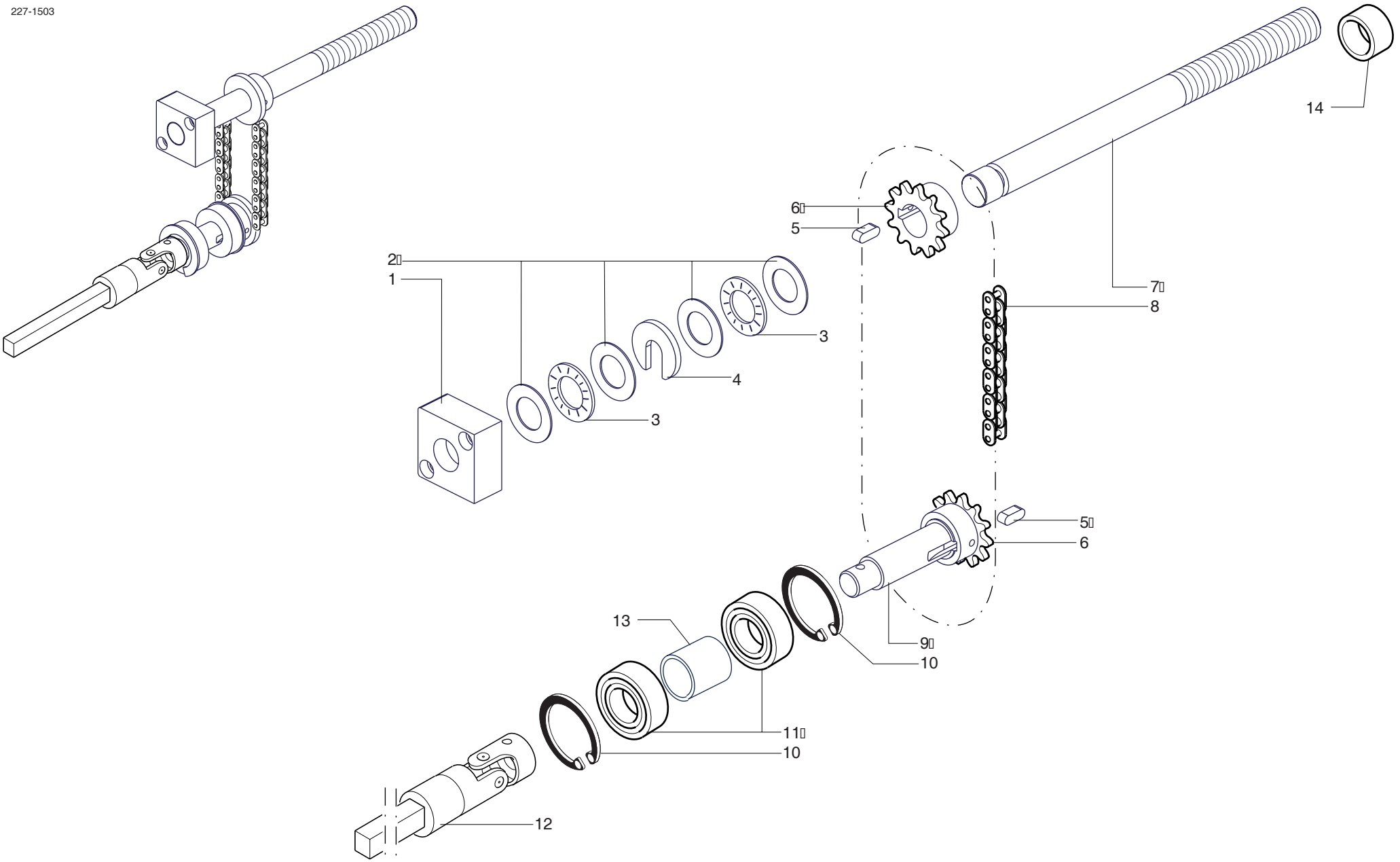


| | | | |
|---|---|---|---|
| scm | SUPERSET XL | POSIZIONAMENTO ORIZZONTALE MANUALE - (01.01.1901 -> - p.20,06,2007)<br>MANUAL HORIZONTAL ADJUSTMENT - REGLAGE HORIZONTAL MANUEL<br>MANUELLE HORIZONTALVERSTELLUNG - UBICACION HORIZONTAL MANUAL | 227-1503-0 |

| N | P | C | CODICE | Q.TY | DENOMINAZIONE | DESCRIPTION | DESIGNATION | BEZEICHNUNG | DENOMINACION |
|---|---|---|---|---|---|---|---|---|---|
| | 01.01.1901 -> 01.01.3000 | | | | Note: 2822730415B | | | | |
| | 1 | | 0000308565A | 1.00 | VITE | SCREW | VIS | SCHRAUBE | TORNILLO |
| | 1 | | 0000308566C | 1.00 | VITE | SCREW | VIS | SCHRAUBE | TORNILLO |
| | 2 | | 0327430300B | 1.00 | RONDELLA | WASHER | RONDELLE | SCHEIBE | ARANDELA |
| | 3 | | 0316036400C | 1.00 | ANELLO CON DENTATURA D=40 | RING | BAGUE | RING | ANILLO |
| | 3 | | 2739030101B | 1.00 | ANELLO CON DENTATURA | RING | BAGUE | RING | ANILLO |
| | 4 | | 0319433349C | 1.00 | GHIERA | RING NUT | EMBOUT | NUTMUTTER | COLLAR |
| | 4 | | 0319433350D | 1.00 | GHIERA | RING NUT | EMBOUT | NUTMUTTER | COLLAR |
| | 5 | | 0319433348A | 1.00 | ANELLO | RING | BAGUE | RING | ANILLO |
| | 6 | | 0000606139H | 1.00 | CUSCINETTO | BEARING | ROULEMENT | LAGER | COJINETE |
| | 6 | | 0000606170C | 2.00 | CUSCINETTO | BEARING | ROULEMENT | LAGER | COJINETE |
| | 6 | | 0000609068A | 1.00 | CUSCINETTO | BEARING | ROULEMENT | LAGER | COJINETE |
| | 6 | | 0766547299B | 1.00 | CUSCINETTO | BEARING | ROULEMENT | LAGER | COJINETE |
| | 7 | | 0319435704H | 1.00 | ALBERO TOUPIE | SPINDLE | ARBRE | FRAESSPINDEL | EJE |
| | 7 | | 0319435710A | 1.00 | ALBERO TOUPIE | SPINDLE | ARBRE | FRAESSPINDEL | EJE |
| | 7 | | 0319435713G | 1.00 | ALBERO TOUPIE | SPINDLE | ARBRE | FRAESSPINDEL | EJE |
| | 7 | | 0319435714L | 1.00 | ALBERO TOUPIE | SPINDLE | ARBRE | FRAESSPINDEL | EJE |
| | 7 | | 0319435715B | 1.00 | ALBERO TOUPIE | SPINDLE | ARBRE | FRAESSPINDEL | EJE |
| | 7 | | 0319435716D | 1.00 | ALBERO TOUPIE | SPINDLE | ARBRE | FRAESSPINDEL | EJE |
| | 7 | | 0319435782C | 1.00 | ALBERO TOUPIE | SPINDLE | ARBRE | FRAESSPINDEL | EJE |
| | 7 | | 0322712000E | 1.00 | ALBERO TOUPIE | SPINDLE | ARBRE | FRAESSPINDEL | EJE |
| | 7 | | 0322712001G | 1.00 | ALBERO TOUPIE | SPINDLE | ARBRE | FRAESSPINDEL | EJE |
| | 7 | | 0322712002L | 1.00 | ALBERO TOUPIE | SPINDLE | ARBRE | FRAESSPINDEL | EJE |
| | 8 | | 0319433371H | 1.00 | CILINDRO | CYLINDER | CYLINDRE | ZYLINDER | CILINDRO |
| | 8 | | 0319433373C | 1.00 | CILINDRO | CYLINDER | CYLINDRE | ZYLINDER | CILINDRO |
| | 8 | | 0322711002H | 1.00 | CILINDRO | CYLINDER | CYLINDRE | ZYLINDER | CILINDRO |
| | 9 | | 0000645169L | 1.00 | LINGUETTA | FEATHER KEY | LANGUETTE | FEDERKEIL | LINGUETA |
| | 10 | | 0000617759G | 6.00 | MOLLA TAZZA | SPRING | RESSORT | TELLERFEDER | RESORTE |
| | 11 | | 0319435570C | 1.00 | DISTANZIALE | SPACER | ENTRETOISE | DISTANZSTUECK | DISTANCIADOR |
| | 12 | | 0000606165C | 1.00 | CUSCINETTO | BEARING | ROULEMENT | LAGER | COJINETE |
| | 12 | | 0000608161F | 1.00 | CUSC.ALTA P. | HIGH PRECISION BEARING | ROULEMENT HAUTE PRECISION | HOCHPRAEZISIONSLAGER | COJ.ALTA PREC. |
| | 12 | | 0766547297G | 1.00 | CUSCINETTO (COPPIA) | BEARING | ROULEMENT | LAGER | COJINETE |
| | 12 | | 0766547298L | 1.00 | CUSCINETTO | BEARING | ROULEMENT | LAGER | COJINETE |
| | 13 | | 0319431141H | 1.00 | PULEGGIA CONDOTTA | PULLEY | POULIE | RIEMENSCHEIBE | POLEA |
| | 13 | | 0321930803B | 1.00 | PULEGGIA | PULLEY | POULIE | RIEMENSCHEIBE | POLEA |
| | 14 | | 0311130200B | 1.00 | MADREVITE | NUT SCREW | VIS-MERE | MUTTERGEWINDE | TUERCA |
| | 14 | | 0311133220G | 1.00 | PIASTRA | PLATE | PLAQUE | PLATTE | PLANCHA |
| | 14 | | 0311133510C | 1.00 | MADREVITE | NUT SCREW | VIS-MERE | MUTTERGEWINDE | TUERCA |
| | 14 | | 0322730302H | 1.00 | MADREVITE | NUT SCREW | VIS-MERE | MUTTERGEWINDE | TUERCA |
| | 15 | | 0319431142A | 1.00 | RONDELLA | WASHER | RONDELLE | SCHEIBE | ARANDELA |

| N | P | C | CODICE | Q.TY | DENOMINAZIONE | DESCRIPTION | DESIGNATION | BEZEICHNUNG | DENOMINACION |
|---|---|---|---|---|---|---|---|---|---|
| | 16 | | 0000308440E | 1.00 | VITE | SCREW | VIS | SCHRAUBE | TORNILLO |
| | 17 | | 0321930708A | 1.00 | PULEGGIA | PULLEY | POULIE | RIEMENSCHEIBE | POLEA |
| | 18 | | 0319431151L | 1.00 | BOCCOLA | BUSHING | DOUILLE | BUCHSE | CASQUILLO |
| | 19 | | 0322730311G | 1.00 | BLOCCAGGIO | LOCKING DEVICE | BLOCAGE | SPERRE | BLOQUEO |
| | 19 | | 0322730316H | 1.00 | BLOCCAGGIO | LOCKING DEVICE | BLOCAGE | SPERRE | BLOQUEO |
| | 20 | | 0310130420F | 1.00 | PARAPOLVERE | DUST COVER | PARE-POUSSIERE | STAUBDECKEL | PLACA RETENCION POLVO |
| | 21 | | 0310130421H | 1.00 | GUARNIZIONE | GASKET | GARNITURE | DICHTUNG | JUNTA |
| | 22 | | 0319433356G | 1.00 | ANELLO | RING | BAGUE | RING | ANILLO |
| | 23 | | 0519433357D | 2.00 | INGRASSATORE (NIPPLO) | GREASE NIPPLE | NIPPLE | SCHMIERNIPPEL | NIPLE ENGRASADOR |

227-1504

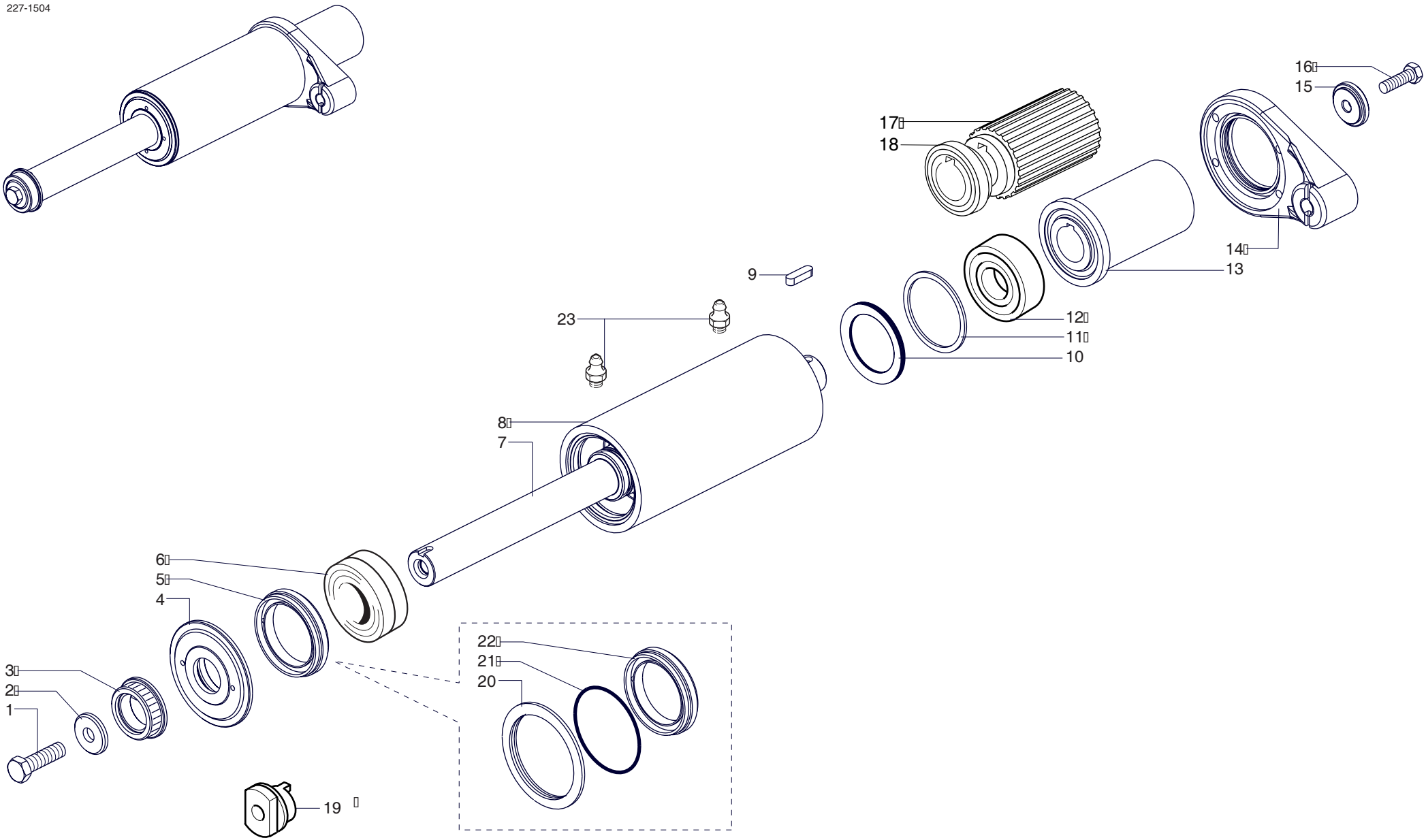


| scm | SUPERSET XL | ALBERO PIALLA - (01.01.1901 -> - p.20,06,2007)<br>CUTTERBLOCK - ARBRE PORTE-COUTEAUX<br>MESSERWELLE - EJE CEPILLO | 227-1504-0 |
|---|---|---|---|

| N | P | C | CODICE | Q.TY | DENOMINAZIONE | DESCRIPTION | DESIGNATION | BEZEICHNUNG | DENOMINACION |
|---|---|---|---|---|---|---|---|---|---|
| 01.01.1901 -> 01.01.3000 | | | | | Note: 2822730430C | | | | |
| 1 | | | 0001320284B | 1.00 | MOTORE TRIF. | 3-PH. MOTOR | 3-PH. MOTEUR | 3-PH. MOTOR | MOT.TRIFAS. |
| 1 | | | 0001321019B | 1.00 | MOTORE TRIF. | 3.PH MOTOR | 3 PH. MOTEUR | 3-PH MOTOR | MOT. TRIFAS |
| 1 | | | 0001321024B | 1.00 | MOTORE TRIF. | 3-PH. MOTOR | 3-PH. MOTEUR | 3-PH. MOTOR | MOT.TRIFAS. |
| 1 | | | 0001321029C | 1.00 | MOTORE TRIF. | 3.PH MOTOR | 3 PH. MOTEUR | 3-PH MOTOR | MOT. TRIFAS |
| 1 | | | 0001321045F | 1.00 | MOTORE TRIF. | 3.PH MOTOR | 3 PH. MOTEUR | 3-PH MOTOR | MOT. TRIFAS |
| 1 | | | 0001321046H | 1.00 | MOTORE TRIF. | 3-PH. MOTOR | 3-PH. MOTEUR | 3-PH. MOTOR | MOT.TRIFAS. |
| 1 | | | 0001321047A | 1.00 | MOTORE TRIF. | 3.PH MOTOR | 3 PH. MOTEUR | 3-PH MOTOR | MOT. TRIFAS |
| 1 | | | 0001321059F | 1.00 | MOTORE TRIF. | 3.PH MOTOR | 3 PH. MOTEUR | 3-PH MOTOR | MOT. TRIFAS |
| 1 | | | 0001321067C | 1.00 | MOTORE TRIF. | 3-PH. MOTOR | 3-PH. MOTEUR | 3-PH. MOTOR | MOT.TRIFAS. |
| 1 | | | 0001321071A | 1.00 | MOTORE TRIF. | 3.PH MOTOR | 3 PH. MOTEUR | 3-PH MOTOR | MOT. TRIFAS |
| 1 | | | 0001321080L | 1.00 | MOTORE TRIF. | 3.PH MOTOR | 3 PH. MOTEUR | 3-PH MOTOR | MOT. TRIFAS |
| 1 | | | 0001321126H | 1.00 | MOTORE TRIF. | 3.PH MOTOR | 3 PH. MOTEUR | 3-PH MOTOR | MOT. TRIFAS |
| 1 | | | 0001321127A | 1.00 | MOTORE TRIF. | 3.PH MOTOR | 3 PH. MOTEUR | 3-PH MOTOR | MOT. TRIFAS |
| 1 | | | 0001321141L | 1.00 | MOTORE TRIF. | 3.PH MOTOR | 3 PH. MOTEUR | 3-PH MOTOR | MOT. TRIFAS |
| 1 | | | 0001321142B | 1.00 | MOTORE TRIF. | 3.PH MOTOR | 3 PH. MOTEUR | 3-PH MOTOR | MOT. TRIFAS |
| 1 | | | 0001321143D | 1.00 | MOTORE TRIF. | 3.PH MOTOR | 3 PH. MOTEUR | 3-PH MOTOR | MOT. TRIFAS |
| 1 | | | 0001321167E | 1.00 | MOTORE TRIF. | 3.PH. MOTOR | 3 PH. MOTEUR | 3-DREIPHASENMOTOR | MOT. TRIFAS |
| 1 | | | 0001330091D | 1.00 | MOTORE TRIF. | 3-PH. MOTOR | 3-PH. MOTEUR | 3-PH. MOTOR | MOT.TRIFAS. |
| 1 | | | 0001330125G | 1.00 | MOTORE TRIF. | 3-PH. MOTOR | 3-PH. MOTEUR | 3-PH. MOTOR | MOT.TRIFAS. |
| 1 | | | 0001330126L | 1.00 | MOTORE TRIF. | 3-PH. MOTOR | 3-PH. MOTEUR | 3-PH. MOTOR | MOT.TRIFAS. |
| 1 | | | 0001330127B | 1.00 | MOTORE TRIF. | 3-PH. MOTOR | 3-PH. MOTEUR | 3-PH. MOTOR | MOT.TRIFAS. |
| 1 | | | 0001330228F | 1.00 | MOTORE TRIF. | 3-PH. MOTOR | 3-PH. MOTEUR | 3-PH. MOTOR | MOT.TRIFAS. |
| 1 | | | 0001331011F | 1.00 | MOTORE TRIF. FRENO C.C. | 3-PH. MOTOR D.C. BRAKE | MOTEUR 3-PH . FREIN C.C | 3-PH. MOTOR G.S. BREMSE | MOT. TRIFAS. FR. C.C. |
| 1 | | | 0001331012H | 1.00 | MOTORE TRIF. FRENO C.C. | 3-PH. MOTOR D.C. BRAKE | 3-PH. MOTEUR FREIN C.C. | 3-PH. MOTOR G.S. BREMSE | MOT.TRIFAS.FR.C.C. |
| 1 | | | 0001331013A | 1.00 | MOTORE TRIF. FRENO C.C. | 3-PH. MOTOR D.C. BRAKE | MOTEUR 3-PH . FREIN C.C | 3-PH. MOTOR G.S. BREMSE | MOT. TRIFAS. FR. C.C. |
| 1 | | | 0001331014C | 1.00 | MOTORE TRIF. FRENO C.C. | 3-PH. MOTOR D.C. BRAKE | MOTEUR 3-PH . FREIN C.C | 3-PH. MOTOR G.S. BREMSE | MOT. TRIFAS. FR. C.C. |
| 1 | | | 0001331058F | 1.00 | MOTORE TRIF. FRENO C.C. | 3-PH. MOTOR C.C. BRAKE | 3-PH. MOTEUR FREIN C.C. | 3-PH. MOTOR C.C. BREMSE | MOT.TRIFAS.FR.C.C. |
| 1 | | | 0001331065A | 1.00 | MOTORE TRIF. FRENO C.C. | 3-PH. MOTOR D.C. BRAKE | MOTEUR 3-PH . FREIN C.C | 3-PH. MOTOR G.S. BREMSE | MOT. TRIFAS. FR. C.C. |
| 1 | | | 0001331066C | 1.00 | MOTORE TRIF. FRENO C.C. | 3-PH. MOTOR D.C. BRAKE | MOTEUR 3-PH . FREIN C.C | 3-PH. MOTOR G.S. BREMSE | MOT. TRIFAS. FR. C.C. |
| 1 | | | 0001331067E | 1.00 | MOTORE TRIF. FRENO C.C. | 3-PH. MOTOR D.C. BRAKE | MOTEUR 3-PH . FREIN C.C | 3-PH. MOTOR G.S. BREMSE | MOT. TRIFAS. FR. C.C. |
| 1 | | | 0001331080B | 1.00 | MOTORE TRIF. FRENO C.C. | 3-PH. MOTOR D.C. BRAKE | MOTEUR 3-PH . FREIN C.C | 3-PH. MOTOR G.S. BREMSE | MOT. TRIFAS. FR. C.C. |
| 1 | | | 0001331108C | 1.00 | MOTORE TRIF. FRENO C.C. | 3-PH. MOTOR C.C. BRAKE | 3-PH. MOTEUR FREIN C.C. | 3-PH. MOTOR C.C. BREMSE | MOT.TRIFAS.FR.C.C. |
| 1 | | | 0001331119F | 1.00 | MOTORE TRIF. FRENO C.C. | 3-PH. MOTOR D.C. BRAKE | MOTEUR 3-PH . FREIN C.C | 3-PH. MOTOR G.S. BREMSE | MOT. TRIFAS. FR. C.C. |
| 1 | | | 0001331120G | 1.00 | MOTORE TRIF. FRENO C.C. | 3-PH. MOTOR D.C. BRAKE | MOTEUR 3-PH . FREIN C.C | 3-PH. MOTOR G.S. BREMSE | MOT. TRIFAS. FR. C.C. |
| 1 | | | 0001331121L | 1.00 | MOTORE TRIF. FRENO C.C. | 3-PH. MOTOR D.C. BRAKE | MOTEUR 3-PH . FREIN C.C | 3-PH. MOTOR G.S. BREMSE | MOT. TRIFAS. FR. C.C. |
| 1 | | | 0001331208E | 1.00 | MOTORE TRIF. FRENO C.C. | 3-PH. MOTOR D.C. BRAKE | MOTEUR 3-PH . FREIN C.C | 3-PH. MOTOR G.S. BREMSE | MOT. TRIFAS. FR. C.C. |
| 1 | | | 0001331610G | 1.00 | MOTORE TRIF. FRENO C.C. | 3-PH. MOTOR D.C. BRAKE | MOTEUR 3-PH . FREIN C.C | 3-PH. MOTOR G.S. BREMSE | MOT. TRIFAS. FR. C.C. |
| 1 | | | 0001331664B | 1.00 | MOTORE TRIF. FRENO C.C. | 3-PH. MOTOR D.C. BRAKE | MOTEUR 3-PH . FREIN C.C | 3-PH. MOTOR G.S. BREMSE | MOT. TRIFAS. FR. C.C. |
| 1 | | | 0001331665D | 1.00 | MOTORE TRIF. FRENO C.C. | 3-PH. MOTOR D.C. BRAKE | MOTEUR 3-PH . FREIN C.C | 3-PH. MOTOR G.S. BREMSE | MOT. TRIFAS. FR. C.C. |

| N | P | C | CODICE | Q.TY | DENOMINAZIONE | DESCRIPTION | DESIGNATION | BEZEICHNUNG | DENOMINACION |
|---|---|---|---|---|---|---|---|---|---|
| | 1 | | 0001331666F | 1.00 | MOTORE TRIF. FRENO C.C. | 3-PH. MOTOR D.C. BRAKE | MOTEUR 3-PH . FREIN C.C | 3-PH. MOTOR G.S. BREMSE | MOT. TRIFAS. FR. C.C. |
| | 1 | | 0001331768C | 1.00 | MOTORE TRIF. | 3-PH. MOTOR | 3-PH. MOTEUR | 3-PH. MOTOR | MOT.TRIFAS. |
| | 1 | | 0001336015A | 1.00 | MOTORE TRIF. | 3.PH MOTOR | 3 PH. MOTEUR | 3-PH MOTOR | MOT. TRIFAS |
| | 1 | | 0001336018G | 1.00 | MOTORE TRIF. | 3.PH MOTOR | 3 PH. MOTEUR | 3-PH MOTOR | MOT. TRIFAS |
| | 1 | | 0001336054C | 1.00 | MOTORE TRIF. | 3.PH MOTOR | 3 PH. MOTEUR | 3-PH MOTOR | MOT. TRIFAS |
| | 1 | | 0001336254G | 1.00 | MOTORE TRIF. | 3.PH. MOTOR | 3 PH. MOTEUR | 3-DREIPHASENMOTOR | MOT. TRIFAS |
| | 1 | | 0001337014L | 1.00 | MOTORE TRIF. FRENO C.C. | 3-PH. MOTOR D.C. BRAKE | 3-PH. MOTEUR FREIN C.C. | 3-PH. MOTOR G.S. BREMSE | MOT.TRIFAS.FR.C.C. |
| | 1 | | 0001337015B | 1.00 | MOTORE TRIF. FRENO C.C. | 3-PH. MOTOR D.C. BRAKE | 3-PH. MOTEUR FREIN C.C. | 3-PH. MOTOR G.S. BREMSE | MOT.TRIFAS.FR.C.C. |
| | 1 | | 0001337016D | 1.00 | MOTORE TRIF. FRENO C.C. | 3-PH. MOTOR D.C. BRAKE | 3-PH. MOTEUR FREIN C.C. | 3-PH. MOTOR G.S. BREMSE | MOT.TRIFAS.FR.C.C. |
| | 1 | | 0001337017F | 1.00 | MOTORE TRIF. FRENO C.C. | 3-PH. MOTOR D.C. BRAKE | 3-PH. MOTEUR FREIN C.C. | 3-PH. MOTOR G.S. BREMSE | MOT.TRIFAS.FR.C.C. |
| | 1 | | 0001337018H | 1.00 | MOTORE TRIF. FRENO C.C. | 3-PH. MOTOR D.C. BRAKE | 3-PH. MOTEUR FREIN C.C. | 3-PH. MOTOR G.S. BREMSE | MOT.TRIFAS.FR.C.C. |
| | 1 | | 0001337265B | 1.00 | MOTORE TRIF. | 3-PH. MOTOR | 3-PH. MOTEUR | 3-PH. MOTOR | MOT.TRIFAS. |
| | 1 | | 0001337679A | 1.00 | MOTORE TRIF. | 3.PH MOTOR | 3 PH. MOTEUR | 3-PH MOTOR | MOT. TRIFAS |
| | 1 | | 0001337680B | 1.00 | MOTORE TRIF. | 3.PH MOTOR | 3 PH. MOTEUR | 3-PH MOTOR | MOT. TRIFAS |
| | 1 | | 0001337715G | 1.00 | MOTORE TRIF. | 3.PH MOTOR | 3 PH. MOTEUR | 3-PH MOTOR | MOT. TRIFAS |
| | 1 | | 0001337716L | 1.00 | MOTORE TRIF. | 3.PH MOTOR | 3 PH. MOTEUR | 3-PH MOTOR | MOT. TRIFAS |
| | 1 | | 0001337717B | 1.00 | MOTORE TRIF. | 3.PH MOTOR | 3 PH. MOTEUR | 3-PH MOTOR | MOT. TRIFAS |
| | 1 | | 0001337718D | 1.00 | MOTORE TRIF. | 3.PH MOTOR | 3 PH. MOTEUR | 3-PH MOTOR | MOT. TRIFAS |
| | 1 | | 0001337719F | 1.00 | MOTORE TRIF. | 3.PH MOTOR | 3 PH. MOTEUR | 3-PH MOTOR | MOT. TRIFAS |
| | 1 | | 0001337720G | 1.00 | MOTORE TRIF. | 3.PH MOTOR | 3 PH. MOTEUR | 3-PH MOTOR | MOT. TRIFAS |
| | 1 | | 0001337746C | 1.00 | MOTORE TRIF. FRENO C.C. | 3-PH. MOTOR D.C. BRAKE | MOTEUR 3-PH . FREIN C.C | 3-PH. MOTOR G.S. BREMSE | MOT. TRIFAS. FR. C.C. |
| | 1 | | 0001337747E | 1.00 | MOTORE TRIF. FRENO C.C. | 3-PH. MOTOR D.C. BRAKE | MOTEUR 3-PH . FREIN C.C | 3-PH. MOTOR G.S. BREMSE | MOT. TRIFAS. FR. C.C. |
| | 1 | | 0001337748G | 1.00 | MOTORE TRIF. FRENO C.C. | 3-PH. MOTOR D.C. BRAKE | MOTEUR 3-PH . FREIN C.C | 3-PH. MOTOR G.S. BREMSE | MOT. TRIFAS. FR. C.C. |
| | 1 | | 0001337749L | 1.00 | MOTORE TRIF. FRENO C.C. | 3-PH. MOTOR D.C. BRAKE | MOTEUR 3-PH . FREIN C.C | 3-PH. MOTOR G.S. BREMSE | MOT. TRIFAS. FR. C.C. |
| | 1 | | 0001337753G | 1.00 | MOTORE TRIF. FRENO C.C. | 3-PH. MOTOR D.C. BRAKE | MOTEUR 3-PH . FREIN C.C | 3-PH. MOTOR G.S. BREMSE | MOT. TRIFAS. FR. C.C. |
| | 1 | | 0001337754L | 1.00 | MOTORE TRIF. FRENO C.C. | 3-PH. MOTOR D.C. BRAKE | MOTEUR 3-PH . FREIN C.C | 3-PH. MOTOR G.S. BREMSE | MOT. TRIFAS. FR. C.C. |
| | 1 | | 0001337754L | 1.00 | MOTORE TRIF. FRENO C.C. | 3-PH. MOTOR D.C. BRAKE | MOTEUR 3-PH . FREIN C.C | 3-PH. MOTOR G.S. BREMSE | MOT. TRIFAS. FR. C.C. |
| | 1 | | 0001337755B | 1.00 | MOTORE TRIF. FRENO C.C. | 3-PH. MOTOR D.C. BRAKE | MOTEUR 3-PH . FREIN C.C | 3-PH. MOTOR G.S. BREMSE | MOT. TRIFAS. FR. C.C. |
| | 1 | | 0001337756D | 1.00 | MOTORE TRIF. FRENO C.C. | 3-PH. MOTOR D.C. BRAKE | MOTEUR 3-PH . FREIN C.C | 3-PH. MOTOR G.S. BREMSE | MOT. TRIFAS. FR. C.C. |
| | 1 | | 0001337831C | 1.00 | MOTORE TRIF. | 3-PH. MOTOR | 3-PH. MOTEUR | 3-PH. MOTOR | MOT.TRIFAS. |
| | 1 | | 0001337832E | 1.00 | MOTORE TRIF. | 3-PH. MOTOR | 3-PH. MOTEUR | 3-PH. MOTOR | MOT.TRIFAS. |
| | 1 | | 0001337834L | 1.00 | MOTORE TRIF. | 3-PH. MOTOR | 3-PH. MOTEUR | 3-PH. MOTOR | MOT.TRIFAS. |
| | 1 | | 0001337835B | 1.00 | MOTORE TRIF. | 3-PH. MOTOR | 3-PH. MOTEUR | 3-PH. MOTOR | MOT.TRIFAS. |
| | 1 | | 0001337836D | 1.00 | MOTORE TRIF. | 3-PH. MOTOR | 3-PH. MOTEUR | 3-PH. MOTOR | MOT.TRIFAS. |
| | 1 | | 0001337869D | 1.00 | MOTORE TRIF. FRENO C.C. | 3-PH. MOTOR D.C. BRAKE | 3-PH. MOTEUR FREIN C.C. | 3-PH. MOTOR G.S. BREMSE | MOT.TRIFAS.FR.C.C. |
| | 1 | | 0001337870E | 1.00 | MOTORE TRIF. FRENO C.C. | 3-PH. MOTOR D.C. BRAKE | 3-PH. MOTEUR FREIN C.C. | 3-PH. MOTOR G.S. BREMSE | MOT.TRIFAS.FR.C.C. |
| | 1 | | 0001337871G | 1.00 | MOTORE TRIF. FRENO C.C. | 3-PH. MOTOR D.C. BRAKE | 3-PH. MOTEUR FREIN C.C. | 3-PH. MOTOR G.S. BREMSE | MOT.TRIFAS.FR.C.C. |
| | 1 | | 0001337873B | 1.00 | MOTORE TRIF. FRENO C.C. | 3-PH. MOTOR D.C. BRAKE | 3-PH. MOTEUR FREIN C.C. | 3-PH. MOTOR G.S. BREMSE | MOT.TRIFAS.FR.C.C. |
| | 1 | | 0001337874D | 1.00 | MOTORE TRIF. FRENO C.C. | 3-PH. MOTOR D.C. BRAKE | 3-PH. MOTEUR FREIN C.C. | 3-PH. MOTOR G.S. BREMSE | MOT.TRIFAS.FR.C.C. |
| | 1 | | 0001341094D | 1.00 | MOTORE TRIF. | 3.PH. MOTOR | 3 PH. MOTEUR | 3-DREIPHASENMOTOR | MOT. TRIFAS |

| N | P | C | CODICE | Q.TY | DENOMINAZIONE | DESCRIPTION | DESIGNATION | BEZEICHNUNG | DENOMINACION |
|---|---|---|---|---|---|---|---|---|---|
| | 1 | | 0001341219A | 1.00 | MOTORE TRIF. | 3.PH. MOTOR | 3 PH. MOTEUR | 3-DREIPHASENMOTOR | MOT. TRIFAS |
| | 2 | | 0316332549H | 1.00 | DISTANZIALE | SPACER | ENTRETOISE | DISTANZSTUECK | DISTANCIADOR |
| | 2 | | 0322730307L | 1.00 | DISTANZIALE | SPACER | ENTRETOISE | DISTANZSTUECK | DISTANCIADOR |
| | 3 | | 0000640190G | 8.00 | DADO | NUT | ECROU | MUTTER | TUERCA |
| | 4 | | 0322730172B | 1.00 | PULEGGIA | PULLEY | POULIE | RIEMENSCHEIBE | POLEA |
| | 4 | | 0322730173D | 1.00 | PULEGGIA | PULLEY | POULIE | RIEMENSCHEIBE | POLEA |
| | 4 | | 0322730174F | 1.00 | PULEGGIA | PULLEY | POULIE | RIEMENSCHEIBE | POLEA |
| | 4 | | 0322730175H | 1.00 | PULEGGIA | PULLEY | POULIE | RIEMENSCHEIBE | POLEA |
| | 4 | | 0322730176A | 1.00 | PULEGGIA | PULLEY | POULIE | RIEMENSCHEIBE | POLEA |
| | 4 | | 0322730177C | 1.00 | PULEGGIA | PULLEY | POULIE | RIEMENSCHEIBE | POLEA |
| | 4 | | 0322730178E | 1.00 | PULEGGIA | PULLEY | POULIE | RIEMENSCHEIBE | POLEA |
| | 4 | | 0322730179G | 1.00 | PULEGGIA | PULLEY | POULIE | RIEMENSCHEIBE | POLEA |
| | 5 | | 0000604041G | 1.00 | CINGHIA PIATTA | FLAT BELT | COURROIE PLATE | FLACHRIEMEN | CORREA PLANA |
| | 5 | | 0000604053C | 1.00 | CINGHIA | BELT | COURROIE | RIEMEN | CORREA |
| | 5 | | 0000604151A | 1.00 | CINGHIA | BELT | COURROIE | RIEMEN | CORREA |
| | 5 | | 0000604152C | 1.00 | CINGHIA PIATTA | FLAT BELT | COURROIE PLATE | FLACHRIEMEN | CORREA PLANA |
| | 5 | | 0000605369E | 1.00 | CINGHIA PIATTA | FLAT BELT | COURROIE PLATE | FLACHRIEMEN | CORREA PLANA |
| | 5 | | 0000605370F | 1.00 | CINGHIA PIATTA | FLAT BELT | COURROIE PLATE | FLACHRIEMEN | CORREA PLANA |
| | 5 | | 0000605371H | 1.00 | CINGHIA PIATTA | FLAT BELT | COURROIE PLATE | FLACHRIEMEN | CORREA PLANA |
| | 5 | | 0000605372A | 1.00 | CINGHIA PIATTA | FLAT BELT | COURROIE PLATE | FLACHRIEMEN | CORREA PLANA |
| | 6 | | 0522730300H | 1.00 | SUPPORTO MOTORE | SUPPORT | SUPPORT | STUETZE | SOPORTE MOTOR |
| | 7 | | 0000305249G | 1.00 | RONDELLA | WASHER | RONDELLE | SCHEIBE | ARANDELA |
| | 7 | | 0310890302G | 1.00 | RONDELLA | WASHER | RONDELLE | SCHEIBE | ARANDELA |
| | 7 | | 0319431135F | 1.00 | RONDELLA | WASHER | RONDELLE | SCHEIBE | ARANDELA |
| | 8 | | 0000310246G | 1.00 | VITE | SCREW | VIS | SCHRAUBE | TORNILLO |
| | 8 | | 0000310363E | 1.00 | VITE | SCREW | VIS | SCHRAUBE | TORNILLO |
| | 8 | | 0000310485D | 1.00 | VITE | SCREW | VIS | SCHRAUBE | TORNILLO |
| | 9 | | 0000604352G | 1.00 | CINGHIA DENTATA | TOOTHED BELT | COURROIE DENTEE | ZAHNRIEMEN | CORREA DENTADA |
| | 9 | | 0000605112L | 1.00 | CINGHIA DENTATA | TOOTHED BELT | COURROIE DENTEE | ZAHNRIEMEN | CORREA DENT. |
| | 10 | | 0519435321L | 1.00 | PULEGGIA | PULLEY | POULIE | RIEMENSCHEIBE | POLEA |
| | 10 | | 0519435323D | 1.00 | PULEGGIA | PULLEY | POULIE | RIEMENSCHEIBE | POLEA |
| | 10 | | 0522730803F | 1.00 | PULEGGIA | PULLEY | POULIE | RIEMENSCHEIBE | POLEA |
| | 10 | | 0711133713C | 1.00 | PULEGGIA | PULLEY | POULIE | RIEMENSCHEIBE | POLEA |
| | 11 | | 0001352751B | 1.00 | INVERTER | INVERTER | INVERSEUR | WECHSELRICHTER | INVERTER |

227-1505

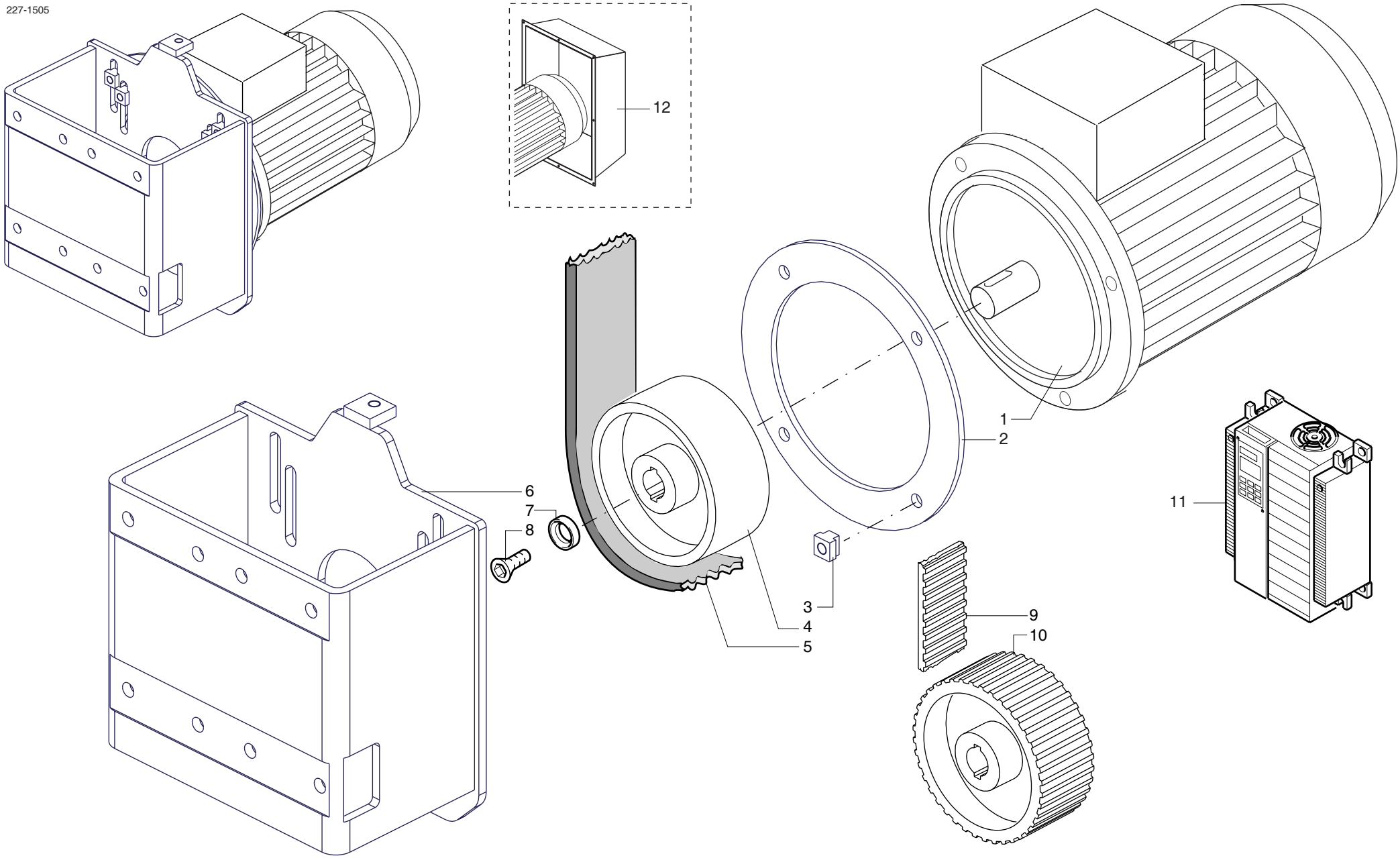


| | | | |
|---|---|---|---|
| scm | SUPERSET XL | MOTORIZZAZIONE - (01.01.1901 -> - p.20,06,2007)<br>MOTORIZATION - MOTORISATION<br>MOTORISIERUNG - MOTORIZACION | 227-1505-0 |

| N | P | C | CODICE | Q.TY | DENOMINAZIONE | DESCRIPTION | DESIGNATION | BEZEICHNUNG | DENOMINACION |
|---|---|---|---|---|---|---|---|---|---|
| | 01.01.1901 -> 01.01.3000 | | | | Note: 2822731725A | | | | |
| | 1 | | 0722740132H | 1.00 | GIUNTO | JOINT | JOINT | KUPPLUNG | JUNTA |
| | 2 | | 0316030500H | 1.00 | BOCCOLA | BUSHING | DOUILLE | BUCHSE | CASQUILLO |
| | 3 | | 0310130604G | 1.00 | SCATOLA DI RINVIO | TRANSFER CASE | BOITE | VORGELEGEKASTEN | CAJA |
| | 4 | | 0319430902C | 1.00 | VITE | SCREW | VIS | SCHRAUBE | TORNILLO |
| | 5 | | 0000645045F | 1.00 | LINGUETTA | FEATHER KEY | LANGUETTE | FEDERKEIL | LINGUETA |
| | 6 | | 0000644268H | 1.00 | ANELLO SEEGER | CIRCLIP | CIRCLIP | SEEGERRING | SEEGER |
| | 7 | | 0316031000H | 1.00 | DISTANZIALE | SPACER | ENTRETOISE | DISTANZSTUECK | DISTANCIADOR |
| | 8 | | 0000644043A | 1.00 | ANELLO SEEGER | CIRCLIP | CIRCLIP | SEEGERRING | SEEGER |
| | 9 | | 0000606100E | 1.00 | CUSCINETTO | BEARING | ROULEMENT | LAGER | COJINETE |
| | 10 | | 0310190116E | 1.00 | VITE SENZA FINE | WORM | VIS SANS FIN | SCHNECKE | TORNILO SIN FIN |
| | 11 | | 0000613034D | 4.00 | RALLA | WASHER | CRAPAUDINE | SCHEIBE | RANGUA |
| | 12 | | 0000613033B | 2.00 | GABBIA A RULLINI | ROLLER CAGE | CAGE A ROULEAUX | WALZENKAEFIG | COJINETE |
| | 13 | | 0319430904G | 1.00 | CORONA DENTATA | GEAR WHEEL | COURONNE DENTEE | ZAHNRAD | RUEDA DENTADA |
| | 14 | | 0322740142A | 2.00 | FLANGIA | FLANGE | FLASQUE | FLANSCH | BRIDA |

227-1105

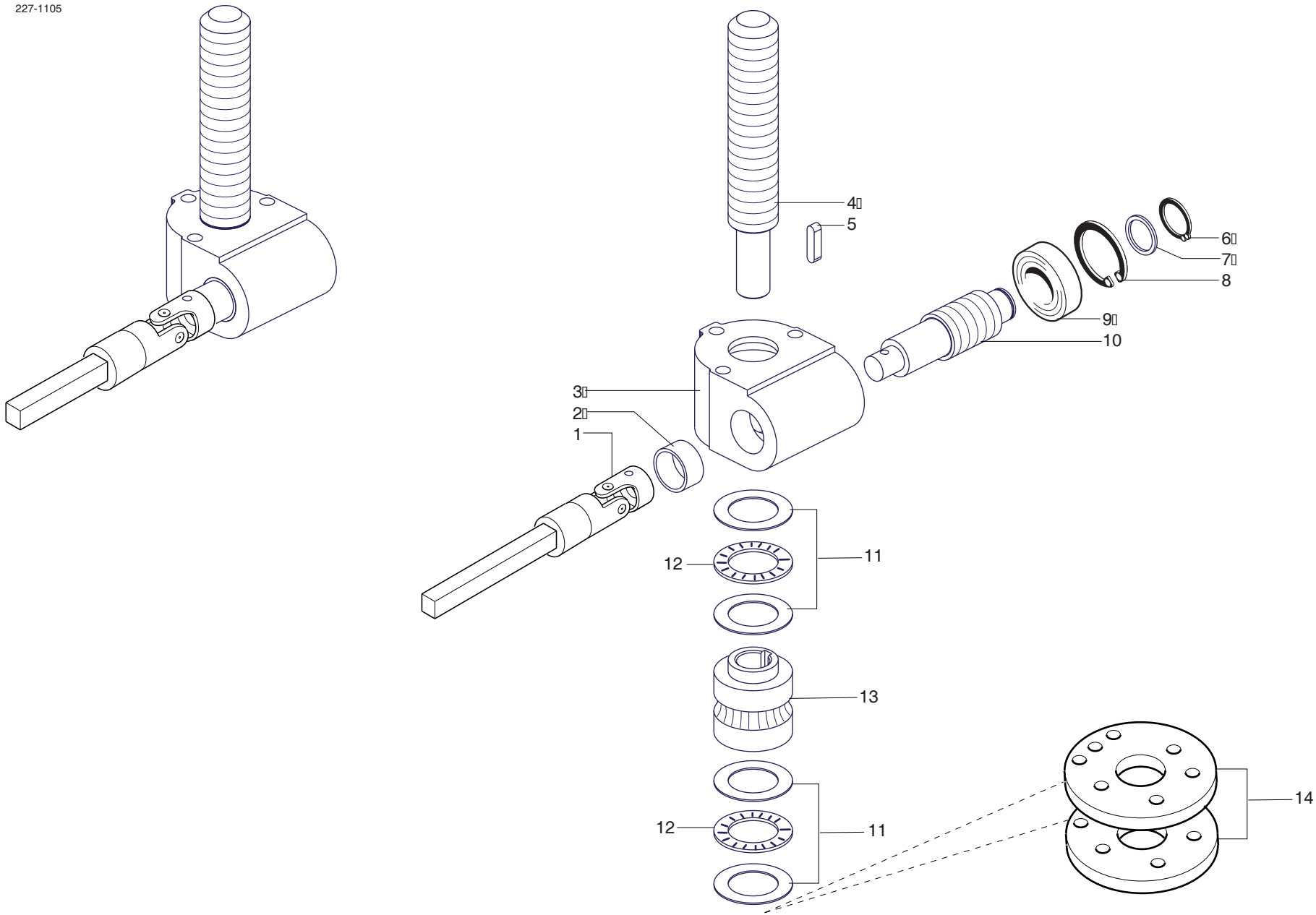


| scm | SUPERSET XL | POSIZIONAMENTO VERTICALE MANUALE - (01.01.1901 -> - p.20,06,2007)<br>MANUAL VERTICAL ADJUSTMENT - REGLAGE VERTICAL MANUEL<br>MANUELLE VERTIKALVERSTELLUNG - UBICACION VERTICAL MANUAL | 227-1506-0 |
|---|---|---|---|

| N | P | C | CODICE | Q.TY | DENOMINAZIONE | DESCRIPTION | DESIGNATION | BEZEICHNUNG | DENOMINACION |
|---|---|---|---|---|---|---|---|---|---|
| | 01.01.1901 -> 01.01.3000 | | | | Note: 2822731720L | | | | |
| | 1 | | 0000635055E | 1.00 | INDICATORE NUMERICO | INDICATOR | INDICATEUR | ANZEIGER | INDICADOR NUMERICO |
| | 1 | | 0000635143B | 1.00 | INDICATORE NUMERICO | INDICATOR | INDICATEUR | ANZEIGER | INDICADOR NUMERICO |
| | 1 | | 0766580007D | 1.00 | INDICATORE NUMERICO LIKA | INDICATOR | INDICATEUR | ANZEIGER | INDICADOR NUMERICO |
| | 2 | | 0522730170B | 1.00 | FLANGIA | FLANGE | FLASQUE | FLANSCH | BRIDA |
| | 3 | | 0000613041H | 2.00 | GABBIA A RULLINI | ROLLER CAGE | CAGE A ROULEAUX | WALZENKAEFIG | COJINETE |
| | 4 | | 0316330020C | 1.00 | RONDELLA | WASHER | RONDELLE | SCHEIBE | ARANDELA |
| | 5 | | 0000613045G | 4.00 | RALLA | WASHER | CRAPAUDINE | SCHEIBE | RANGUA |
| | 6 | | 0322730171L | 1.00 | BOCCOLA | BUSHING | DOUILLE | BUCHSE | CASQUILLO |
| | 7 | | 0322730625D | 1.00 | BARRA | BAR | BARRE | STANGE | BARRA |
| | 8 | | 0722730303L | 1.00 | GIUNTO | JOINT | JOINT | KUPPLUNG | JUNTA |
| | 9 | | 0322775007G | 1.00 | TARGA | PLATE | PLAQUE | SCHILD | TARJETA |
| | 10 | | 0319013512L | 1.00 | POMELLO | BALL GRIP | POIGNEE | KUGELGRIFF | POMO |

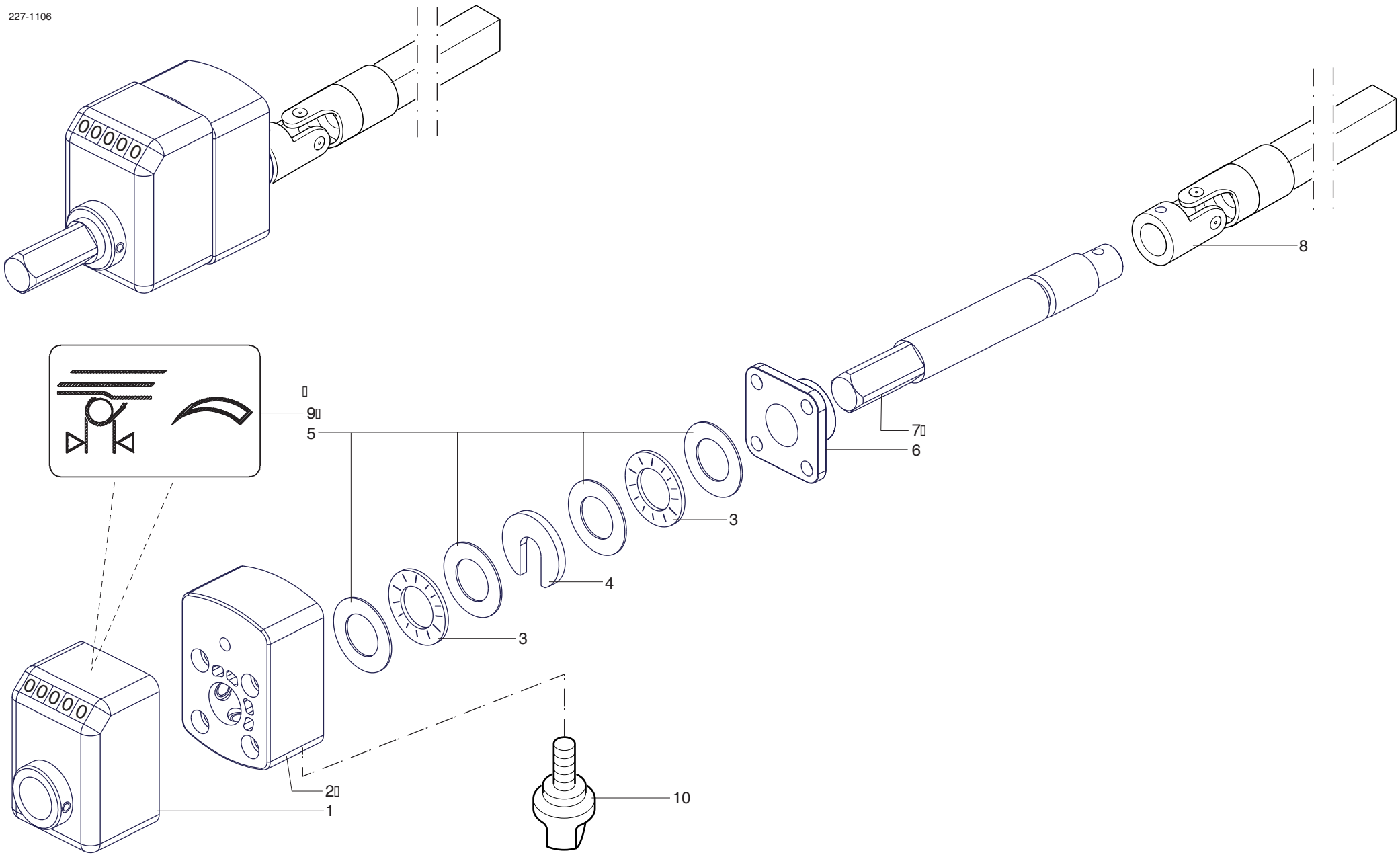


| scm | SUPERSET XL | POSIZIONAMENTO VERTICALE MANUALE - (01.01.1901 -> - p.20,06,2007)<br>MANUAL VERTICAL ADJUSTMENT - REGLAGE VERTICAL MANUEL<br>MANUELLE VERTIKALVERSTELLUNG - UBICACION VERTICAL MANUAL | 227-1507-0 |
|---|---|---|---|

| N | P | C | CODICE | Q.TY | DENOMINAZIONE | DESCRIPTION | DESIGNATION | BEZEICHNUNG | DENOMINACION |
|---|---|---|---|---|---|---|---|---|---|
| | 01.01.1901 -> 01.01.3000 | | | | Note: 3022775040C | | | | |
| | 1 | | 0311175007G | 1.00 | TARGA | RATING PLATE | PLAQUE | SCHILD | TARJETA |
| | 1 | | 0321910791A | 1.00 | TARGA | PLATE | PLAQUE | SCHILD | TARJETA |
| | 1 | | 0321910819B | 1.00 | TARGA 7000 | RATING PLATE | PLAQUE | SCHILD | TARJETA |
| | 2 | | 0311175009B | 1.00 | TARGA | RATING PLATE | PLAQUE | SCHILD | TARJETA |
| | 2 | | 0321910792C | 1.00 | TARGA | PLATE | PLAQUE | SCHILD | TARJETA |
| | 3 | | 0302110049H | 1.00 | TARGA | PLATE | PLAQUE | SCHILD | TARJETA |
| | 4 | | 0302110069A | 1.00 | TARGA | PLATE | PLAQUE | SCHILD | TARJETA |

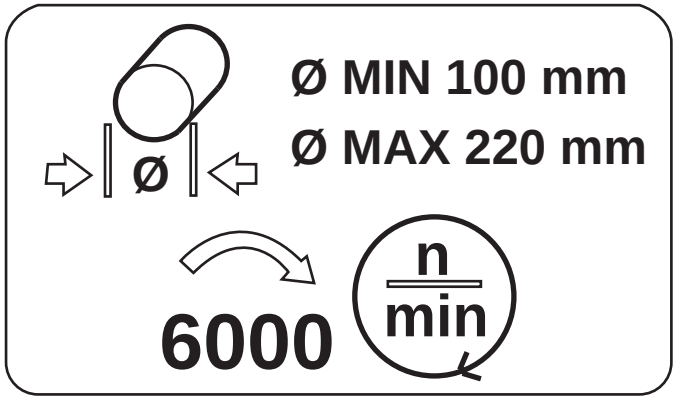
Ø MIN 100 mm
Ø MAX 220 mm
Ø
6000
n
min

1

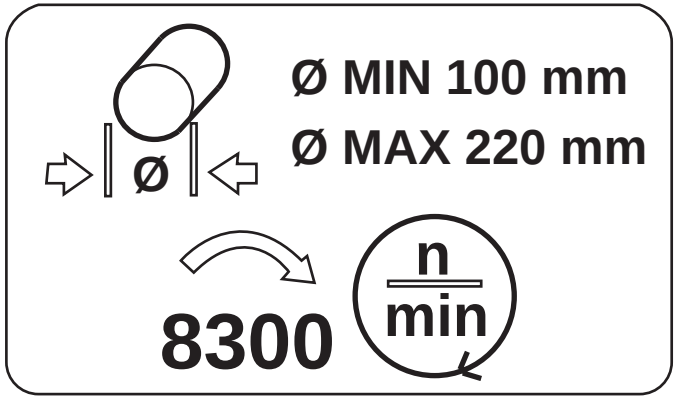
Ø MIN 100 mm
Ø MAX 220 mm
Ø
8300
n
min

2



3

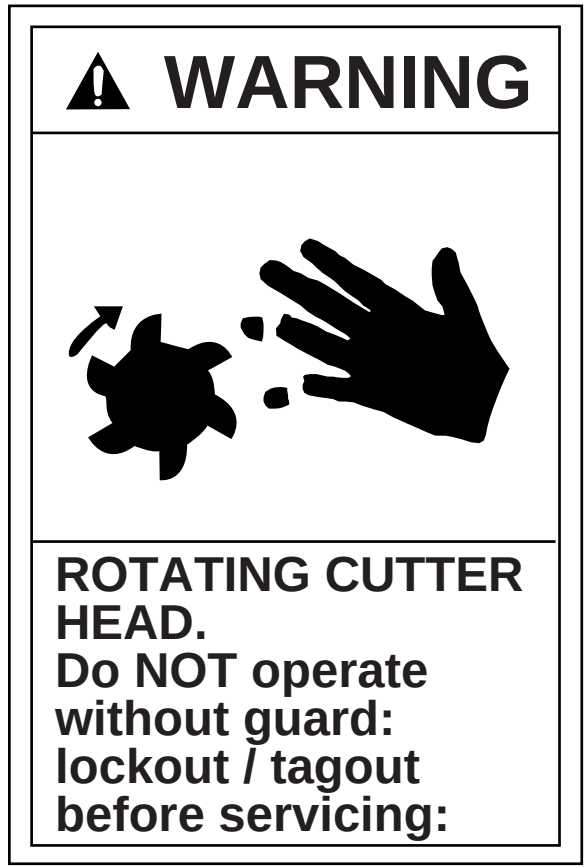
WARNING
ROTATING CUTTER HEAD.
Do NOT operate without guard:
lockout / tagout before servicing:

4

| scm | SUPERSET XL | GRUPPO OPERATORE UNIVERSALE - (p.20,06,2007)<br>UNIVERSAL HEAD UNIT - GROUPE OPERATEUR UNIVERSEL<br>UNIVERSALAGGREGAT - GRUPO OPERADOR UNIVERSAL | 227-1600-0 |
|---|---|---|---|

| N | P | C | CODICE | Q.TY | DENOMINAZIONE | DESCRIPTION | DESIGNATION | BEZEICHNUNG | DENOMINACION |
|---|---|---|---|---|---|---|---|---|---|
| | 01.01.1901 -> 01.01.3000 | | | | Note: 3122790000L | | | | |
| | 0 | | 1111111111F | 0.00 | INDICE | POINTER | INDICATEUR | ZEIGER | INDICE |
| | 1 | | 0319013512L | 1.00 | POMELLO | BALL GRIP | POIGNEE | KUGELGRIFF | POMO |
| | 2 | | 0310830314L | 1.00 | BOCCOLA | BUSHING | DOUILLE | BUCHSE | CASQUILLO |
| | 3 | | 2711135400C | 1.00 | BLOCCAGGIO | LOCKING DEVICE | BLOCAGE | SPERRE | BLOQUEO |

227-1600

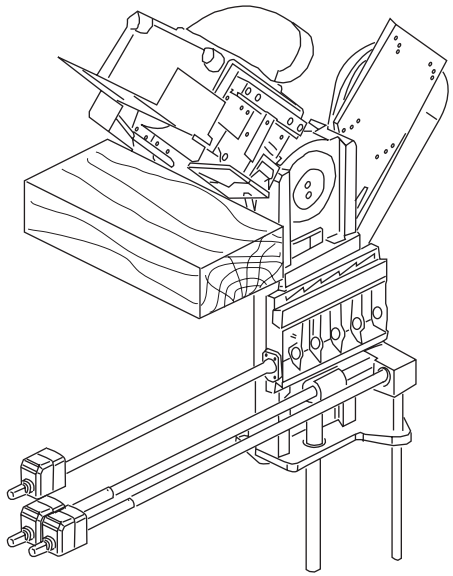

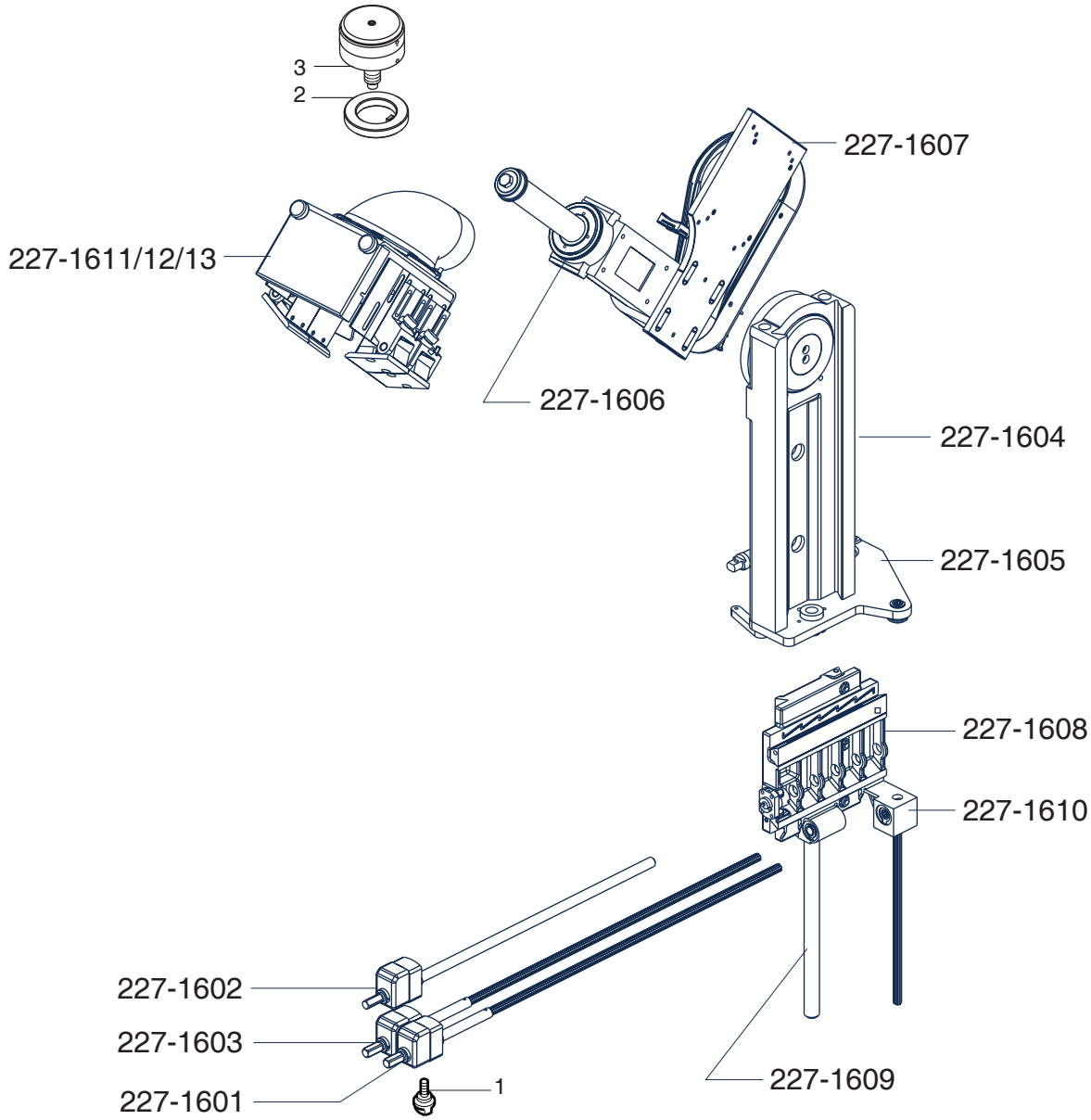


| | | | |
|---|---|---|---|
| scm | SUPERSET XL | GRUPPO OPERATORE UNIVERSALE - (01.01.1901 -> - p.20,06,2007)<br>UNIVERSAL HEAD UNIT - GROUPE OPERATEUR UNIVERSEL<br>UNIVERSALAGGREGAT - GRUPO OPERADOR UNIVERSAL | 227-1600-0 |

| N | P | C | CODICE | Q.TY | DENOMINAZIONE | DESCRIPTION | DESIGNATION | BEZEICHNUNG | DENOMINACION |
|---|---|---|---|---|---|---|---|---|---|
| | 01.01.1901 -> 01.01.3000 | | | | Note: ----- | | | | |
| | 1 | | 0001502860D | 1.00 | CILINDRO PNEUMATICO | PNEUMATIC CYLINDER | CYLINDRE PNEUM. | PN.ZYLINDER | STANDARD |
| | 2 | | 0311190402D | 1.00 | PIASTRA | PLATE | PLAQUE | PLATTE | PLANCHA |
| | 2 | | 0322790605E | 1.00 | FLANGIA | FLANGE | FLASQUE | FLANSCH | BRIDA |
| | 3 | | 0522790607D | 1.00 | TRAVERSA | CROSS MEMBER | TRAVERSE | QUERBALKEN | PUENTE |
| | 4 | | 0001308592L | 1.00 | FINECORSA | LIMIT SWITCH | FIN DE COURSE | ENDSCHALTER | FIN CARRERA |
| | 5 | | 0001308846L | 2.00 | FINECORSA PER CILINDRO | LIMIT SWITCH | FIN DE COURSE | ENDSCHALTER | FIN CARRERA |
| | 6 | | 0001344098F | 1.00 | ELETTROVALVOLA V.110 | SOLENOID VALVE | ELECTROVALVE | MAGNETVENTIL | ELECTROVALVULA |
| | 7 | | 0333535056C | 1.00 | SUPPORTO | SUPPORT | SUPPORT | STUETZE | SOPORTE |
| | 8 | | 0001308055A | 1.00 | FINECORSA | MICROSWITCH | FIN DE COURSE | MIKROSCHALTER | FIN CARRERA |
| | 9 | | 0001340343B | 3.00 | CAMMA AZION. | CAM | CAME | TREIBNOCKEN | EXCENTRICO ACC. |
| | 10 | | 0319432022G | 1.00 | GUIDA PORTACAMME L=248 | CAM HOLDER GUIDE | GUIDE PORTE-CAMES | NOCKENHALTER | GUIA PORTA EXC. |
| | 11 | | 0311190403F | 1.00 | ANGOLARE | SQUARE SUPPORT | CORNIERE | WINKELSUPPORT | ESQUINERO |

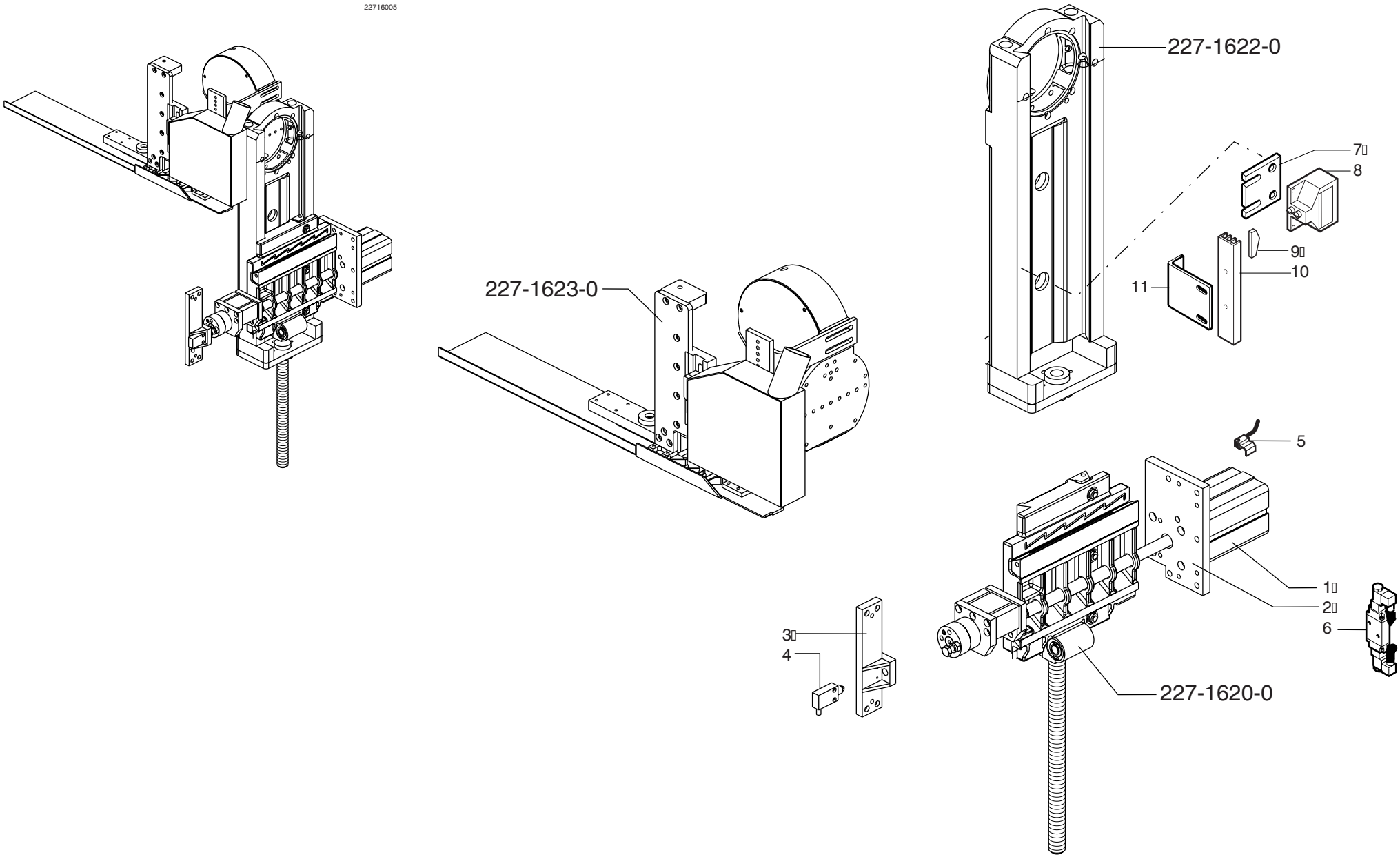


| | | | |
|---|---|---|---|
| scm | SUPERSET XL | GRUPPO RECUPERO LISTELLO - (01.01.1901 -> - p.20,06,2007)<br>GLAZE BEAD RECOVERY UNIT - GROUPE RECUPERATION PARA-CLOSE<br>AGG. GLASLEISTENRUECKGEWINNEN - GRUPO RECUPERACION JUNQUILLO | 227-1600-5 |

| scm | SUPERSET XL | ROTAZIONE TESTE (UNIVERSALE) - (p.20,06,2007)<br>HEAD ROTATION (UNIVERSAL UNIT) - ROTATION TETE (GROUPE UNIVERSEL)<br>KOPFDREHUNG (UNIVERSALAGGR.) - ROTACION CABEZAL (UNIVERSAL) | 227-1601-0 |
|---|---|---|---|

| N | P | C | CODICE | Q.TY | DENOMINAZIONE | DESCRIPTION | DESIGNATION | BEZEICHNUNG | DENOMINACION |
|---|---|---|---|---|---|---|---|---|---|
| | 01.01.1901 -> 01.01.3000 | | | | Note: 2822790110G | | | | |
| | 1 | | 0000635003E | 1.00 | INDICATORE | INDICATOR | INDICATEUR | ANZEIGER | INDICADOR |
| | 1 | | 0000635004G | 1.00 | INDICATORE | INDICATOR | INDICATEUR | ANZEIGER | INDICADOR |
| | 1 | | 0766580007D | 1.00 | INDICATORE NUMERICO LIKA | INDICATOR | INDICATEUR | ANZEIGER | INDICADOR NUMERICO |
| | 2 | | 0522730170B | 1.00 | FLANGIA | FLANGE | FLASQUE | FLANSCH | BRIDA |
| | 3 | | 0000613045G | 4.00 | RALLA | WASHER | CRAPAUDINE | SCHEIBE | RANGUA |
| | 4 | | 0000613041H | 2.00 | GABBIA A RULLINI | ROLLER CAGE | CAGE A ROULEAUX | WALZENKAEFIG | COJINETE |
| | 5 | | 0316330020C | 1.00 | RONDELLA | WASHER | RONDELLE | SCHEIBE | ARANDELA |
| | 6 | | 0322730171L | 1.00 | BOCCOLA | BUSHING | DOUILLE | BUCHSE | CASQUILLO |
| | 7 | | 0522790208G | 1.00 | ASTA | ROD | TIGE | STANGE | ASTA |
| | 8 | | 0322775023A | 1.00 | TARGA | PLATE | PLAQUE | SCHILD | TARJETA |
| | 9 | | 0319013512L | 1.00 | POMELLO | BALL GRIP | POIGNEE | KUGELGRIFF | POMO |

227-1601

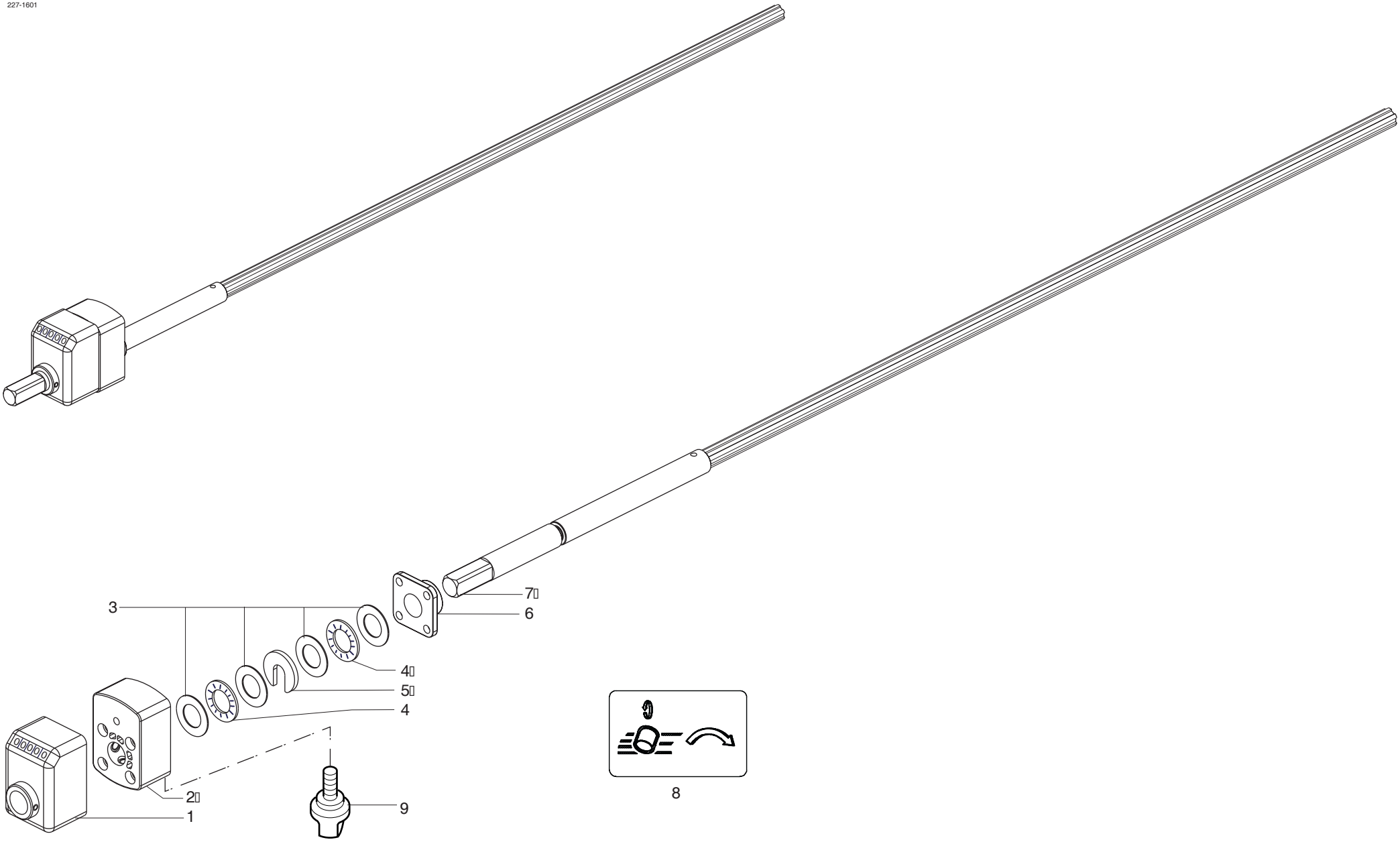


| | | | |
|---|---|---|---|
| scm | SUPERSET XL | ROTAZIONE TESTE (UNIVERSALE) - (01.01.1901 -> - p.20,06,2007)<br>HEAD ROTATION (UNIVERSAL UNIT) - ROTATION TETE (GROUPE UNIVERSEL)<br>KOPFDREHUNG (UNIVERSALAGGR.) - ROTACION CABEZAL (UNIVERSAL) | 227-1601-0 |

| scm | SUPERSET XL | POSIZIONAMENTO ORIZZONTALE (UNIVERSALE) - (p.20,06,2007)<br>HORIZONTAL ADJUSTMENT (UNIVERSAL UNIT) - REGLAGE HORIZONTAL (GROUPE UNIVERSAL)<br>HORIZONTALVERSTELLUNG (UNIVERSALAGGR.) - UBICACION HORIZONTAL (UNIVERSAL) | 227-1602-0 |
|---|---|---|---|

| N | P | C | CODICE | Q.TY | DENOMINAZIONE | DESCRIPTION | DESIGNATION | BEZEICHNUNG | DENOMINACION |
|---|---|---|---|---|---|---|---|---|---|
| | 01.01.1901 -> 01.01.3000 | | | | Note: 2822790120H | | | | |
| | 1 | | 0000635039B | 1.00 | INDICATORE NUMERICO | INDICATOR | INDICATEUR | ANZEIGER | INDICADOR |
| | 1 | | 0000635270A | 1.00 | INDICATORE NUMERICO | INDICATOR | INDICATEUR | ANZEIGER | INDICADOR NUMERICO |
| | 1 | | 0766580007D | 1.00 | INDICATORE NUMERICO LIKA | INDICATOR | INDICATEUR | ANZEIGER | INDICADOR NUMERICO |
| | 2 | | 0522730170B | 1.00 | FLANGIA | FLANGE | FLASQUE | FLANSCH | BRIDA |
| | 3 | | 0000613045G | 4.00 | RALLA | WASHER | CRAPAUDINE | SCHEIBE | RANGUA |
| | 4 | | 0000613041H | 2.00 | GABBIA A RULLINI | ROLLER CAGE | CAGE A ROULEAUX | WALZENKAEFIG | COJINETE |
| | 5 | | 0316330020C | 1.00 | RONDELLA | WASHER | RONDELLE | SCHEIBE | ARANDELA |
| | 6 | | 0322730171L | 1.00 | BOCCOLA | BUSHING | DOUILLE | BUCHSE | CASQUILLO |
| | 7 | | 0322790207A | 1.00 | VITE | SCREW | VIS | SCHRAUBE | TORNILLO |
| | 8 | | 0322775021F | 1.00 | TARGA | PLATE | PLAQUE | SCHILD | TARJETA |
| | 9 | | 0319013512L | 1.00 | POMELLO | BALL GRIP | POIGNEE | KUGELGRIFF | POMO |

227-1602

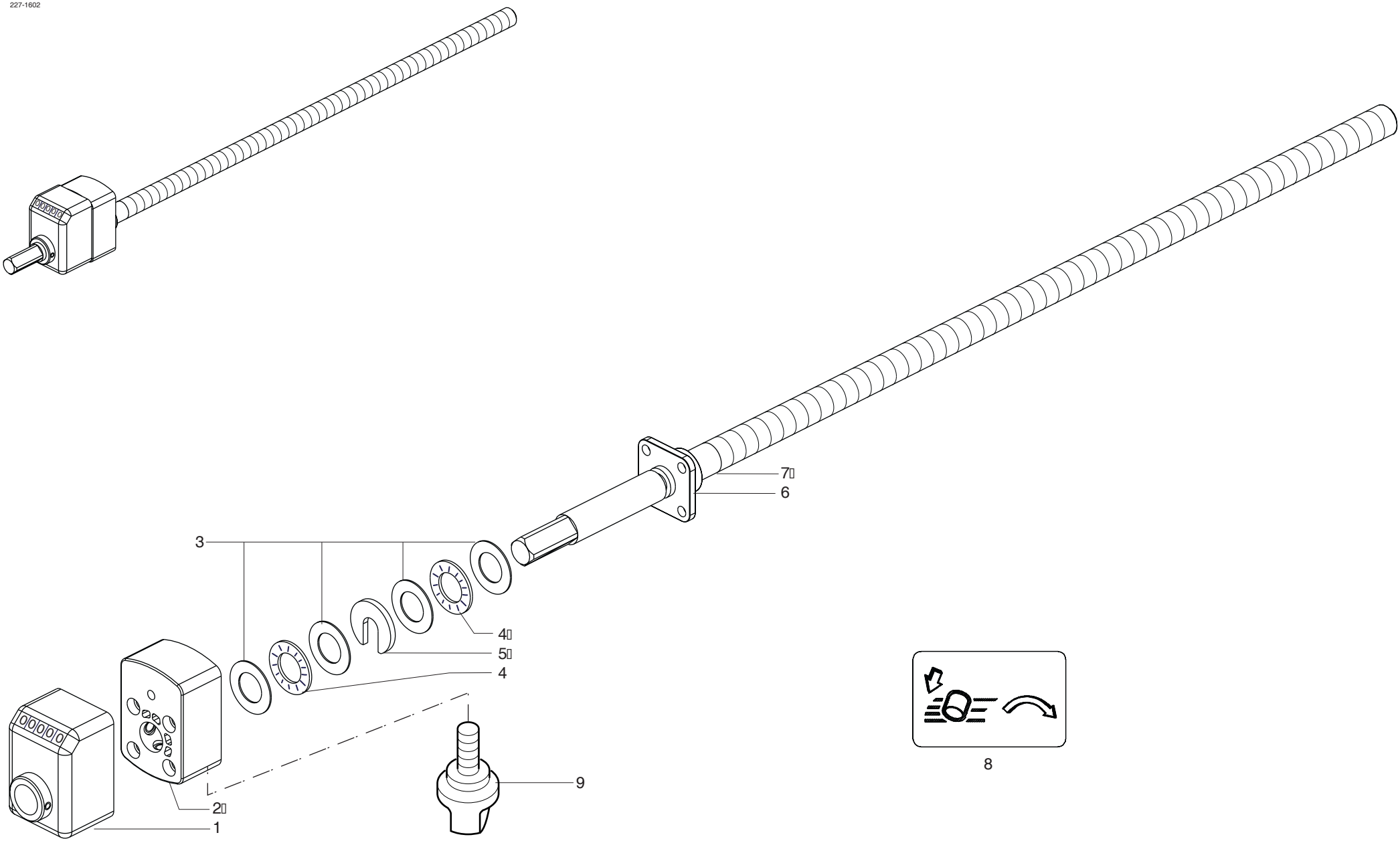


| scm | SUPERSET XL | POSIZIONAMENTO ORIZZONTALE (UNIVERSALE) - (01.01.1901 -> - p.20,06,2007)<br>HORIZONTAL ADJUSTMENT (UNIVERSAL UNIT) - REGLAGE HORIZONTAL (GROUPE UNIVERSAL)<br>HORIZONTALVERSTELLUNG (UNIVERSALAGGR.) - UBICACION HORIZONTAL (UNIVERSAL) | 227-1602-0 |
|---|---|---|---|

| scm | SUPERSET XL | POSIZIONAMENTO VERTICALE (UNIVERSALE) - (p.20,06,2007)<br>MANUAL VERTICAL ADJUSTMENT (UNIVERSAL) - REGLAGE VERTICAL MANUEL-GROUPE UNIVERSAL<br>MANUELLE VERTIKALVERSTELLUNG UNIVERSALAG - UBICACION VERTICAL (UNIVERSAL) | 227-1603-0 |
|---|---|---|---|

| N | P | C | CODICE | Q.TY | DENOMINAZIONE | DESCRIPTION | DESIGNATION | BEZEICHNUNG | DENOMINACION |
|---|---|---|---|---|---|---|---|---|---|
| | 01.01.1901 -> 01.01.3000 | | | | Note: 2822790130L | | | | |
| | 1 | | 0000635036E | 1.00 | INDICATORE NUMERICO | INDICATOR | INDICATEUR | ANZEIGER | INDICADOR NUMERICO |
| | 1 | | 0000635038L | 1.00 | INDICATORE NUMERICO | INDICATOR | INDICATEUR | ANZEIGER | INDICADOR NUMERICO |
| | 1 | | 0766580007D | 1.00 | INDICATORE NUMERICO LIKA | INDICATOR | INDICATEUR | ANZEIGER | INDICADOR NUMERICO |
| | 2 | | 0522730170B | 1.00 | FLANGIA | FLANGE | FLASQUE | FLANSCH | BRIDA |
| | 3 | | 0000613045G | 4.00 | RALLA | WASHER | CRAPAUDINE | SCHEIBE | RANGUA |
| | 4 | | 0000613041H | 2.00 | GABBIA A RULLINI | ROLLER CAGE | CAGE A ROULEAUX | WALZENKAEFIG | COJINETE |
| | 5 | | 0316330020C | 1.00 | RONDELLA | WASHER | RONDELLE | SCHEIBE | ARANDELA |
| | 6 | | 0322730171L | 1.00 | BOCCOLA | BUSHING | DOUILLE | BUCHSE | CASQUILLO |
| | 7 | | 0522790208G | 1.00 | ASTA | ROD | TIGE | STANGE | ASTA |
| | 8 | | 0322775022H | 1.00 | TARGA | PLATE | PLAQUE | SCHILD | TARJETA |
| | 9 | | 0319013512L | 1.00 | POMELLO | BALL GRIP | POIGNEE | KUGELGRIFF | POMO |

227-1603

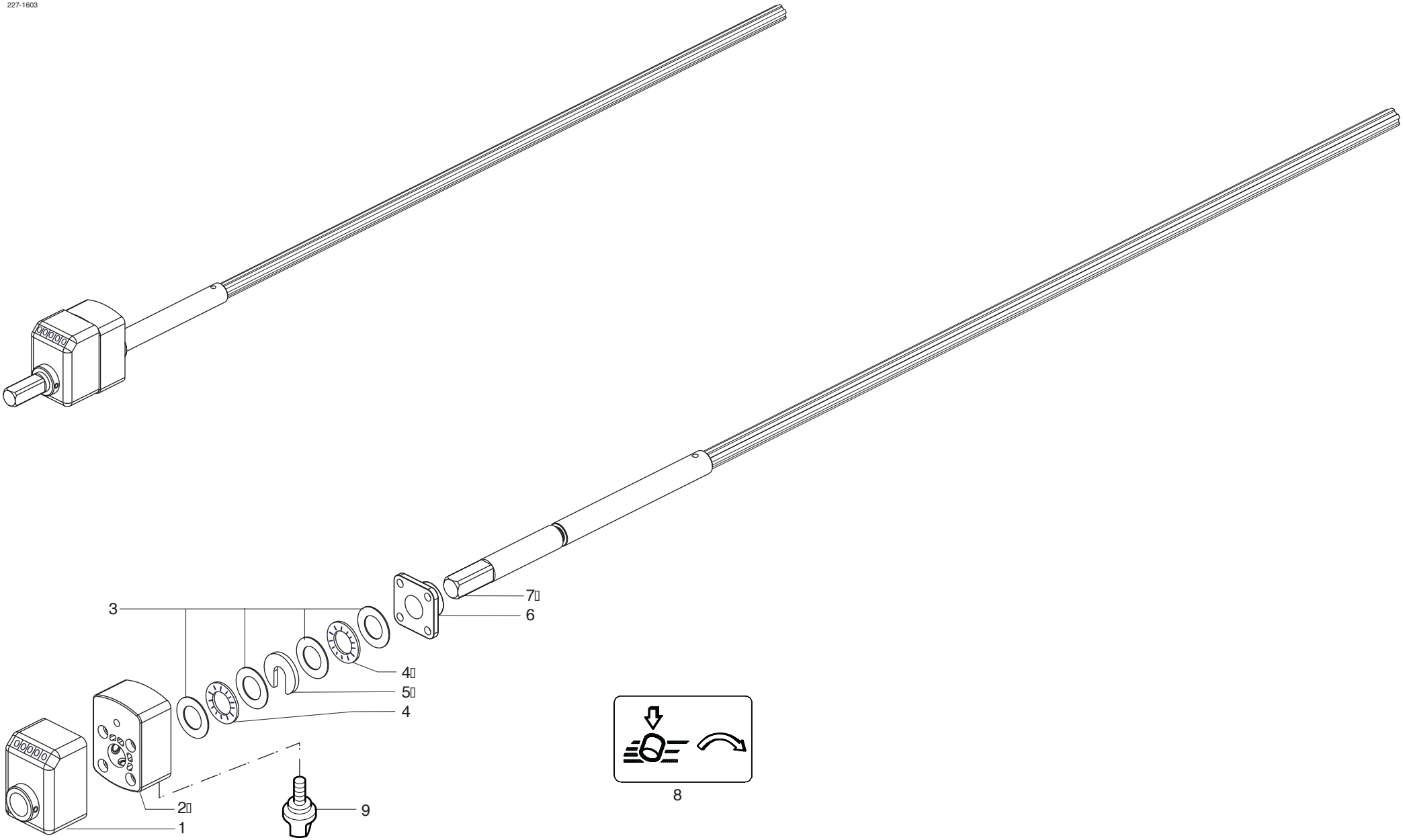


| scm | SUPERSET XL | POSIZIONAMENTO VERTICALE (UNIVERSALE) - (01.01.1901 -> - p.20,06,2007)<br>MANUAL VERTICAL ADJUSTMENT (UNIVERSAL) - REGLAGE VERTICAL MANUEL-GROUPE UNIVERSAL<br>MANUELLE VERTIKALVERSTELLUNG UNIVERSALAG - UBICACION VERTICAL (UNIVERSAL) | 227-1603-0 |
|---|---|---|---|

| scm | SUPERSET XL | SLITTA VERTICALE PER UNIVERSALE - (p.20,06,2007)<br>VERTICAL SLIDE FOR UNIVERSAL SPINDLE - GLISSIERE VERTICALE (ARBRE UNIVERSEL)<br>VERTIKALSCHLITTEN (UNIVERSALWELLE) - TRINEO VERTICAL PARA UNIVERSAL | 227-1604-0 |
|---|---|---|---|

| N | P | C | CODICE | Q.TY | DENOMINAZIONE | DESCRIPTION | DESIGNATION | BEZEICHNUNG | DENOMINACION |
|---|---|---|---|---|---|---|---|---|---|
| | 01.01.1901 -> 01.01.3000 | | | | Note: 2822790300A | | | | |
| 1 | | | 0322790302B | 1.00 | FLANGIA | FLANGE | FLASQUE | FLANSCH | BRIDA |
| 1 | | | 0322790722C | 1.00 | FLANGIA | FLANGE | FLASQUE | FLANSCH | BRIDA |
| 2 | | | 0322790304F | 1.00 | FRENO | BRAKE | FREIN | BREMSE | FRENO |
| 3 | | | 0000622018B | 1.00 | SFERA ACCIAIO | STEEL BALL | BILLE EN ACIER | STAHLKUGEL | ESFERA ACERO |
| 4 | | | 2722790305L | 1.00 | BLOCCAGGIO | LOCKING DEVICE | BLOCAGE | SPERRE | BLOQUEO |
| 5 | | | 0000645048C | 1.00 | LINGUETTA | FEATHER KEY | LANGUETTE | FEDERKEIL | LINGUETA |
| 6 | | | 0322790307C | 1.00 | PIGNONE | SPROCKET | PIGNON | RITZEL | PIÑON |
| 7 | | | 0322790303D | 1.00 | VITE | SCREW | VIS | SCHRAUBE | TORNILLO |
| 8 | | | 0322790301L | 1.00 | SLITTA | SLIDE | COULISSE | SCHLITTEN | CORREDERA |
| 8 | | | 0322790721A | 1.00 | SLITTA | SLIDE | COULISSE | SCHLITTEN | CORREDERA |
| 9 | | | 0321990020C | 1.00 | CONTROFLANGIA | COUNTERFLANGE | CONTRE-BRIDE | GEGENFLANSCH | CONTRABRIDA |
| 10 | | | 0000617680H | 2.00 | MOLLA TAZZA | SPRING | RESSORT | FEDER | RESORTE |
| 11 | | | 0321990021E | 1.00 | DISCO | DISC | DISQUE | SCHEIBE | DISCO |
| 12 | | | 0000613045G | 5.00 | RALLA | WASHER | CRAPAUDINE | SCHEIBE | RANGUA |
| 13 | | | 0000644037H | 1.00 | ANELLO SEEGER | CIRCLIP | CIRCLIP | SEEGERRING | SEEGER |
| 14 | | | 0000613041H | 2.00 | GABBIA A RULLINI | ROLLER CAGE | CAGE A ROULEAUX | WALZENKAEFIG | COJINETE |
| 15 | | | 0316330020C | 1.00 | RONDELLA | WASHER | RONDELLE | SCHEIBE | ARANDELA |
| 16 | | | 0321990066A | 2.00 | DISCO | DISC | DISQUE | SCHEIBE | DISCO |
| 17 | | | 0000307020C | 2.00 | SPINA | PIN | CHEVILLE | STIFT | CLAVIJA |
| 18 | | | 0321990063D | 2.00 | BOCCOLA | BUSHING | DOUILLE | BUCHSE | CASQUILLO |
| 19 | | | 0321990065H | 2.00 | BULLONE | BOLT | BOULON | MUTTER | PERNO |
| 20 | | | 0317542101D | 2.00 | MOLLA | SPRING | RESSORT | FEDER | RESORTE |
| 21 | | | 0321990064F | 2.00 | PERNO | PIN | PIVOT | BOLZEN | PERNO |

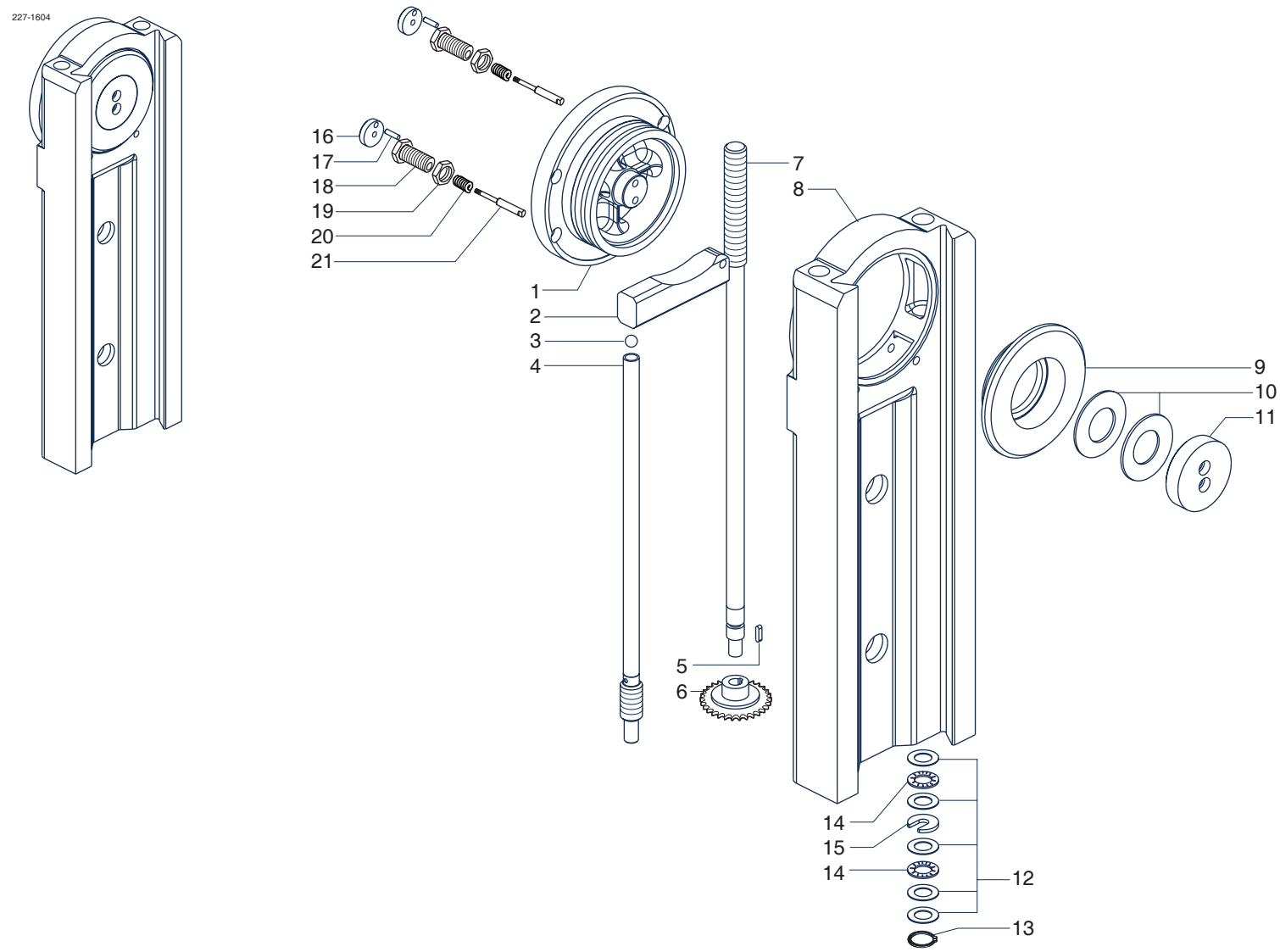


| | | | |
|---|---|---|---|
| scm | SUPERSET XL | SLITTA VERTICALE PER UNIVERSALE - (01.01.1901 -> - p.20,06,2007)<br>VERTICAL SLIDE FOR UNIVERSAL SPINDLE - GLISSIERE VERTICALE (ARBRE UNIVERSEL)<br>VERTIKALSCHLITTEN (UNIVERSALWELLE) - TRINEO VERTICAL PARA UNIVERSAL | 227-1604-0 |

| N | P | C | CODICE | Q.TY | DENOMINAZIONE | DESCRIPTION | DESIGNATION | BEZEICHNUNG | DENOMINACION |
|---|---|---|---|---|---|---|---|---|---|
| | 01.01.1901 -> 01.01.3000 | | | | Note: 2822790320C | | | | |
| | 1 | | 0000629131H | 1.00 | FORCELLA | FORK | FOURCHE | GABEL | HORQUILLA |
| | 1 | | 0000629141L | 1.00 | FORCELLA X CIL. | FORCELLA X CIL. PNEUMATIC | FORCELLA X CIL. CYLINDRE | FORCELLA X CIL. PNEUMATIK | FORCELLA X CIL. CIL.NEUM. |
| | 2 | | 0001501464C | 1.00 | CILINDRO PNEUMATICO | PNEUMATIC CYLINDER | CYLINDRE PNEUM. | PN.ZYLINDER | STANDARD |
| | 3 | | 0322790310H | 1.00 | SUPPORTO | SUPPORT | SUPPORT | STUETZE | SOPORTE |
| | 4 | | 0322790309G | 1.00 | MORSETTO | CLAMP | ETAU | KLEMMELEMENT | MORDAZA |
| | 5 | | 0322790306A | 1.00 | MADREVITE | NUT SCREW | VIS-MERE | MUTTERGEWINDE | TUERCA |
| | 6 | | 0000602865D | 1.00 | CATENA | ROLLER CHAIN | CHAINE A ROULEAUX | ROLLENKETTE | CADENA ROD. |
| | 7 | | 0000613045G | 1.00 | RALLA | WASHER | CRAPAUDINE | SCHEIBE | RANGUA |
| | 8 | | 0522790308L | 1.00 | PIGNONE | SPROCKET | PIGNON | RITZEL | PIÑON |
| | 9 | | 0000644268H | 1.00 | ANELLO SEEGER | CIRCLIP | CIRCLIP | SEEGERRING | SEEGER |
| | 10 | | 0000601060D | 1.00 | BOCCOLA | BUSHING | DOUILLE | BUCHSE | CASQUILLO |
| | 11 | | 0001502104A | 1.00 | VALVOLA | VALVE | VALVE | VENTIL | VALVULA |
| | 12 | | 0322775019C | 1.00 | TARGA | PLATE | PLAQUE | SCHILD | TARJETA |

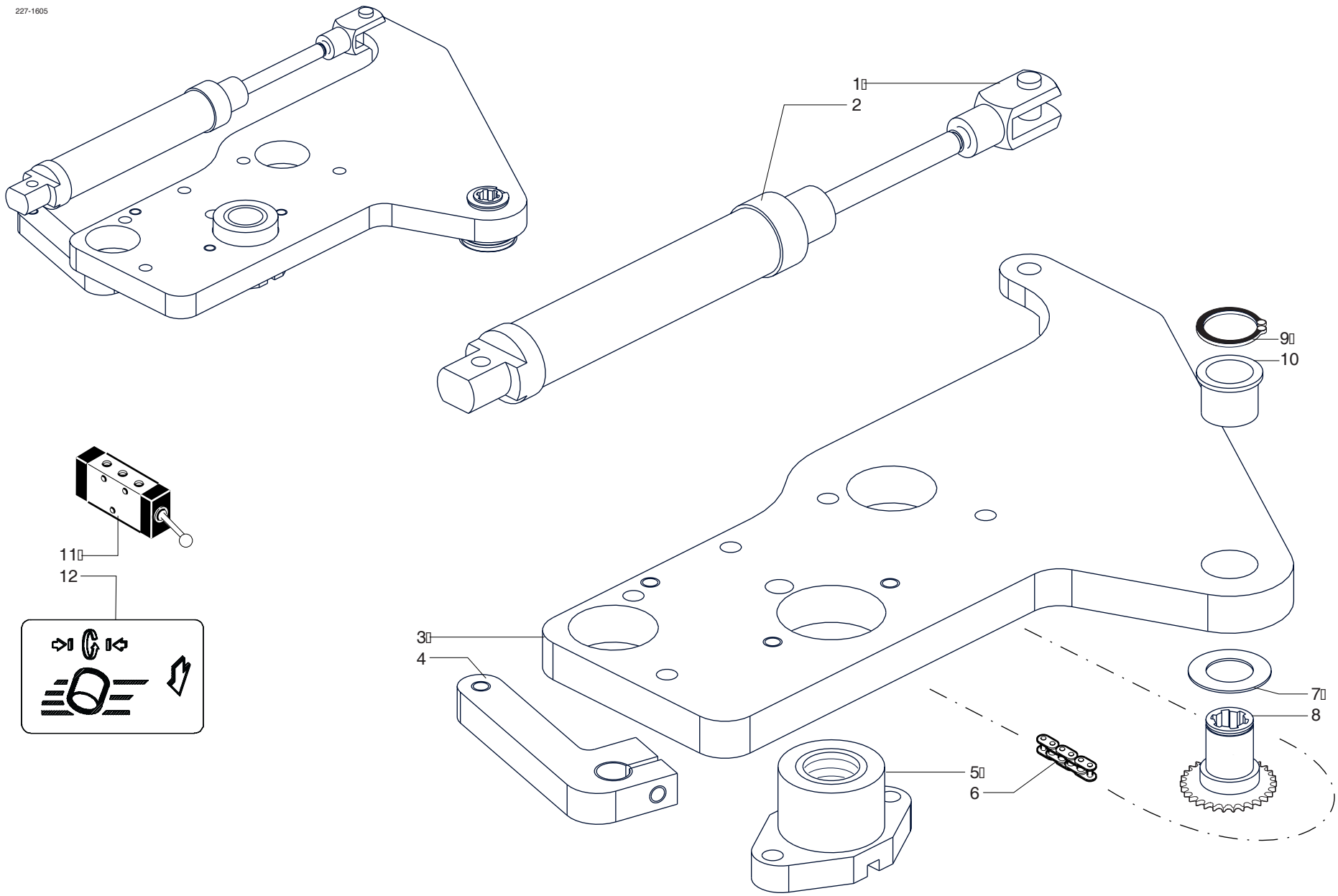


| | | | |
|---|---|---|---|
| scm | SUPERSET XL | RINVIO ROTAZ. E BLOCCAGGIO UNIVERS. - (01.01.1901 -> - p.20,06,2007)<br>ROTATION TRANS. AND LOCKING(UNIV.HEAD) - RENVOI ROTATION-BLOCAGE ARBRE UNIV.<br>DREHUNGSVORGELEGE-BLOCK. UNIVERSALWELLE - REENVIO ROTAC. Y BLOQUEO UNIV. | 227-1605-0 |

| scm | SUPERSET XL | ALBERO GRUPPO UNIVERSALE - (p.20,06,2007)<br>UNIVERSAL SPINDLE - ARBRE GROUPE UNIVERSEL<br>UNIVERSALWELLE - EJE GRUPO UNIVERSAL | 227-1606-0 |
|---|---|---|---|

| N | P | C | CODICE | Q.TY | DENOMINAZIONE | DESCRIPTION | DESIGNATION | BEZEICHNUNG | DENOMINACION |
|---|---|---|---|---|---|---|---|---|---|
| | 01.01.1901 -> 01.01.3000 | | | | Note: 2822790410D | | | | |
| 1 | | | 0000308566C | 1.00 | VITE | SCREW | VIS | SCHRAUBE | TORNILLO |
| 2 | | | 0327430300B | 1.00 | RONDELLA | WASHER | RONDELLE | SCHEIBE | ARANDELA |
| 3 | | | 0316036400C | 1.00 | ANELLO CON DENTATURA D=40 | RING | BAGUE | RING | ANILLO |
| 3 | | | 0516036600B | 1.00 | ANELLO CON DENTATURA D=35 | RING | BAGUE | RING | ANILLO |
| 4 | | | 0319433349C | 1.00 | GHIERA | RING NUT | EMBOUT | NUTMUTTER | COLLAR |
| 4 | | | 0319433350D | 1.00 | GHIERA | RING NUT | EMBOUT | NUTMUTTER | COLLAR |
| 5 | | | 0319433348A | 1.00 | ANELLO | RING | BAGUE | RING | ANILLO |
| 5 | | | 0319433356G | 1.00 | ANELLO | RING | BAGUE | RING | ANILLO |
| 6 | | | 0000606139H | 1.00 | CUSCINETTO | BEARING | ROULEMENT | LAGER | COJINETE |
| 6 | | | 0000606170C | 2.00 | CUSCINETTO | BEARING | ROULEMENT | LAGER | COJINETE |
| 6 | | | 0000609068A | 1.00 | CUSCINETTO | BEARING | ROULEMENT | LAGER | COJINETE |
| 6 | | | 0766547299B | 2.00 | CUSCINETTO | BEARING | ROULEMENT | LAGER | COJINETE |
| 7 | | | 0319435763C | 1.00 | ALBERO TOUPIE D=35 | SPINDLE | ARBRE | FRAESSPINDEL | EJE |
| 7 | | | 0319435767B | 1.00 | ALBERO | SHAFT | ARBRE | WELLE | EJE |
| 7 | | | 0319435775H | 1.00 | ALBERO | SHAFT | ARBRE | WELLE | EJE |
| 7 | | | 0319435779G | 1.00 | ALBERO | SHAFT | ARBRE | WELLE | EJE |
| 8 | | | 0311190400L | 1.00 | CILINDRO | CYLINDER | CYLINDRE | ZYLINDER | CILINDRO |
| 8 | | | 0322790404H | 1.00 | CILINDRO | CYLINDER | CYLINDRE | ZYLINDER | CILINDRO |
| 9 | | | 0000617759G | 4.00 | MOLLA TAZZA | SPRING | RESSORT | TELLERFEDER | RESORTE |
| 10 | | | 0000645169L | 1.00 | LINGUETTA | FEATHER KEY | LANGUETTE | FEDERKEIL | LINGUETA |
| 11 | | | 0319435570C | 1.00 | DISTANZIALE | SPACER | ENTRETOISE | DISTANZSTUECK | DISTANCIADOR |
| 12 | | | 0000606165C | 1.00 | CUSCINETTO | BEARING | ROULEMENT | LAGER | COJINETE |
| 12 | | | 0766547298L | 1.00 | CUSCINETTO | BEARING | ROULEMENT | LAGER | COJINETE |
| 13 | | | 0321990026F | 1.00 | PULEGGIA CONDOTTA | PULLEY | POULIE | RIEMENSCHEIBE | POLEA |
| 13 | | | 0321990086C | 1.00 | PULEGGIA CONDOTTA | PULLEY | POULIE | RIEMENSCHEIBE | POLEA |
| 13 | | | 0322790411C | 1.00 | PULEGGIA | PULLEY | POULIE | RIEMENSCHEIBE | POLEA |
| 14 | | | 0319431142A | 1.00 | RONDELLA | WASHER | RONDELLE | SCHEIBE | ARANDELA |
| 15 | | | 0519433357D | 2.00 | INGRASSATORE (NIPPLO) | GREASE NIPPLE | NIPPLE | SCHMIERNIPPEL | NIPLE ENGRASADOR |

227-1606

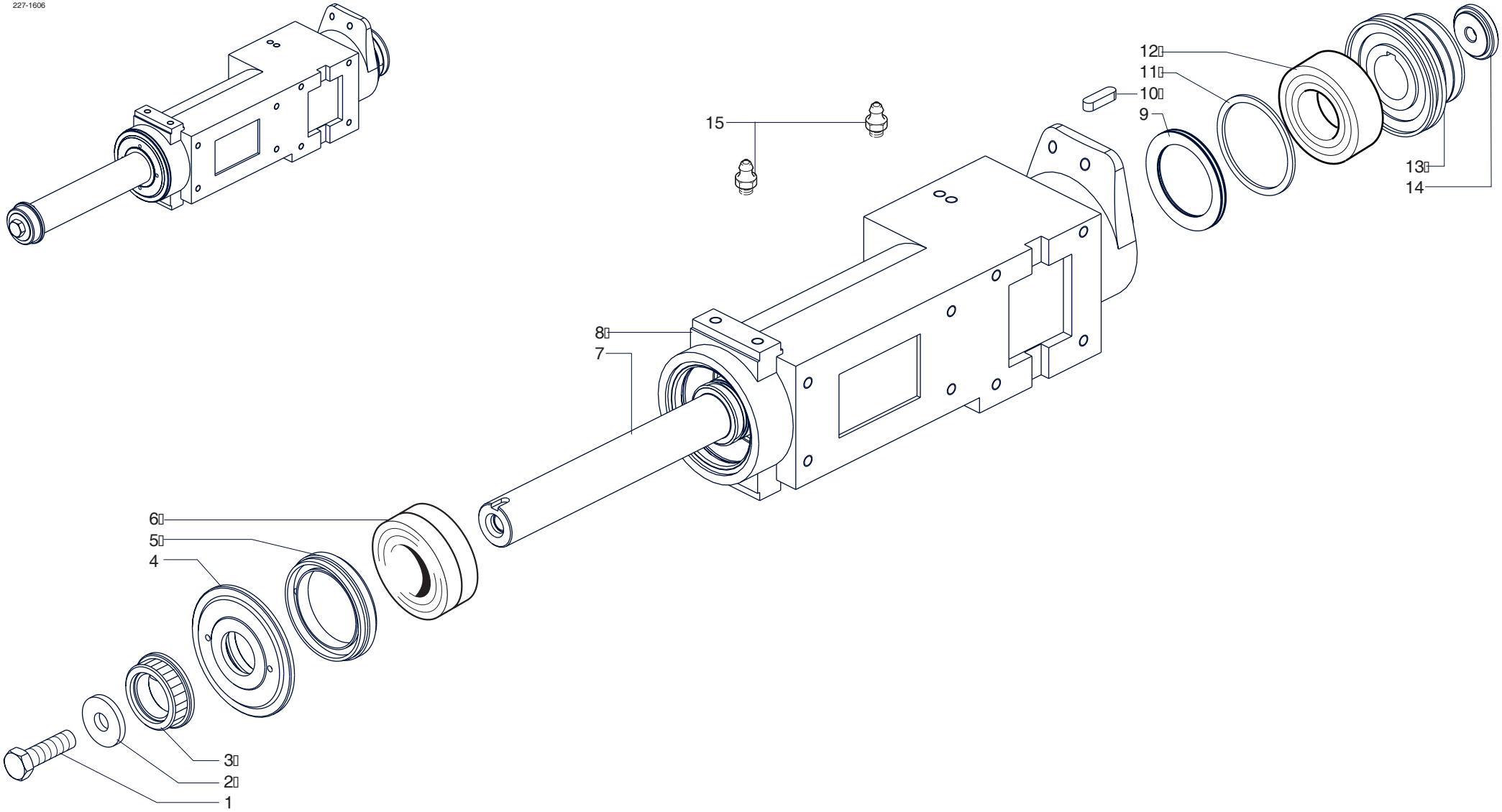


| | | | |
|---|---|---|---|
| scm | SUPERSET XL | ALBERO GRUPPO UNIVERSALE - (01.01.1901 -> - p.20,06,2007)<br>UNIVERSAL SPINDLE - ARBRE GROUPE UNIVERSEL<br>UNIVERSALWELLE - EJE GRUPO UNIVERSAL | 227-1606-0 |

| N | P | C | CODICE | Q.TY | DENOMINAZIONE | DESCRIPTION | DESIGNATION | BEZEICHNUNG | DENOMINACION |
|---|---|---|---|---|---|---|---|---|---|
| | 01.01.1901 -> 01.01.3000 | | | | Note: 5222790360G | | | | |
| | 1 | | 0322790562C | 1.00 | SQUADRETTO | SQUARE | EQUERRE | WINKEL | ESCUADRA |
| | 2 | | 0522790561E | 1.00 | CUFFIA | HOOD | HOTTE | HAUBE | CAMPANA |
| | 3 | | 0322790306A | 1.00 | MADREVITE | NUT SCREW | VIS-MERE | MUTTERGEWINDE | TUERCA |
| | 4 | | 0736234876D | 1.00 | ELETTROMANDRINO | ELECTRIC CHUCK | MANDRIN ELECTRIQUE | ELEKTROFRÄSDORN | ELECTROMANDRIL |
| | 5 | | 0000645098H | 1.00 | LINGUETTA | FEATHER KEY | LANGUETTE | FEDERKEIL | LINGUETA |
| | 6 | | 0322790363A | 1.00 | INTERFACCIA | RING NUT | EMBOUT | STELLRING | CONEXION |
| | 7 | | 0000309267L | 2.00 | VITE | SCREW | VIS | SCHRAUBE | TORNILLO |
| | 8 | | 0322790361F | 1.00 | SLITTA | SLIDE | COULISSE | SCHLITTEN | CORREDERA |
| | 9 | | 0322790362H | 1.00 | SUPPORTO | SUPPORT | SUPPORT | STUETZE | SOPORTE |

2271606x

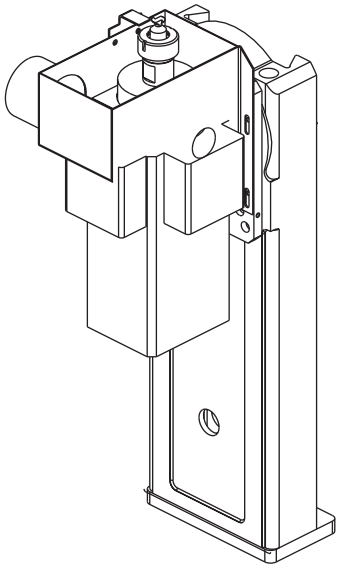

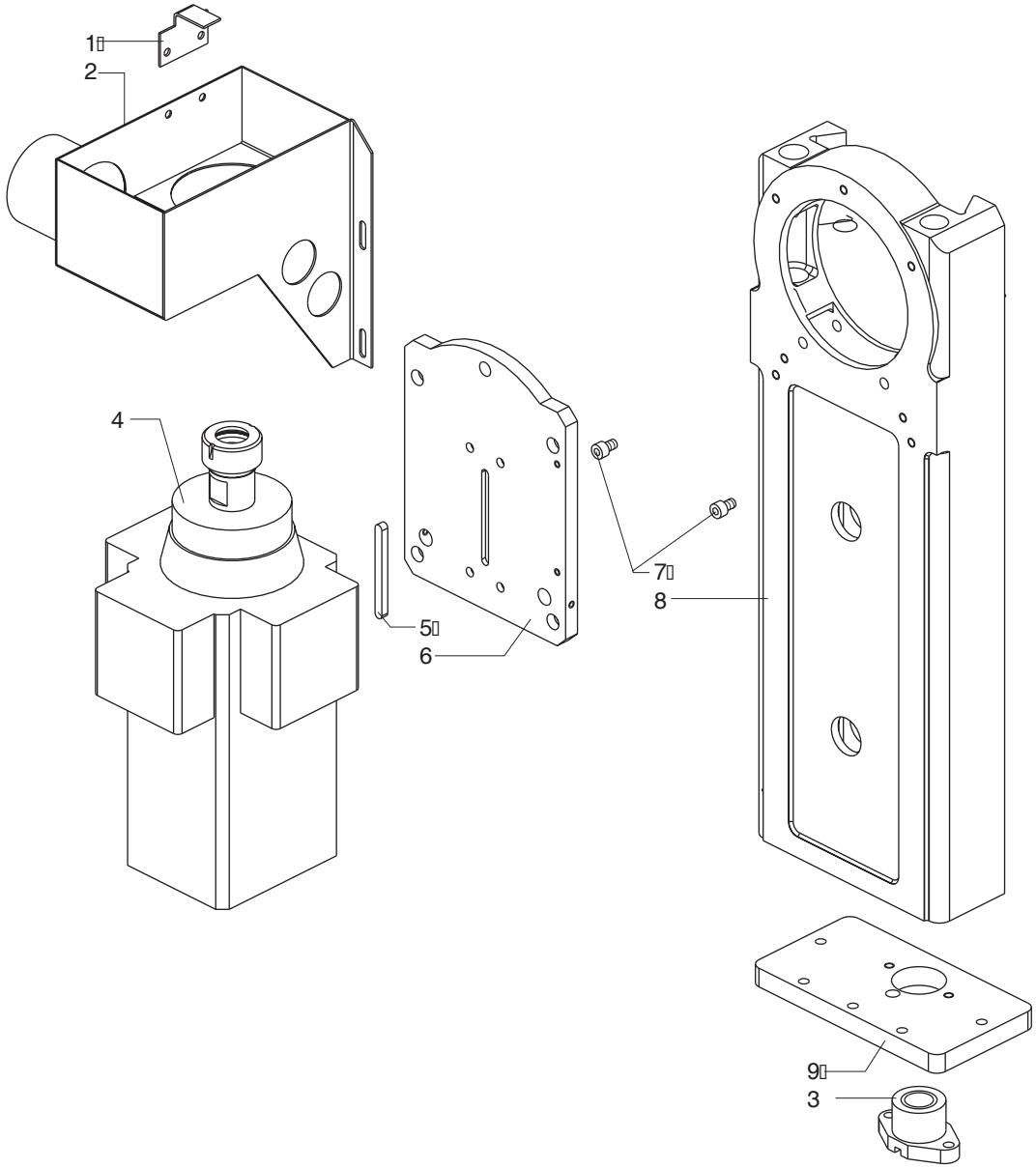


| | | | |
|---|---|---|---|
| scm | SUPERSET XL | ELETTROMANDRINO COLOMBO - (01.01.1901 -> - p.20,06,2007)<br>ELECTRIC SPINDLE (COLOMBO) - MANDRIN ELECTRIQUE (COLOMBO)<br>ELEKTROFRAESDORN (COLOMBO) - ELECTROMANDRIL (COLOMBO) | 227-1606-X |

| N | P | C | CODICE | Q.TY | DENOMINAZIONE | DESCRIPTION | DESIGNATION | BEZEICHNUNG | DENOMINACION |
|---|---|---|---|---|---|---|---|---|---|
| 01.01.1901 -> 01.01.3000 | | | | | Note: 2822790420E | | | | |
| 1 | | | 0001314108B | 1.00 | MOTORE TRIF. | 3-PH. MOTOR | 3-PH. MOTEUR | 3-PH. MOTOR | MOT.TRIFAS. |
| 1 | | | 0001314139G | 1.00 | MOTORE TRIF. | 3.PH MOTOR | 3 PH. MOTEUR | 3-PH MOTOR | MOT. TRIFAS |
| 1 | | | 0001314165B | 1.00 | MOTORE TRIF. | 3.PH MOTOR | 3 PH. MOTEUR | 3-PH MOTOR | MOT. TRIFAS |
| 1 | | | 0001314190D | 1.00 | MOTORE TRIF. | 3.PH MOTOR | 3 PH. MOTEUR | 3-DREIPHASENMOTOR | MOT. TRIFAS |
| 1 | | | 0001314551A | 1.00 | MOTORE TRIF. | 3-PH. MOTOR | 3-PH. MOTEUR | 3-PH. MOTOR | MOT.TRIFAS. |
| 1 | | | 0001315066C | 1.00 | MOTORE TRIF. | 3-PH. MOTOR | 3-PH. MOTEUR | 3-PH. MOTOR | MOT.TRIFAS. |
| 1 | | | 0001315093L | 1.00 | MOTORE TRIF. | 3-PH. MOTOR | 3-PH. MOTEUR | 3-PH. MOTOR | MOT.TRIFAS. |
| 1 | | | 0001315102L | 1.00 | MOTORE TRIF. | 3.PH MOTOR | 3 PH. MOTEUR | 3-PH MOTOR | MOT. TRIFAS |
| 1 | | | 0001315105F | 1.00 | MOTORE TRIF. | 3.PH MOTOR | 3 PH. MOTEUR | 3-PH MOTOR | MOT. TRIFAS |
| 1 | | | 0001315115G | 1.00 | MOTORE TRIF. | 3.PH MOTOR | 3 PH. MOTEUR | 3-DREIPHASENMOTOR | MOT. TRIFAS |
| 1 | | | 0001315118D | 1.00 | MOTORE TRIF. | 3.PH MOTOR | 3 PH. MOTEUR | 3-PH MOTOR | MOT. TRIFAS |
| 1 | | | 0001315132C | 1.00 | MOTORE TRIF. | 3.PH. MOTOR | 3 PH. MOTEUR | 3-DREIPHASENMOTOR | MOT. TRIFAS |
| 1 | | | 0001315135L | 1.00 | MOTORE TRIF. | 3.PH MOTOR | 3 PH. MOTEUR | 3-PH MOTOR | MOT. TRIFAS |
| 1 | | | 0001315152E | 1.00 | MOTORE TRIF. | 3.PH MOTOR | 3 PH. MOTEUR | 3-DREIPHASENMOTOR | MOT. TRIFAS |
| 1 | | | 0001315154L | 1.00 | MOTORE TRIF. | 3.PH MOTOR | 3 PH. MOTEUR | 3-DREIPHASENMOTOR | MOT. TRIFAS |
| 1 | | | 0001315156D | 1.00 | MOTORE TRIF. | 3-PH. MOTOR | 3-PH. MOTEUR | 3-PH. MOTOR | MOT.TRIFAS. |
| 1 | | | 0001315197A | 1.00 | MOTORE TRIF. | 3.PH MOTOR | 3 PH. MOTEUR | 3-PH MOTOR | MOT. TRIFAS |
| 1 | | | 0001315222D | 1.00 | MOTORE TRIF. | 3.PH MOTOR | 3 PH. MOTEUR | 3-PH MOTOR | MOT. TRIFAS |
| 1 | | | 0001315232E | 1.00 | MOTORE TRIF. | 3-PH. MOTOR | 3-PH. MOTEUR | 3-PH. MOTOR | MOT.TRIFAS. |
| 1 | | | 0001315234L | 1.00 | MOTORE TRIF. | 3-PH. MOTOR | 3-PH. MOTEUR | 3-PH. MOTOR | MOT.TRIFAS. |
| 1 | | | 0001315235B | 1.00 | MOTORE TRIF. | 3-PH. MOTOR | 3-PH. MOTEUR | 3-PH. MOTOR | MOT.TRIFAS. |
| 1 | | | 0001315236D | 1.00 | MOTORE TRIF. | 3-PH. MOTOR | 3-PH. MOTEUR | 3-PH. MOTOR | MOT.TRIFAS. |
| 1 | | | 0001331089B | 1.00 | MOTORE TRIF. FRENO C.C. | 3-PH. MOTOR C.C. BRAKE | 3-PH. MOTEUR FREIN C.C. | 3-PH. MOTOR C.C. BREMSE | MOT.TRIFAS.FR.C.C. |
| 1 | | | 0001331094B | 1.00 | MOTORE TRIF. FRENO C.C. | 3-PH. MOTOR C.C. BRAKE | 3-PH. MOTEUR FREIN C.C. | 3-PH. MOTOR C.C. BREMSE | MOT.TRIFAS.FR.C.C. |
| 1 | | | 0001331095D | 1.00 | MOTORE TRIF. FRENO C.C. | 3-PH. MOTOR C.C. BRAKE | 3-PH. MOTEUR FREIN C.C. | 3-PH. MOTOR C.C. BREMSE | MOT.TRIFAS.FR.C.C. |
| 1 | | | 0001331096F | 1.00 | MOTORE TRIF. FRENO C.C. | 3-PH. MOTOR C.C. BRAKE | 3-PH. MOTEUR FREIN C.C. | 3-PH. MOTOR C.C. BREMSE | MOT.TRIFAS.FR.C.C. |
| 1 | | | 0001331097H | 1.00 | MOTORE TRIF. FRENO C.C. | 3-PH. MOTOR C.C. BRAKE | 3-PH. MOTEUR FREIN C.C. | 3-PH. MOTOR C.C. BREMSE | MOT.TRIFAS.FR.C.C. |
| 1 | | | 0001331098A | 1.00 | MOTORE TRIF. FRENO C.C. | 3-PH. MOTOR C.C. BRAKE | 3-PH. MOTEUR FREIN C.C. | 3-PH. MOTOR C.C. BREMSE | MOT.TRIFAS.FR.C.C. |
| 1 | | | 0001331099C | 1.00 | MOTORE TRIF. FRENO C.C. | 3-PH. MOTOR C.C. BRAKE | 3-PH. MOTEUR FREIN C.C. | 3-PH. MOTOR C.C. BREMSE | MOT.TRIFAS.FR.C.C. |
| 1 | | | 0001331101G | 1.00 | MOTORE TRIF. FRENO C.C. | 3-PH. MOTOR C.C. BRAKE | 3-PH. MOTEUR FREIN C.C. | 3-PH. MOTOR C.C. BREMSE | MOT.TRIFAS.FR.C.C. |
| 1 | | | 0001331109E | 1.00 | MOTORE TRIF. FRENO C.C. | 3-PH. MOTOR C.C. BRAKE | 3-PH. MOTEUR FREIN C.C. | 3-PH. MOTOR C.C. BREMSE | MOT.TRIFAS.FR.C.C. |
| 1 | | | 0001331113C | 1.00 | MOTORE TRIF. FRENO C.C. | 3-PH. MOTOR C.C. BRAKE | 3-PH. MOTEUR FREIN C.C. | 3-PH. MOTOR C.C. BREMSE | MOT.TRIFAS.FR.C.C. |
| 1 | | | 0001331174B | 1.00 | MOTORE TRIF. FRENO C.C. | 3-PH. MOTOR D.C. BRAKE | 3-PH. MOTEUR FREIN C.C. | 3-PH. MOTOR G.S. BREMSE | MOT.TRIFAS.FR.C.C. |
| 1 | | | 0001331177H | 1.00 | MOTORE TRIF. FRENO C.C. | 3-PH. MOTOR D.C. BRAKE | MOTEUR 3-PH . FREIN C.C | 3-PH. MOTOR G.S. BREMSE | MOT. TRIFAS. FR. C.C. |
| 1 | | | 0001331178A | 1.00 | MOTORE TRIF. FRENO C.C. | 3-PH. MOTOR D.C. BRAKE | MOTEUR 3-PH . FREIN C.C | 3-PH. MOTOR G.S. BREMSE | MOT. TRIFAS. FR. C.C. |
| 1 | | | 0001331179C | 1.00 | MOTORE TRIF. FRENO C.C. | 3-PH. MOTOR D.C. BRAKE | MOTEUR 3-PH . FREIN C.C | 3-PH. MOTOR G.S. BREMSE | MOT. TRIFAS. FR. C.C. |
| 1 | | | 0001331200G | 1.00 | MOTORE TRIF. FRENO C.C. | 3-PH. MOTOR D.C. BRAKE | MOTEUR 3-PH . FREIN C.C | 3-PH. MOTOR G.S. BREMSE | MOT. TRIFAS. FR. C.C. |
| 1 | | | 0001331250C | 1.00 | MOTORE TRIF. FRENO C.C. | 3-PH. MOTOR D.C. BRAKE | MOTEUR 3-PH . FREIN C.C | 3-PH. MOTOR G.S. BREMSE | MOT. TRIFAS. FR. C.C. |
| 1 | | | 0001331253L | 1.00 | MOTORE TRIF. FRENO C.C. | 3-PH. MOTOR D.C. BRAKE | MOTEUR 3-PH . FREIN C.C | 3-PH. MOTOR G.S. BREMSE | MOT. TRIFAS. FR. C.C. |

| N | P | C | CODICE | Q.TY | DENOMINAZIONE | DESCRIPTION | DESIGNATION | BEZEICHNUNG | DENOMINACION |
|---|---|---|---|---|---|---|---|---|---|
| | 1 | | 0001331254B | 1.00 | MOTORE TRIF. FRENO C.C. | 3-PH. MOTOR D.C. BRAKE | MOTEUR 3-PH . FREIN C.C | 3-PH. MOTOR G.S. BREMSE | MOT. TRIFAS. FR. C.C. |
| | 1 | | 0001331255D | 1.00 | MOTORE TRIF. FRENO C.C. | 3-PH. MOTOR D.C. BRAKE | MOTEUR 3-PH . FREIN C.C | 3-PH. MOTOR G.S. BREMSE | MOT. TRIFAS. FR. C.C. |
| | 1 | | 0001331256F | 1.00 | MOTORE TRIF. FRENO C.C. | 3-PH. MOTOR D.C. BRAKE | MOTEUR 3-PH . FREIN C.C | 3-PH. MOTOR G.S. BREMSE | MOT. TRIFAS. FR. C.C. |
| | 1 | | 0001331270E | 1.00 | MOTORE TRIF. FRENO C.C. | 3-PH. MOTOR D.C. BRAKE | 3-PH. MOTEUR FREIN C.C. | 3-PH. MOTOR G.S. BREMSE | MOT.TRIFAS.FR.C.C. |
| | 1 | | 0001331273B | 1.00 | MOTORE TRIF. FRENO C.C. | 3-PH. MOTOR D.C. BRAKE | MOTEUR 3-PH . FREIN C.C | 3-PH. MOTOR G.S. BREMSE | MOT. TRIFAS. FR. C.C. |
| | 1 | | 0001331274D | 1.00 | MOTORE TRIF. FRENO C.C. | 3-PH. MOTOR D.C. BRAKE | MOTEUR 3-PH . FREIN C.C | 3-PH. MOTOR G.S. BREMSE | MOT. TRIFAS. FR. C.C. |
| | 1 | | 0001331275F | 1.00 | MOTORE TRIF. FRENO C.C. | 3-PH. MOTOR D.C. BRAKE | 3-PH. MOTEUR FREIN C.C. | 3-PH. MOTOR G.S. BREMSE | MOT.TRIFAS.FR.C.C. |
| | 1 | | 0001331276H | 1.00 | MOTORE TRIF. FRENO C.C. | 3-PH. MOTOR D.C. BRAKE | MOTEUR 3-PH . FREIN C.C | 3-PH. MOTOR G.S. BREMSE | MOT. TRIFAS. FR. C.C. |
| | 1 | | 0001334185H | 1.00 | MOTORE TRIF. | 3.PH. MOTOR | 3 PH. MOTEUR | 3-DREIPHASENMOTOR | MOT. TRIFAS |
| | 1 | | 0001334198F | 1.00 | MOTORE TRIF. | 3.PH MOTOR | 3 PH. MOTEUR | 3-DREIPHASENMOTOR | MOT. TRIFAS |
| | 1 | | 0001336313C | 1.00 | MOTORE TRIF. | 3-PH. MOTOR | 3-PH. MOTEUR | 3-PH. MOTOR | MOT.TRIFAS. |
| | 1 | | 0001336315G | 1.00 | MOTORE ELETTRICO | ELECTRIC MOTOR | MOTEUR ELECTRIQUE | ELEKTRISCHER | MOTOR ELECTRICO |
| | 1 | | 0001337516E | 1.00 | MOTORE TRIF. | 3-PH. MOTOR | 3-PH. MOTEUR | 3-PH. MOTOR | MOT.TRIFAS. |
| | 1 | | 0001338930D | 1.00 | MOTORE TRIF. | 3.PH MOTOR | 3 PH. MOTEUR | 3-DREIPHASENMOTOR | MOT. TRIFAS |
| | 1 | | 0001338959F | 1.00 | MOTORE TRIF. FRENO C.C. | 3-PH. MOTOR C.C. BRAKE | 3-PH. MOTEUR FREIN C.C. | 3-PH. MOTOR C.C. BREMSE | MOT.TRIFAS.FR.C.C. |
| | 1 | | 0001338960G | 1.00 | MOTORE TRIF. FRENO C.C. | 3-PH. MOTOR C.C. BRAKE | 3-PH. MOTEUR FREIN C.C. | 3-PH. MOTOR C.C. BREMSE | MOT.TRIFAS.FR.C.C. |
| | 1 | | 0001338961L | 1.00 | MOTORE TRIF. FRENO C.C. | 3-PH. MOTOR C.C. BRAKE | 3-PH. MOTEUR FREIN C.C. | 3-PH. MOTOR C.C. BREMSE | MOT.TRIFAS.FR.C.C. |
| | 1 | | 0001338965H | 1.00 | MOTORE TRIF. FRENO C.C. | 3-PH. MOTOR C.C. BRAKE | 3-PH. MOTEUR FREIN C.C. | 3-PH. MOTOR C.C. BREMSE | MOT.TRIFAS.FR.C.C. |
| | 1 | | 0001338987E | 1.00 | MOTORE TRIF. | 3-PH. MOTOR | 3-PH. MOTEUR | 3-PH. MOTOR | MOT.TRIFAS. |
| | 1 | | 0001338988G | 1.00 | MOTORE TRIF. | 3-PH. MOTOR | 3-PH. MOTEUR | 3-PH. MOTOR | MOT.TRIFAS. |
| | 1 | | 0001338994L | 1.00 | MOTORE TRIF. | 3.PH MOTOR | 3 PH. MOTEUR | 3-DREIPHASENMOTOR | MOT. TRIFAS |
| | 1 | | 0001338996D | 1.00 | MOTORE TRIF. FRENO C.C. | 3-PH. MOTOR D.C. BRAKE | MOTEUR 3-PH . FREIN C.C | 3-PH. MOTOR G.S. BREMSE | MOT. TRIFAS. FR. C.C. |
| | 1 | | 0001338997F | 1.00 | MOTORE TRIF. FRENO C.C. | 3-PH. MOTOR D.C. BRAKE | MOTEUR 3-PH . FREIN C.C | 3-PH. MOTOR G.S. BREMSE | MOT. TRIFAS. FR. C.C. |
| | 1 | | 0001338998H | 1.00 | MOTORE TRIF. | 3-PH. MOTOR | 3-PH. MOTEUR | 3-PH. MOTOR | MOT.TRIFAS. |
| | 1 | | 0001339195E | 1.00 | MOTORE TRIF. | 3-PH. MOTOR | 3-PH. MOTEUR | 3-PH. MOTOR | MOT.TRIFAS. |
| | 1 | | 0001339776H | 1.00 | MOTORE TRIF. FRENO C.C. | 3-PH. MOTOR D.C. BRAKE | MOTEUR 3-PH . FREIN C.C | 3-PH. MOTOR G.S. BREMSE | MOT. TRIFAS. FR. C.C. |
| | 1 | | 0001339788D | 1.00 | MOTORE TRIF. | 3-PH. MOTOR | 3-PH. MOTEUR | 3-PH. MOTOR | MOT.TRIFAS. |
| | 1 | | 0001339789F | 1.00 | MOTORE TRIF. FRENO C.C. | 3-PH. MOTOR C.C. BRAKE | 3-PH. MOTEUR FREIN C.C. | 3-PH. MOTOR C.C. BREMSE | MOT.TRIFAS.FR.C.C. |
| | 1 | | 0001339790G | 1.00 | MOTORE TRIF. FRENO C.C. | 3-PH. MOTOR C.C. BRAKE | 3-PH. MOTEUR FREIN C.C. | 3-PH. MOTOR C.C. BREMSE | MOT.TRIFAS.FR.C.C. |
| | 1 | | 0001339791L | 1.00 | MOTORE TRIF. | 3-PH. MOTOR | 3-PH. MOTEUR | 3-PH. MOTOR | MOT.TRIFAS. |
| | 2 | | 0311190454D | 1.00 | PULEGGIA MOTRICE RPM=4000 | PULLEY | POULIE | RIEMENSCHEIBE | POLEA |
| | 2 | | 0321990027H | 1.00 | PULEGGIA MOTRICE | PULLEY | POULIE | RIEMENSCHEIBE | POLEA |
| | 2 | | 0321990028A | 1.00 | PULEGGIA MOTRICE | PULLEY | POULIE | RIEMENSCHEIBE | POLEA |
| | 2 | | 0321990029C | 1.00 | PULEGGIA MOTRICE | PULLEY | POULIE | RIEMENSCHEIBE | POLEA |
| | 2 | | 0321990030D | 1.00 | PULEGGIA MOTRICE | PULLEY | POULIE | RIEMENSCHEIBE | POLEA |
| | 2 | | 0321990087E | 1.00 | PULEGGIA | PULLEY | POULIE | RIEMENSCHEIBE | POLEA |
| | 3 | | 0000310246G | 1.00 | VITE | SCREW | VIS | SCHRAUBE | TORNILLO |
| | 3 | | 0000310246G | 1.00 | VITE | SCREW | VIS | SCHRAUBE | TORNILLO |
| | 3 | | 0000310363E | 1.00 | VITE | SCREW | VIS | SCHRAUBE | TORNILLO |
| | 4 | | 0000305249G | 1.00 | RONDELLA | WASHER | RONDELLE | SCHEIBE | ARANDELA |

| N | P | C | CODICE | Q.TY | DENOMINAZIONE | DESCRIPTION | DESIGNATION | BEZEICHNUNG | DENOMINACION |
|---|---|---|---|---|---|---|---|---|---|
| | 4 | | 0000305249G | 1.00 | RONDELLA | WASHER | RONDELLE | SCHEIBE | ARANDELA |
| | 4 | | 0319431135F | 1.00 | RONDELLA | WASHER | RONDELLE | SCHEIBE | ARANDELA |
| | 5 | | 0322790403F | 1.00 | SUPPORTO | SUPPORT | SUPPORT | STUETZE | SOPORTE |
| | 6 | | 0327364600H | 1.00 | LARDONE | GIB | CONTRE-FER | STELLEISTE | HOJA |
| | 7 | | 0322790405A | 1.00 | ANTIVIBRANTE | VIBRATION DAMPER | AMORTISSEUR DE VIBRATIONS | SCHWINGUNGSDAEMPFER | ANTIVIBRANTE |
| | 8 | | 1501711500F | 1.00 | PIASTRINA | PLATE | PLAQUE | PLATTE | PLAQUITA |
| | 9 | | 2746750101H | 1.00 | INVERTER | INVERTER | INVERTER | (INVERTER) | INVERTER |
| | 9 | | 2746750102A | 1.00 | INVERTER | INVERTER | INVERTER | (INVERTER) | INVERTER |
| | 9 | | 2746750201A | 1.00 | INVERTER | INVERTER | INVERSEUR | WECHSELRICHTER | INVERTER |
| | 9 | | 2746750202C | 1.00 | INVERTER | INVERTER | INVERSEUR | WECHSELRICHTER | INVERTER |
| | 10 | | 0722740704C | 1.00 | TASTIERA | KEY BOARD | CLAVIER | TASTATUR | TECLADO |
| | 11 | | 0322790401B | 1.00 | CARTER | COVER | CARTER | DECKEL | CARTER |
| | 12 | | 0322790402D | 1.00 | CARTER | COVER | CARTER | DECKEL | CARTER |
| | 13 | | 0000603346D | 1.00 | CINGHIA | BELT | COURROIE | RIEMEN | CORREA |
| | 13 | | 0000603347F | 1.00 | CINGHIA | BELT | COURROIE | RIEMEN | CORREA |
| | 13 | | 0000603365D | 3.00 | CINGHIA TRAPEZOIDALE | V-BELT | COURROIE TRAPEZOIDALE | KEILRIEMEN | CORREA TRAPEZ. |
| | 13 | | 0000603367H | 1.00 | CINGHIA | BELT | COURROIE | RIEMEN | CORREA |
| | 13 | | 0000603783A | 1.00 | CINGHIA TRAPEZOIDALE | V-BELT | COURROIE TRAPEZOIDALE | KEILRIEMEN | CORREA TRAPEZ. |
| | 14 | | 0322790412E | 1.00 | STAFFA | BRACKET | BRIDE | BUEGEL | ABRAZADERA |
| | 15 | | 0746735003L | 1.00 | FINECORSA | MICROSWITCH | FIN DE COURSE | MIKROSCHALTER | FIN CARRERA |
| | 16 | | 0511190417A | 1.00 | SUPPORTO MOTORE | SUPPORT | SUPPORT | STUETZE | SOPORTE MOTOR |

227-1607

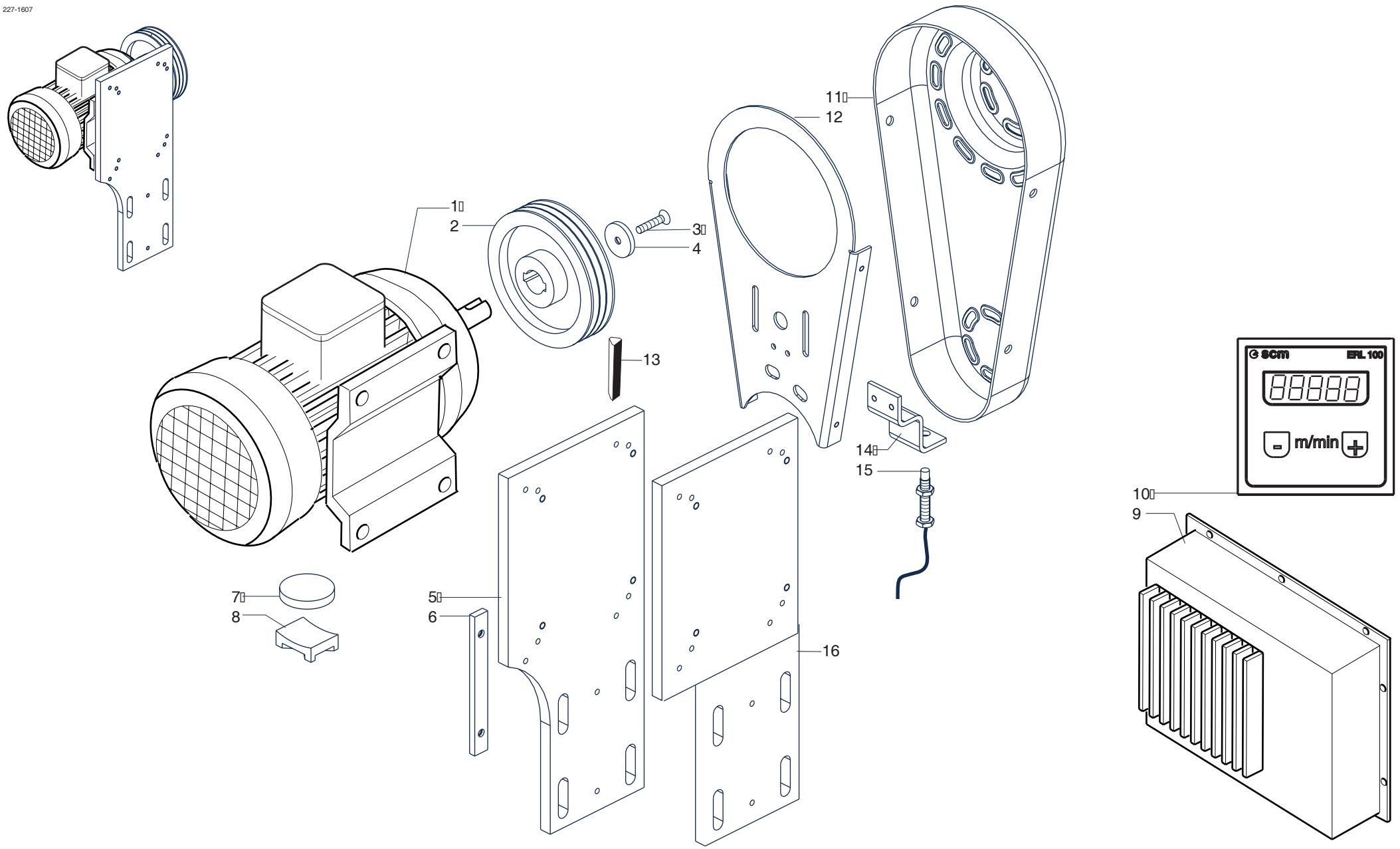


| | | | |
|---|---|---|---|
| scm | SUPERSET XL | MOTORIZZAZIONE - (01.01.1901 -> - p.20,06,2007)<br>MOTORIZATION - MOTORISATION<br>MOTORISIERUNG - MOTORIZACION | 227-1607-0 |

| scm | SUPERSET XL | SLITTA ORIZZONTALE PER UNIVERSALE - (p.20,06,2007)<br>HORIZ. SLIDE FOR UNIVERSAL HEAD UNIT - GLISSIERE HORIZONTALE (ARBRE UNIVERSEL)<br>HORIZONTALSCHLITTEN (UNIVERSALWELLE) - TRINEO HORIZONTAL PARA UNIVERSAL | 227-1608-0 |
|---|---|---|---|

| N | P | C | CODICE | Q.TY | DENOMINAZIONE | DESCRIPTION | DESIGNATION | BEZEICHNUNG | DENOMINACION |
|---|---|---|---|---|---|---|---|---|---|
| | 01.01.1901 -> 01.01.3000 | | | | Note: 2822790220A | | | | |
| | 1 | | 0322790202L | 2.00 | LARDONE | GIB | CONTRE-FER | STELLEISTE | CHAVETA |
| | 2 | | 0000316533C | 6.00 | PRIGIONIERO | STUD BOLT | PRISONNIER | STIFTSCHRAUBE | TORNILLO S.CAB. |
| | 3 | | 0000301368E | 6.00 | DADO | NUT | ECROU | MUTTER | TUERCA |
| | 4 | | 0322790201G | 1.00 | SLITTA | SLIDE | COULISSE | SCHLITTEN | CORREDERA |
| | 5 | | 0316333847B | 1.00 | MADREVITE TPN.20X5 | NUT SCREW | VIS-MERE | MUTTERGEWINDE | TUERCA |

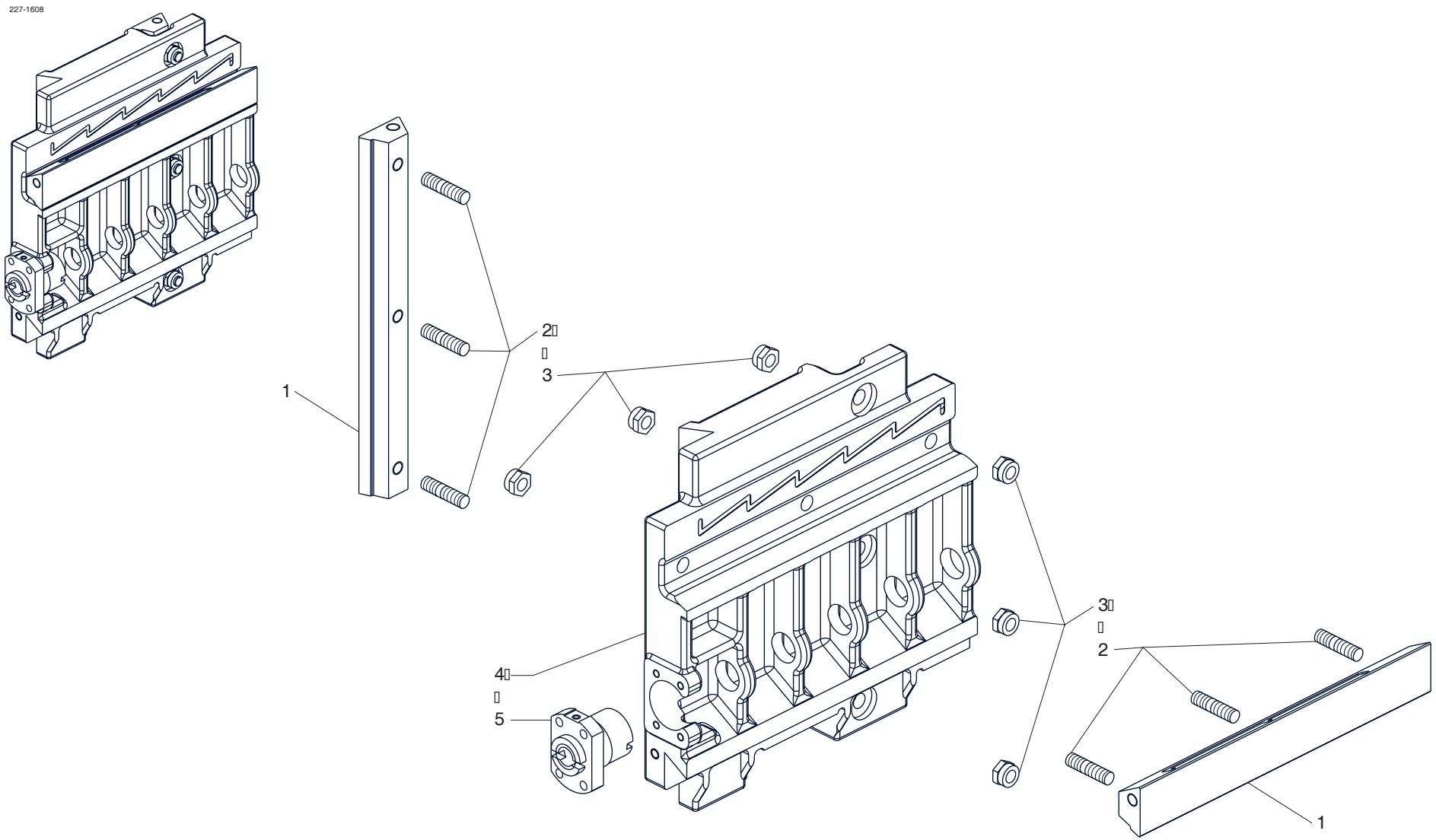


| | | | |
|---|---|---|---|
| scm | SUPERSET XL | SLITTA ORIZZONTALE PER UNIVERSALE - (01.01.1901 -> - p.20,06,2007)<br>HORIZ. SLIDE FOR UNIVERSAL HEAD UNIT - GLISSIERE HORIZONTALE (ARBRE UNIVERSEL)<br>HORIZONTALSCHLITTEN (UNIVERSALWELLE) - TRINEO HORIZONTAL PARA UNIVERSAL | 227-1608-0 |

| N | P | C | CODICE | Q.TY | DENOMINAZIONE | DESCRIPTION | DESIGNATION | BEZEICHNUNG | DENOMINACION |
|---|---|---|---|---|---|---|---|---|---|
| | 01.01.1901 -> 01.01.3000 | | | | Note: 2822790230B | | | | |
| | 1 | | 0000613034D | 4.00 | RALLA | WASHER | CRAPAUDINE | SCHEIBE | RANGUA |
| | 2 | | 0000613033B | 2.00 | GABBIA A RULLINI | ROLLER CAGE | CAGE A ROULEAUX | WALZENKAEFIG | COJINETE |
| | 3 | | 0319430904G | 1.00 | CORONA DENTATA | GEAR WHEEL | COURONNE DENTEE | ZAHNRAD | RUEDA DENTADA |
| | 4 | | 0316030500H | 1.00 | BOCCOLA | BUSHING | DOUILLE | BUCHSE | CASQUILLO |
| | 5 | | 0310130604G | 1.00 | SCATOLA DI RINVIO | TRANSFER CASE | BOITE | VORGELEGEKASTEN | CAJA |
| | 6 | | 0000645045F | 1.00 | LINGUETTA | FEATHER KEY | LANGUETTE | FEDERKEIL | LINGUETA |
| | 7 | | 0322790206H | 1.00 | VITE | SCREW | VIS | SCHRAUBE | TORNILLO |
| | 8 | | 0322790313E | 1.00 | VITE SENZA FINE | WORM | VIS SANS FIN | SCHNECKE | TORNILO SIN FIN |
| | 9 | | 0000606100E | 1.00 | CUSCINETTO | BEARING | ROULEMENT | LAGER | COJINETE |
| | 10 | | 0316031000H | 1.00 | DISTANZIALE | SPACER | ENTRETOISE | DISTANZSTUECK | DISTANCIADOR |
| | 11 | | 0000644268H | 1.00 | ANELLO SEEGER | CIRCLIP | CIRCLIP | SEEGERRING | SEEGER |
| | 12 | | 0000644043A | 1.00 | ANELLO SEEGER | CIRCLIP | CIRCLIP | SEEGERRING | SEEGER |

227-1609

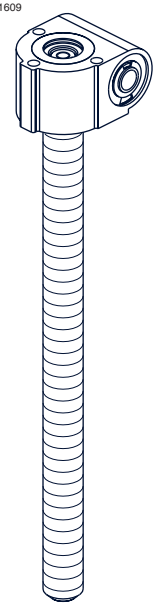

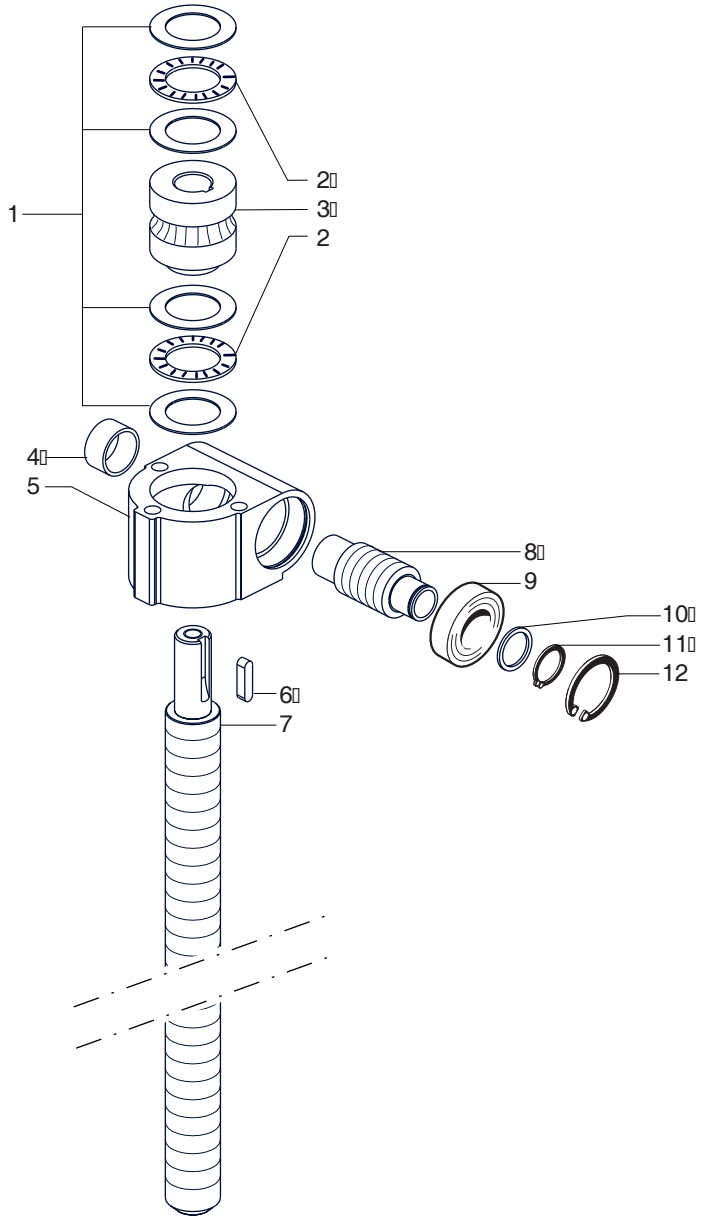


| | | | |
|---|---|---|---|
| scm | SUPERSET XL | POSIZIONAMENTO VERTICALE - (01.01.1901 -> - p.20,06,2007)<br>VERTICAL ADJUSTMENT - REGLAGE VERTICAL<br>VERTIKALVERSTELLUNG - UBICATION VERTICAL | 227-1609-0 |

| N | P | C | CODICE | Q.TY | DENOMINAZIONE | DESCRIPTION | DESIGNATION | BEZEICHNUNG | DENOMINACION |
|---|---|---|---|---|---|---|---|---|---|
| | 01.01.1901 -> 01.01.3000 | | | | Note: 2822790240C | | | | |
| | 1 | | 0000644036F | 1.00 | ANELLO SEEGER | CIRCLIP | CIRCLIP | SEEGERRING | SEEGER |
| | 2 | | 0322790209E | 1.00 | RASCHIATORE | SCRAPER | RACLOIR | ABSTREIFER | RASCADOR |
| | 3 | | 0522790205A | 1.00 | SUPPORTO | SUPPORT | SUPPORT | STUETZE | SOPORTE |
| | 4 | | 0322790204D | 2.00 | INGRANAGGIO | GEAR | ENGRENAGE | ZAHNRAD | ENGRANAJE |
| | 5 | | 0000606100E | 2.00 | CUSCINETTO | BEARING | ROULEMENT | LAGER | COJINETE |
| | 6 | | 0000644043A | 2.00 | ANELLO SEEGER | CIRCLIP | CIRCLIP | SEEGERRING | SEEGER |
| | 7 | | 0322790203B | 1.00 | BARRA | BAR | BARRE | STANGE | BARRA |

227-1610

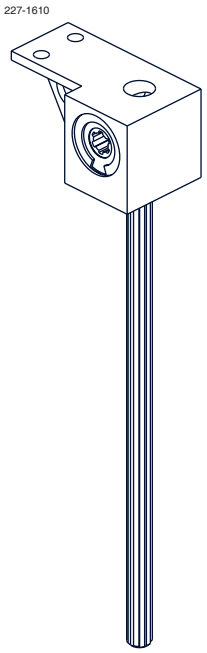

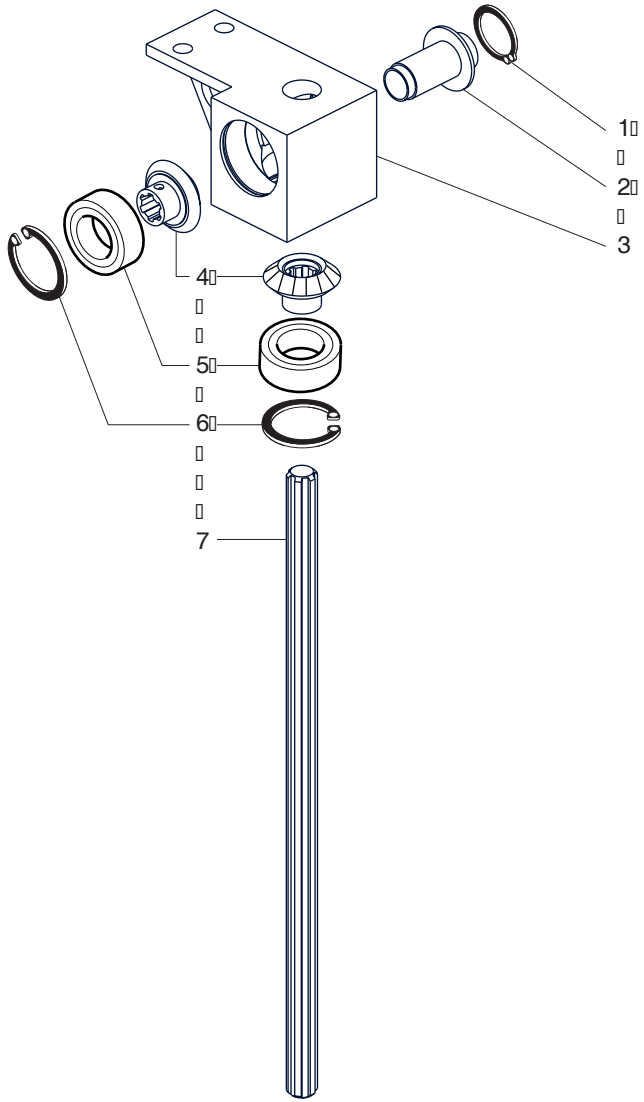


| | | | |
|---|---|---|---|
| scm | SUPERSET XL | PRIMO RINVIO X ROTAZIONE UNIVERSALE - (01.01.1901 -> - p.20,06,2007)<br>1 TRANSMISSION FOR UNIV.SPINDLE ROTATION - 1 ER RENVOI ROTATION ARBRE UNIVERSEL<br>1 VORGELEGE (UNIVERSALWELLENDREHUNG) - PRIMER REENVIO X ROTACION UNIVERSAL | 227-1610-0 |

| scm | SUPERSET XL | CUFFIA D'ASPIRAZIONE - (p.20,06,2007)<br>SUCTION HOOD - HOTTE D'ASPIRATION<br>ABSAUGHAUBE - CAMPANA DE ASPIRACION | 227-1611-0 |
|---|---|---|---|

| N | P | C | CODICE | Q.TY | DENOMINAZIONE | DESCRIPTION | DESIGNATION | BEZEICHNUNG | DENOMINACION |
|---|---|---|---|---|---|---|---|---|---|
| | 01.01.1901 -> 01.01.3000 | | | | Note: 2822790500E | | | | |
| | 1 | | 2921967201D | 4.00 | PRESSATORE | PRESSER | PRESSEUR | DRUCKELEMENT | PRENSADOR |
| | 2 | | 0322790505C | 4.00 | LAMIERA | PLATE | TOLE | BLECH | CHAPA |
| | 3 | | 0322790504A | 1.00 | COPERCHIO | COVER | COUVERCLE | DECKEL | TAPA |
| | 3 | | 0511190105H | 1.00 | COPERCHIO | COVER | COUVERCLE | DECKEL | TAPA |
| | 4 | | 0319014002H | 2.00 | POMELLO | BALL GRIP | GRIFFE | KUGELGRIFF | POMO |
| | 5 | | 0319460237H | 4.00 | CHIAVETTA | KEY | CLAVETTE | KEIL | CHAVETA |
| | 6 | | 0321990051H | 6.00 | LAMIERA | PLATE | TOLE | BLECH | CHAPA |
| | 7 | | 0322790503H | 4.00 | STAFFA | BRACKET | BRIDE | BUEGEL | ABRAZADERA |
| | 8 | | 0322790502F | 1.00 | BOCCA | INLET | BOUCHE | MUENDUNG | BOCA |
| | 9 | | 0321990049E | 2.00 | VITE | SCREW | VIS | SCHRAUBE | TORNILLO |
| | 10 | | 0522790501H | 1.00 | CUFFIA | HOOD | HOTTE | HAUBE | CAMPANA |
| | 11 | | 0302110049H | 1.00 | TARGA | PLATE | PLAQUE | SCHILD | TARJETA |
| | 12 | | 0302110069A | 1.00 | TARGA | PLATE | PLAQUE | SCHILD | TARJETA |
| | 13 | | 0321910788E | 1.00 | TARGA | PLATE | PLAQUE | SCHILD | TARJETA |
| | 14 | | 0321910794G | 1.00 | TARGA | PLATE | PLAQUE | SCHILD | TARJETA |

227-1611

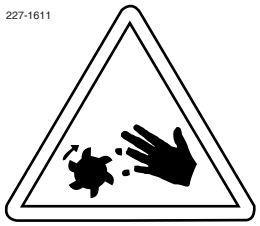

11




12

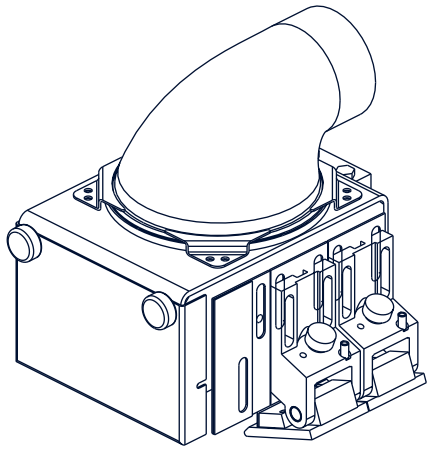

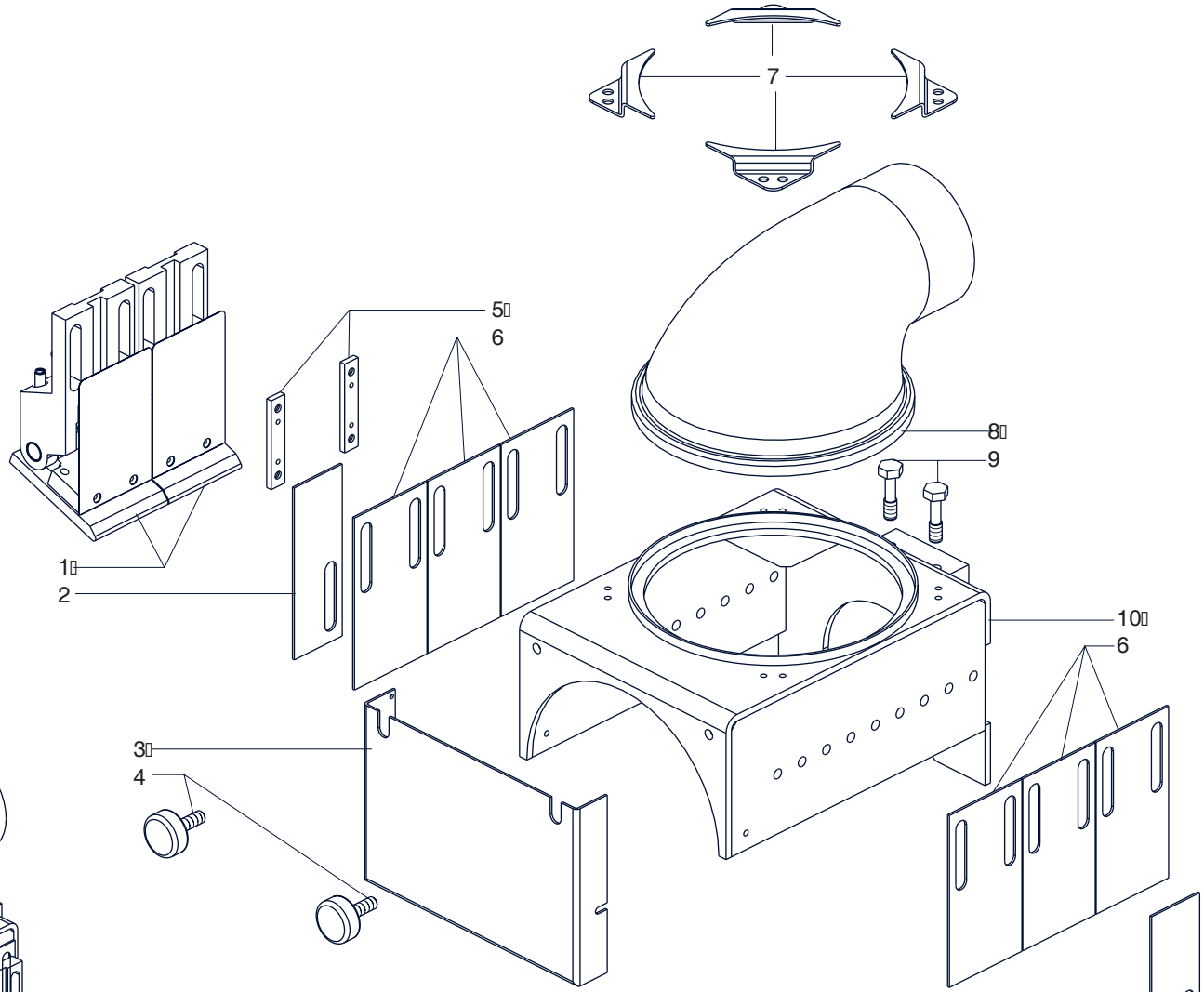


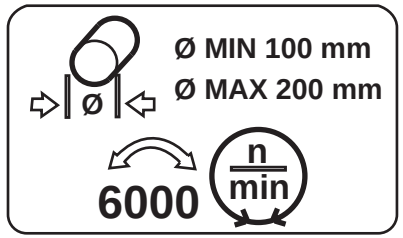


13

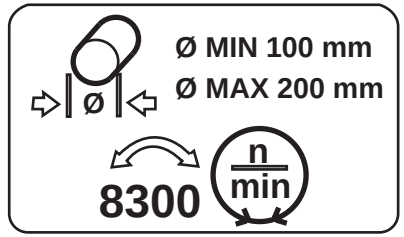


14

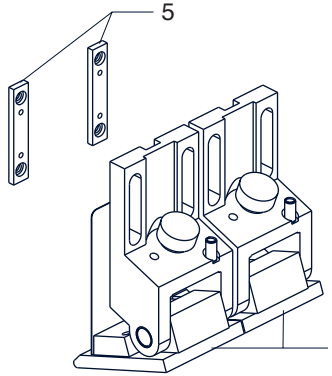


| | | | |
|---|---|---|---|
| scm | SUPERSET XL | CUFFIA D'ASPIRAZIONE - (01.01.1901 -> - p.20,06,2007)<br>SUCTION HOOD - HOTTE D'ASPIRATION<br>ABSAUGHAUBE - CAMPANA DE ASPIRACION | 227-1611-0 |

| scm | SUPERSET XL | CUFFIA D'ASPIRAZIONE - (p.20,06,2007)<br>SUCTION HOOD - HOTTE D'ASPIRATION<br>ABSAUGHAUBE - CAMPANA DE ASPIRACION | 227-1612-0 |
|---|---|---|---|

| N | P | C | CODICE | Q.TY | DENOMINAZIONE | DESCRIPTION | DESIGNATION | BEZEICHNUNG | DENOMINACION |
|---|---|---|---|---|---|---|---|---|---|
| | 01.01.1901 -> 01.01.3000 | | | | Note: 2822790520G | | | | |
| | 1 | | 0321990058D | 3.00 | PRESSATORE | PRESSER | PRESSEUR | DRUCKELEMENT | PRENSADOR |
| | 2 | | 0321990057B | 3.00 | PARATRUCIOLI | PLATE | PLAQUE | PLATTE | PARA - VIRUTA |
| | 3 | | 0522790522C | 1.00 | COPERCHIO | COVER | COUVERCLE | DECKEL | TAPA |
| | 4 | | 0319014002H | 2.00 | POMELLO | BALL GRIP | GRIFFE | KUGELGRIFF | POMO |
| | 5 | | 0321990056L | 1.00 | PROTEZIONE | GUARD | PROTECTION | ABDECKUNG | PROTECCION MECANICA |
| | 6 | | 0522790521A | 1.00 | CUFFIA | HOOD | HOTTE | HAUBE | CAMPANA |
| | 7 | | 0322790503H | 4.00 | STAFFA | BRACKET | BRIDE | BUEGEL | ABRAZADERA |
| | 8 | | 0322790502F | 1.00 | BOCCA | INLET | BOUCHE | MUENDUNG | BOCA |
| | 9 | | 0321990049E | 2.00 | VITE | SCREW | VIS | SCHRAUBE | TORNILLO |
| | 10 | | 0321990059F | 1.00 | GUIDA | GUIDE | GUIDE | FUEHRUNG | GUIA |
| | 11 | | 0321990060G | 1.00 | SUPPORTO | SUPPORT | SUPPORT | STUETZE | SOPORTE |
| | 12 | | 0319460711D | 1.00 | DISTANZIALE | SPACER | ENTRETOISE | DISTANZSTUECK | DISTANCIADOR |
| | 13 | | 0311190458C | 1.00 | COLTELLO DIVISORE S=2,15 | RIVING KNIFE | COUTEAU DIVISEUR | SPALTKEIL | CUCHILLA DIVISORIA |
| | 13 | | 0319460723L | 1.00 | COLTELLO DIVISORE S=2,6 | RIVING KNIFE | COUTEAU DIVISEUR | SPALTKEIL | CUCHILLO |
| | 14 | | 0311190458C | 1.00 | COLTELLO DIVISORE S=2,15 | RIVING KNIFE | COUTEAU DIVISEUR | SPALTKEIL | CUCHILLA DIVISORIA |
| | 14 | | 0319460722G | 1.00 | COLTELLO DIVISORE S=3,4 | RIVING KNIFE | COUTEAU DIVISEUR | SPALTKEIL | CUCHILLA DIVISORIA |
| | 15 | | 0321990068E | 2.00 | VITE | SCREW | VIS | SCHRAUBE | TORNILLO |

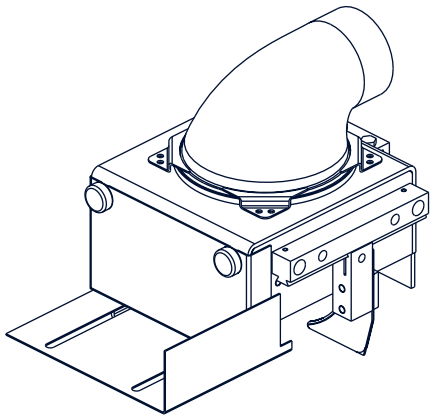

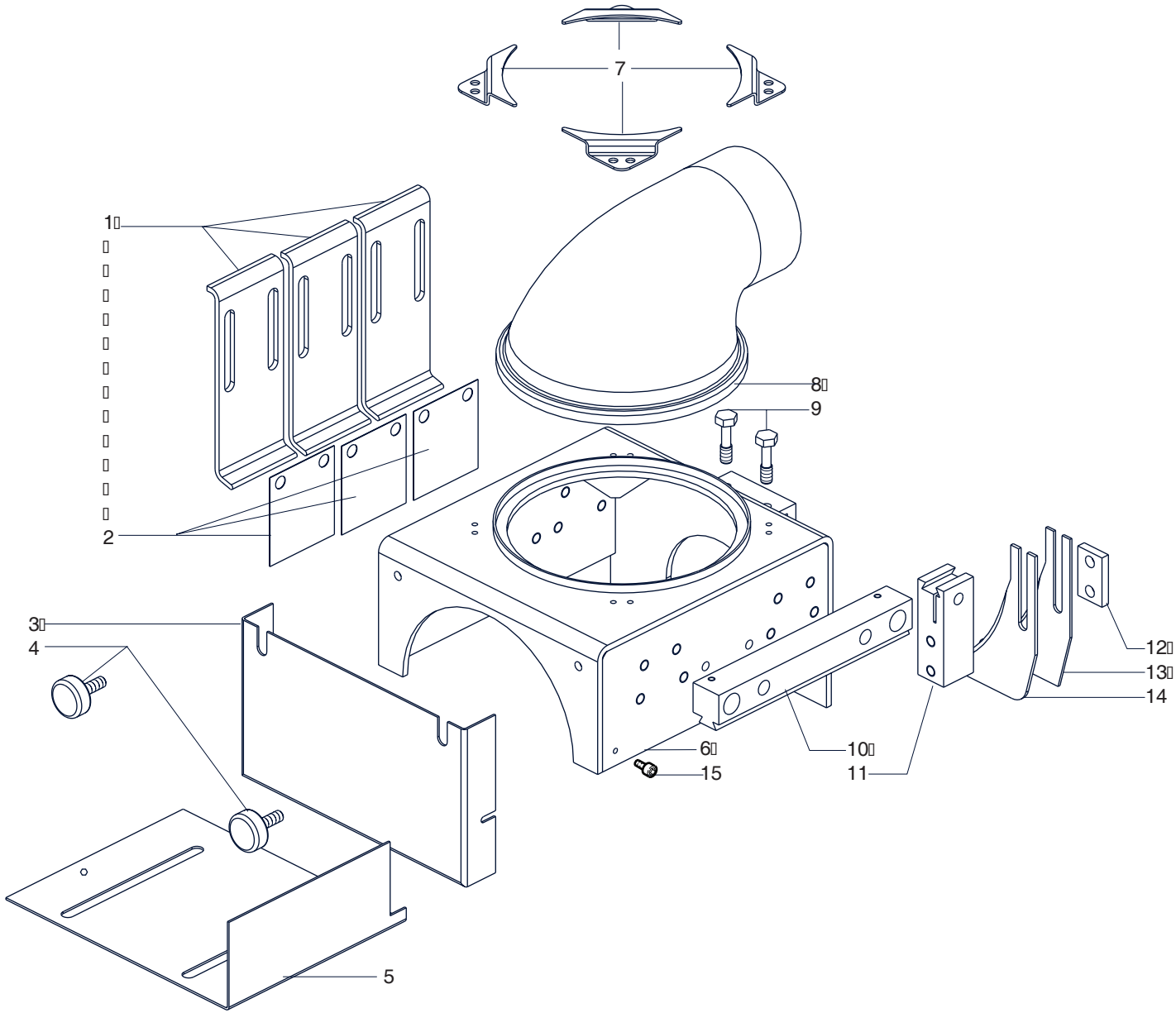


| | | | |
|---|---|---|---|
| scm | SUPERSET XL | CUFFIA D'ASPIRAZIONE - (01.01.1901 -> - p.20,06,2007)<br>SUCTION HOOD - HOTTE D'ASPIRATION<br>ABSAUGHAUBE - CAMPANA DE ASPIRACION | 227-1612-0 |

| scm | SUPERSET XL | CUFFIA D'ASPIRAZIONE - (p.20,06,2007)<br>SUCTION HOOD - HOTTE D'ASPIRATION<br>ABSAUGHAUBE - CAMPANA DE ASPIRACION | 227-1613-0 |
|---|---|---|---|

| N | P | C | CODICE | Q.TY | DENOMINAZIONE | DESCRIPTION | DESIGNATION | BEZEICHNUNG | DENOMINACION |
|---|---|---|---|---|---|---|---|---|---|
| | 01.01.1901 -> 01.01.3000 | | | | Note: 2822790540L | | | | |
| | 1 | | 2921967201D | 1.00 | PRESSATORE | PRESSER | PRESSEUR | DRUCKELEMENT | PRENSADOR |
| | 2 | | 0319434730B | 1.00 | MOLLA | SPRING | RESSORT | FEDER | RESORTE |
| | 3 | | 0322790504A | 1.00 | COPERCHIO | COVER | COUVERCLE | DECKEL | TAPA |
| | 4 | | 0319014002H | 2.00 | POMELLO | BALL GRIP | GRIFFE | KUGELGRIFF | POMO |
| | 6 | | 0321990051H | 2.00 | LAMIERA | PLATE | TOLE | BLECH | CHAPA |
| | 7 | | 0322790503H | 4.00 | STAFFA | BRACKET | BRIDE | BUEGEL | ABRAZADERA |
| | 8 | | 0322790502F | 1.00 | BOCCA | INLET | BOUCHE | MUENDUNG | BOCA |
| | 9 | | 0321990049E | 2.00 | VITE | SCREW | VIS | SCHRAUBE | TORNILLO |
| | 10 | | 0522790541C | 1.00 | CUFFIA | HOOD | HOTTE | HAUBE | CAMPANA |
| | 11 | | 0319434733H | 1.00 | COLTELLO DIVISORE | RIVING KNIFE | COUTEAU DIVISEUR | SPALTKEIL | CUCHILLA DIVISORIA |
| | 12 | | 0321990107H | 1.00 | MARTELLETTO | ANTIKICKBACK FINGER | CLIQUET | RUECKSCHLAGFINGER | MARTINETE |
| | 13 | | 0319434728H | 1.00 | SUPPORTO | SUPPORT | SUPPORT | STUETZE | SOPORTE |
| | 14 | | 0319461001H | 1.00 | SOSTEGNO | SUPPORT | SUPPORT | SUPPORT | SOSTEN |
| | 15 | | 0321990102G | 1.00 | PIASTRA | PLATE | PLAQUE | PLATTE | PLANCHA |
| | 16 | | 0321990106F | 1.00 | PERNO | PIN | PIVOT | BOLZEN | PERNO |
| | 17 | | 0319434791A | 1.00 | SUPPORTO | SUPPORT | SUPPORT | STUETZE | SOPORTE |
| | 18 | | 0324350031G | 2.00 | BOCCOLA | BUSHING | DOUILLE | BUCHSE | CASQUILLO |
| | 19 | | 0522340137A | 2.00 | RUOTA PRESSATRICE | WHEEL | ROUE | RAD | RUEDA PRENSORA |
| | 20 | | 0319434732F | 1.00 | MOLLA | SPRING | RESSORT | FEDER | RESORTE |
| | 21 | | 0319434729A | 1.00 | COLTELLO DIVISORE | RIVING KNIFE | COUTEAU DIVISEUR | SPALTKEIL | CUCHILLA DIVISORIA |
| | 22 | | 0321990105D | 1.00 | MARTELLETTO | ANTIKICKBACK FINGER | CLIQUET | RUECKSCHLAGFINGER | MARTINETE |
| | 23 | | 0319434731D | 1.00 | MOLLA | SPRING | RESSORT | FEDER | RESORTE |

227-1613

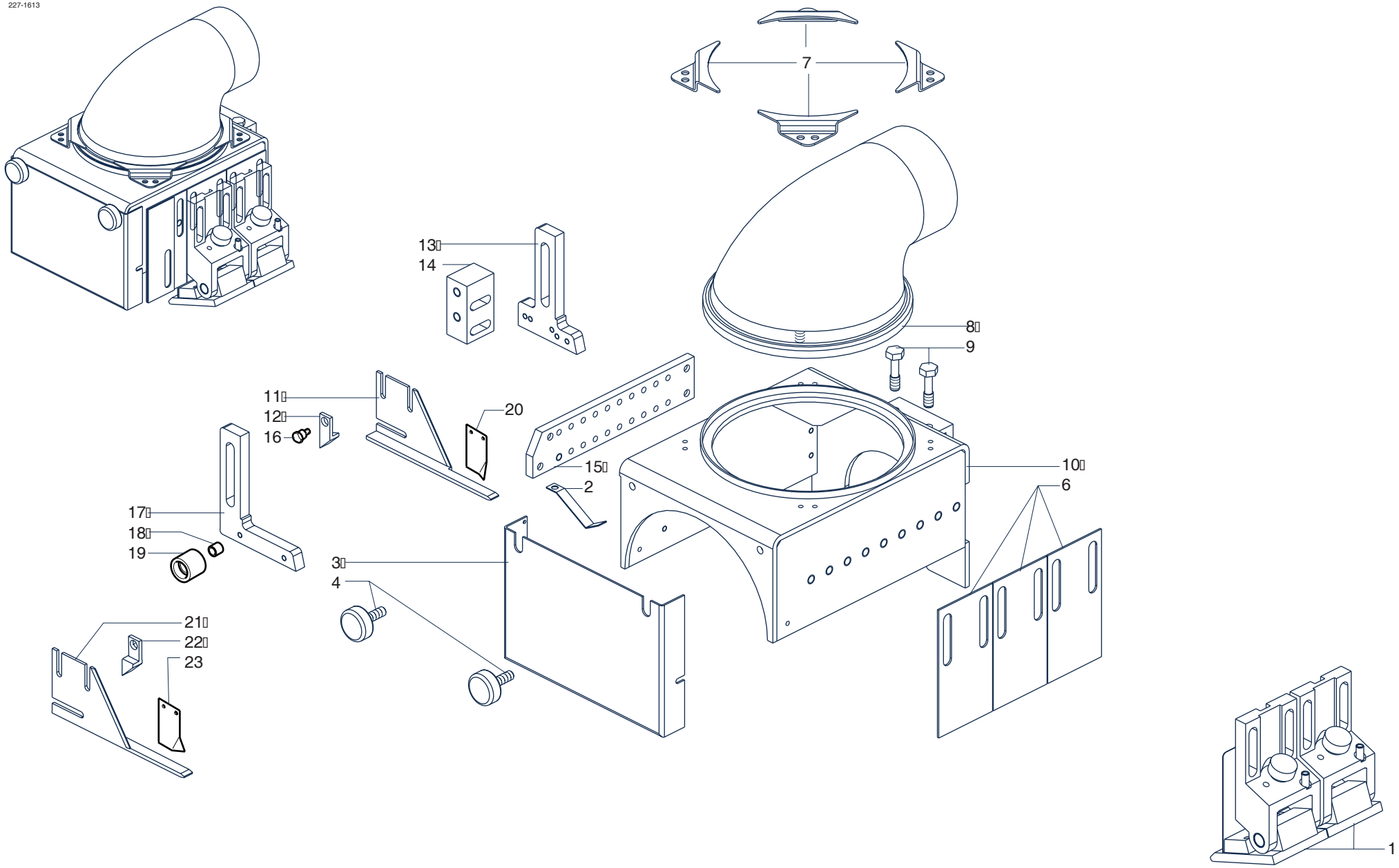


| | | | |
|---|---|---|---|
| scm | SUPERSET XL | CUFFIA D'ASPIRAZIONE - (01.01.1901 -> - p.20,06,2007)<br>SUCTION HOOD - HOTTE D'ASPIRATION<br>ABSAUGHAUBE - CAMPANA DE ASPIRACION | 227-1613-0 |

| scm | SUPERSET XL | RECUPERO LISTELLO A DX - (p.20,06,2007)<br>-<br>- | 227-1613-X |
|---|---|---|---|

| N | P | C | CODICE | Q.TY | DENOMINAZIONE | DESCRIPTION | DESIGNATION | BEZEICHNUNG | DENOMINACION |
|---|---|---|---|---|---|---|---|---|---|
| | 01.01.1901 -> 01.01.3000 | | | | Note: ----- | | | | |
| | 1 | | 0321970220C | 1.00 | RIGHETTA | RULE | REGLETTE | SCHIENE | REGLA |
| | 2 | | 0319434729A | 1.00 | COLTELLO DIVISORE | RIVING KNIFE | COUTEAU DIVISEUR | SPALTKEIL | CUCHILLA DIVISORIA |
| | 3 | | 0321990105D | 1.00 | MARTELLETTO | ANTIKICKBACK FINGER | CLIQUET | RUECKSCHLAGFINGER | MARTINETE |
| | 4 | | 0319434731D | 1.00 | MOLLA | SPRING | RESSORT | FEDER | RESORTE |

2271613X

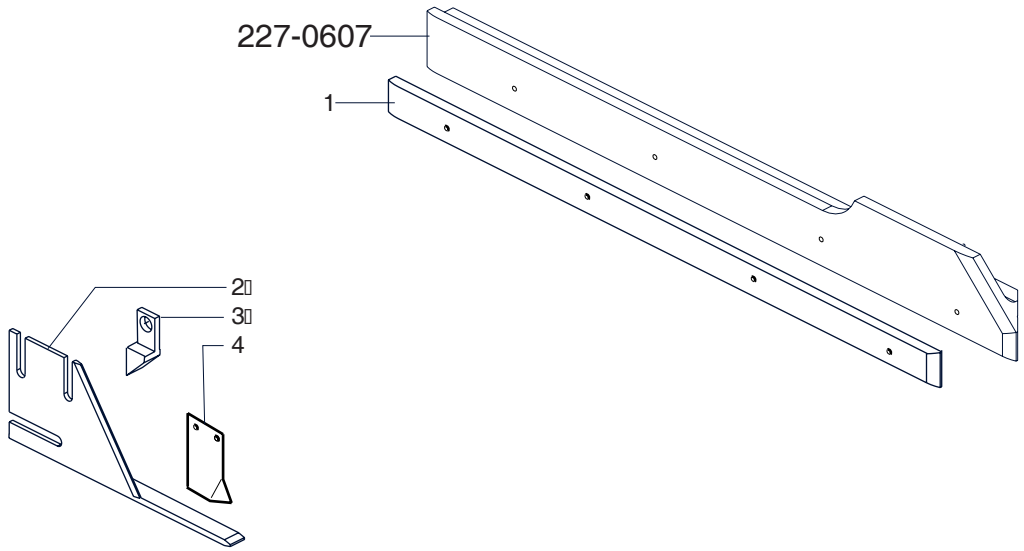


| | | | |
|---|---|---|---|
| scm | SUPERSET XL | RECUPERO LISTELLO A DX - (01.01.1901 -> - p.20,06,2007)<br>-<br>- | 227-1613-X |

| scm | SUPERSET XL | GR. SLITTA RECUPERO LISTELLO - (p.20,06,2007)<br>SLIDE (GLAZE BEAD) - GLISSIERE (PARE-CLOSE)<br>SCHLITTEN (GLASLEISTE) - TRINEO RECUPERACION JUNQUILLO | 227-1620-0 |
|---|---|---|---|

| N | P | C | CODICE | Q.TY | DENOMINAZIONE | DESCRIPTION | DESIGNATION | BEZEICHNUNG | DENOMINACION |
|---|---|---|---|---|---|---|---|---|---|
| | 01.01.1901 -> 01.01.3000 | | | | Note: ----- | | | | |
| | 1 | | 1111111111F | 0.00 | INDICE | POINTER | INDICATEUR | ZEIGER | INDICE |

227-1620

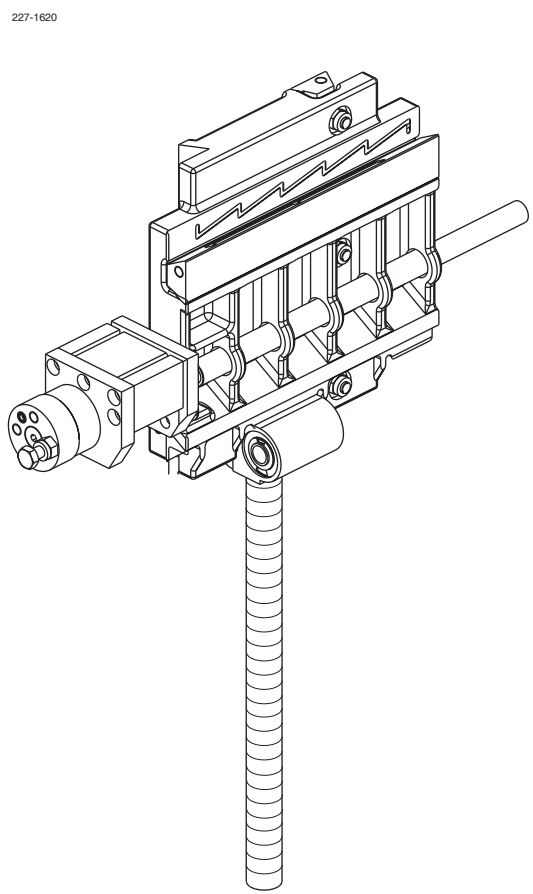

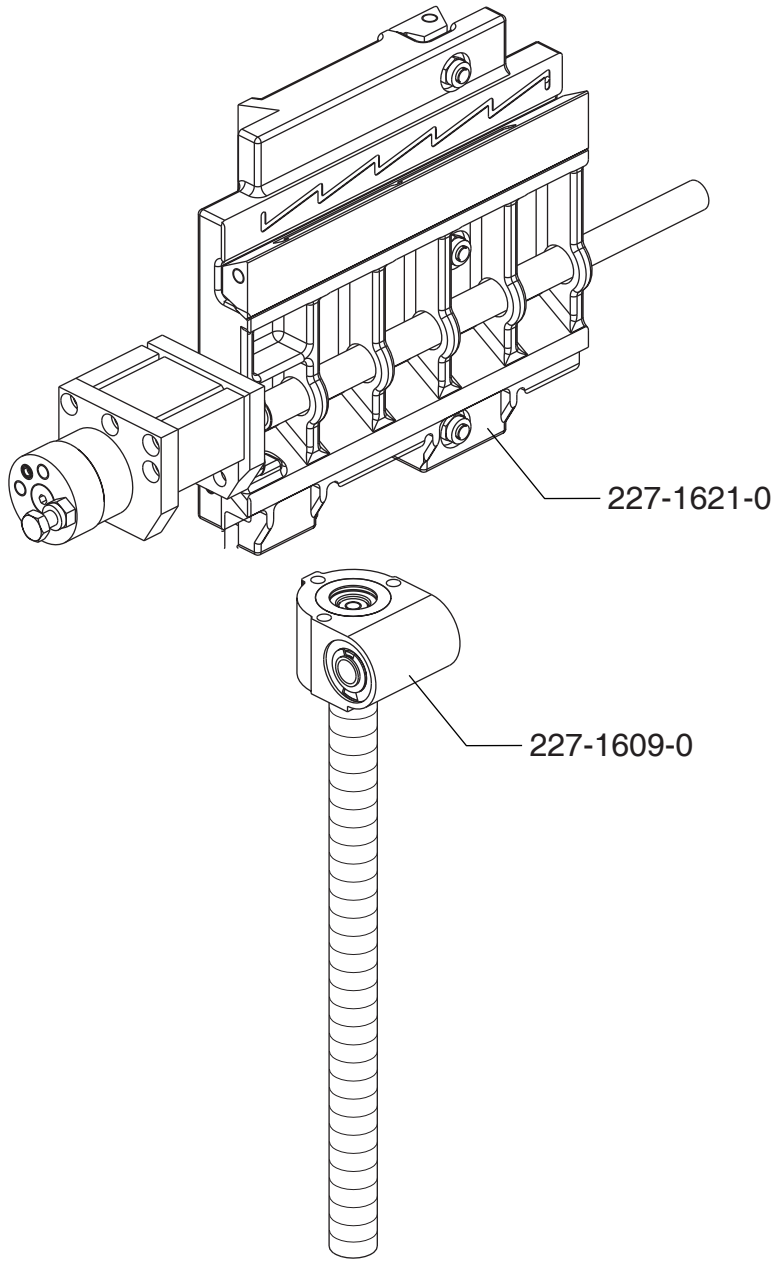

| scm | SUPERSET XL | SLITTA ORIZZONTALE RECUPERO LISTELLO - (p.20,06,2007)<br>HORIZONTAL SLIDE (GLAZE BEAD) - GLISSIERE HORIZ. (PARE-CLOSE)<br>HORIZONTALSCHLITTEN (GLASLEISTE) - TRINEO HORIZONTAL RECUPERACION JUNQUILLO | 227-1621-0 |
|---|---|---|---|

| N | P | C | CODICE | Q.TY | DENOMINAZIONE | DESCRIPTION | DESIGNATION | BEZEICHNUNG | DENOMINACION |
|---|---|---|---|---|---|---|---|---|---|
| | 01.01.1901 -> 01.01.3000 | | | | Note: ----- | | | | |
| | 1 | | 0000308367A | 1.00 | VITE | SCREW | VIS | SCHRAUBE | TORNILLO |
| | 2 | | 0000301363D | 1.00 | DADO | NUT | ECROU | MUTTER | TUERCA |
| | 3 | | 0319433502G | 1.00 | PERNO | PIN | PIVOT | BOLZEN | PERNO |
| | 4 | | 0300944604B | 1.00 | MOLLA | SPRING | RESSORT | FEDER | RESORTE |
| | 4 | | 0301230004F | 1.00 | MOLLA | SPRING | RESSORT | FEDER | RESORTE |
| | 5 | | 0000622014C | 1.00 | SFERA | BALL | BILLE | KUGEL | ESFERA |
| | 6 | | 0319433501E | 1.00 | REVOLVER | REVOLVER | REVOLVER | REVOLVER | REVOLVER |
| | 7 | | 0316341208F | 1.00 | TARGA | PLATE | PLAQUE | SCHILD | TARJETA |
| | 8 | | 0322790606G | 1.00 | FLANGIA | FLANGE | FLASQUE | FLANSCH | BRIDA |
| | 9 | | 0000308367A | 1.00 | VITE | SCREW | VIS | SCHRAUBE | TORNILLO |
| | 10 | | 0522790603E | 1.00 | MADREVITE | NUT SCREW | VIS-MERE | MUTTERGEWINDE | TUERCA |
| | 11 | | 0322790202L | 2.00 | LARDONE | GIB | CONTRE-FER | STELLEISTE | CHAVETA |
| | 12 | | 0000316533C | 6.00 | PRIGIONIERO | STUD BOLT | PRISONNIER | STIFTSCHRAUBE | TORNILLO S.CAB. |
| | 13 | | 0000301368E | 6.00 | DADO | NUT | ECROU | MUTTER | TUERCA |
| | 14 | | 0322790201G | 1.00 | SLITTA | SLIDE | COULISSE | SCHLITTEN | CORREDERA |
| | 15 | | 0322790604C | 1.00 | PROLUNGA | EXTENSION | RALLONGE | VERLAENGERUNG | EXTENSION |

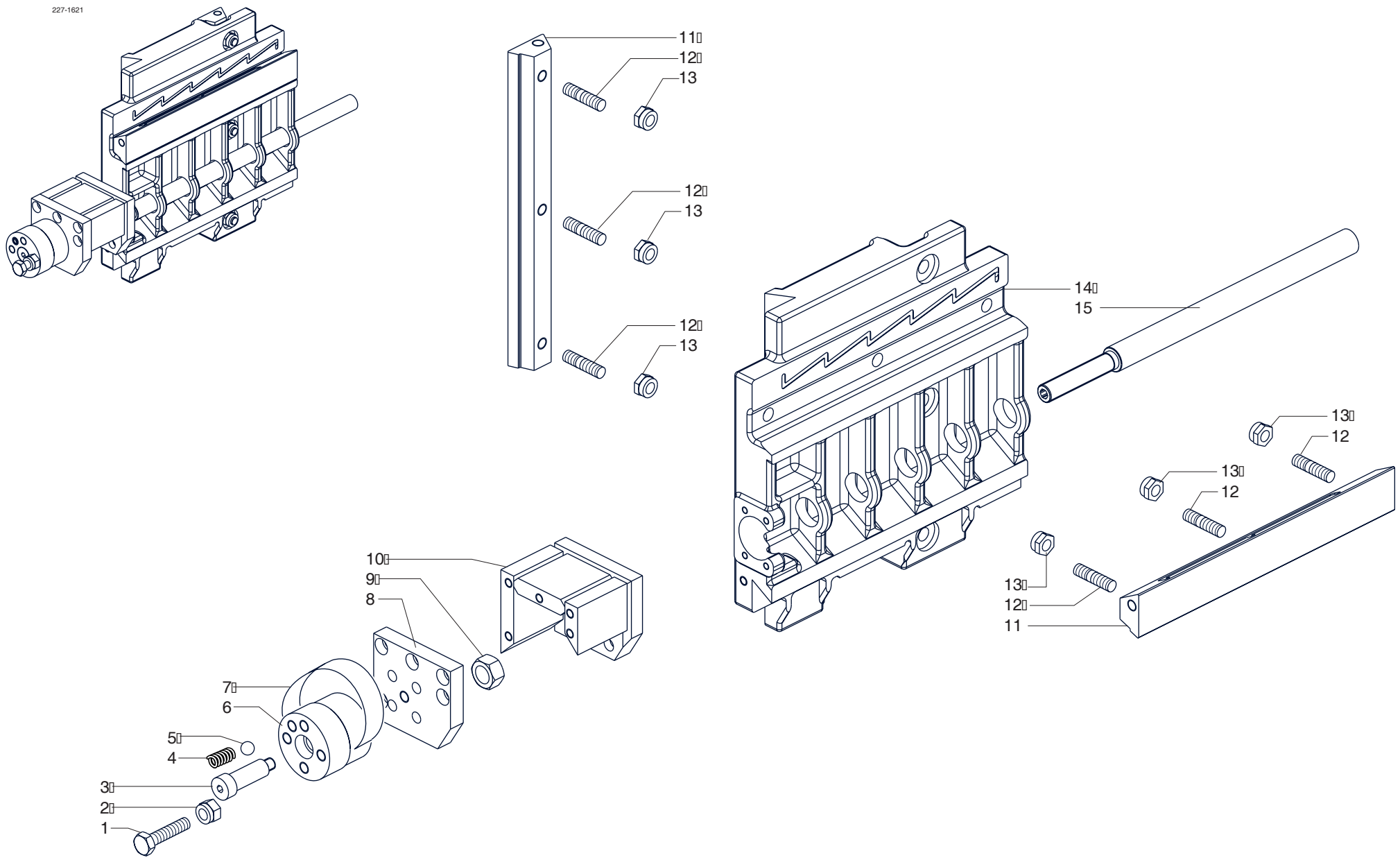


| | | | |
|---|---|---|---|
| scm | SUPERSET XL | SLITTA ORIZZONTALE RECUPERO LISTELLO - (01.01.1901 -> - p.20,06,2007)<br>HORIZONTAL SLIDE (GLAZE BEAD) - GLISSIERE HORIZ. (PARE-CLOSE)<br>HORIZONTALSCHLITTEN (GLASLEISTE) - TRINEO HORIZONTAL RECUPERACION JUNQUILLO | 227-1621-0 |

| scm | SUPERSET XL | SLITTA VERTICALE RECUPERO LISTELLO - (p.20,06,2007)<br>VERTICAL SLIDE (GLAZE BEAD) - GLISSIERE VERT. (PARE-CLOSE)<br>VERTIKALSCHLITTEN (GLASLEISTE) - TRINEO VERTICAL RECUPERACION JUNQUILLO | 227-1622-0 |
|---|---|---|---|

| N | P | C | CODICE | Q.TY | DENOMINAZIONE | DESCRIPTION | DESIGNATION | BEZEICHNUNG | DENOMINACION |
|---|---|---|---|---|---|---|---|---|---|
| | 01.01.1901 -> 01.01.3000 | | | | Note: ----- | | | | |
| 1 | | | 0322790602H | 1.00 | SLITTA | SLIDE | COULISSE | SCHLITTEN | CORREDERA |
| 2 | | | 0522790601A | 1.00 | DISTANZIALE | SPACER | ENTRETOISE | DISTANZSTUECK | DISTANCIADOR |
| 3 | | | 0322790306A | 1.00 | MADREVITE | NUT SCREW | VIS-MERE | MUTTERGEWINDE | TUERCA |

227-1622

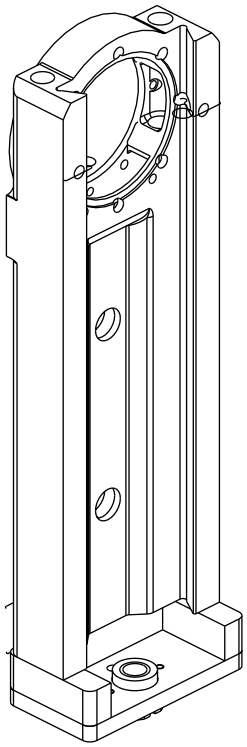

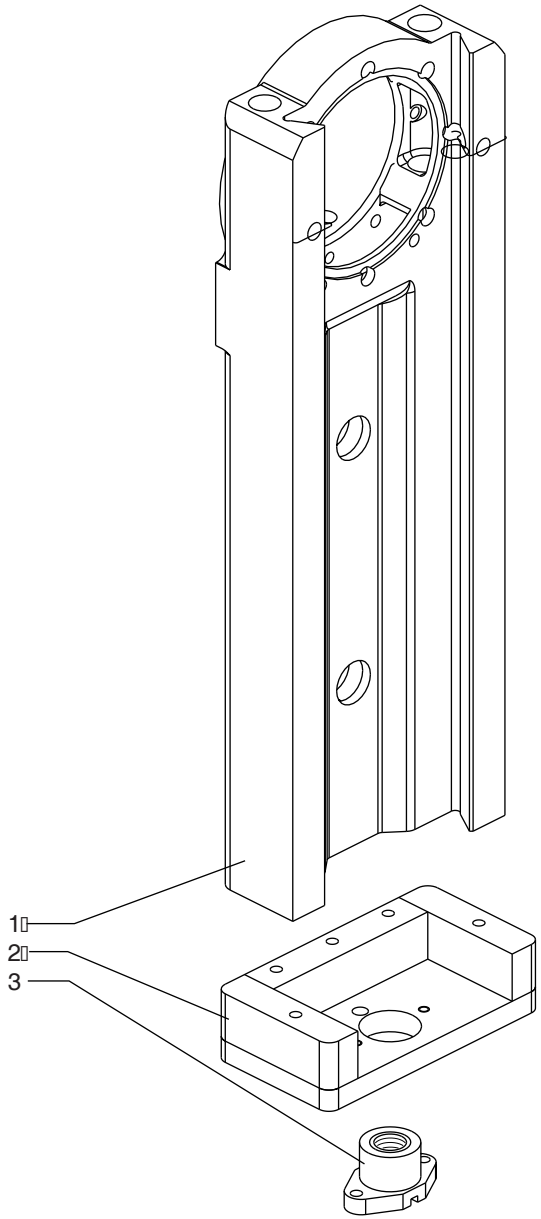


| | | | |
|---|---|---|---|
| scm | SUPERSET XL | SLITTA VERTICALE RECUPERO LISTELLO - (01.01.1901 ->  - p.20,06,2007)<br>VERTICAL SLIDE (GLAZE BEAD) - GLISSIERE VERT. (PARE-CLOSE)<br>VERTIKALSCHLITTEN (GLASLEISTE) - TRINEO VERTICAL RECUPERACION JUNQUILLO | 227-1622-0 |

| scm | SUPERSET XL | GRUPPO RECUPERO LISTELLO - (p.20,06,2007)<br>GLAZE BEAD RECOVERY UNIT - GROUPE RECUPERATION PARA-CLOSE<br>AGG. GLASLEISTENRUECKGEWINNEN - GRUPO RECUPERACION JUNQUILLO | 227-1623-0 |
|---|---|---|---|

| N | P | C | CODICE | Q.TY | DENOMINAZIONE | DESCRIPTION | DESIGNATION | BEZEICHNUNG | DENOMINACION |
|---|---|---|---|---|---|---|---|---|---|
| | 01.01.1901 -> 01.01.3000 | | | | Note: ----- | | | | |
| | 1 | | 1111111111F | 0.00 | INDICE | POINTER | INDICATEUR | ZEIGER | INDICE |

2271623

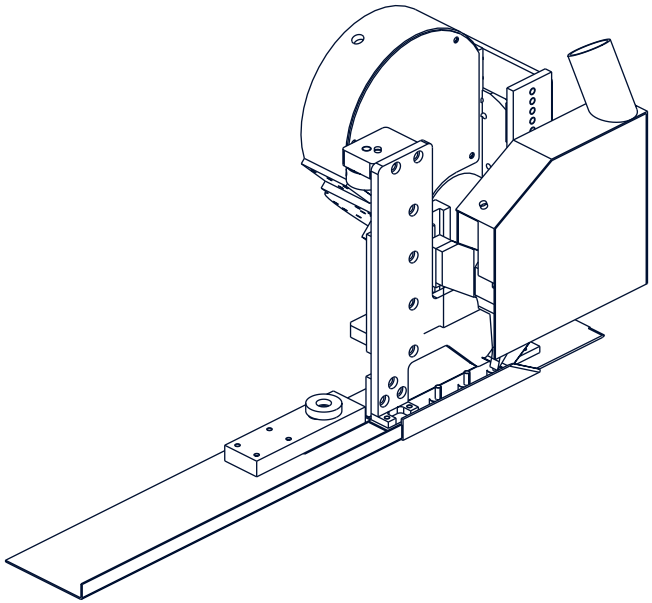

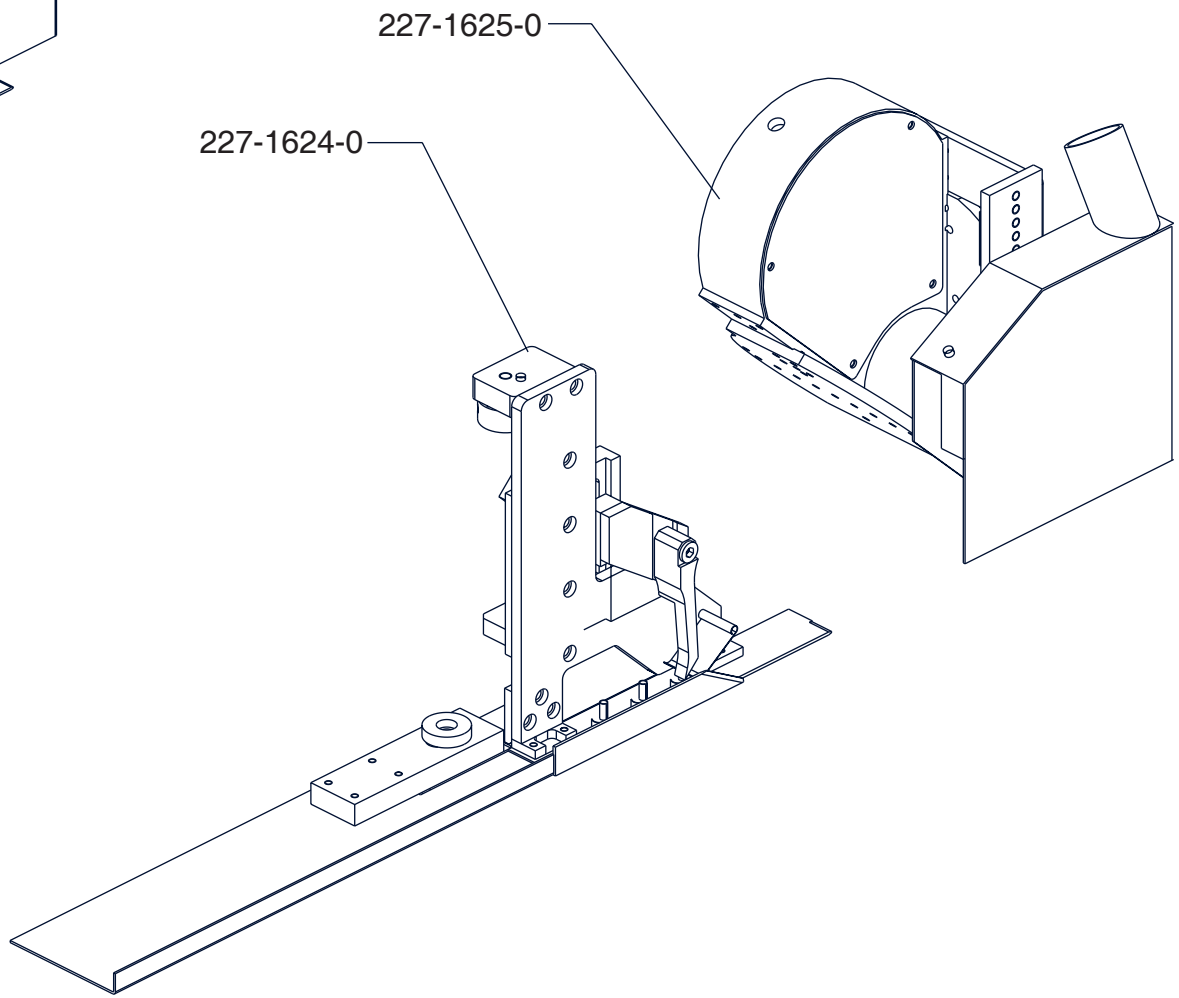


| | | | |
|---|---|---|---|
| scm | SUPERSET XL | GRUPPO RECUPERO LISTELLO - (01.01.1901 -> - p.20,06,2007)<br>GLAZE BEAD RECOVERY UNIT - GROUPE RECUPERATION PARA-CLOSE<br>AGG. GLASLEISTENRUECKGEWINNEN - GRUPO RECUPERACION JUNQUILLO | 227-1623-0 |

| scm | SUPERSET XL | COLTELLI DIVISORI - (p.20,06,2007)<br>RIVING KNIVES - COUTEAUX DIVISEURS<br>SPALTKEIL - CUCHILLAS DIVISORIAS | 227-1624-0 |
|---|---|---|---|

| N | P | C | CODICE | Q.TY | DENOMINAZIONE | DESCRIPTION | DESIGNATION | BEZEICHNUNG | DENOMINACION |
|---|---|---|---|---|---|---|---|---|---|
| | 01.01.1901 -> 01.01.3000 | | | | Note: ----- | | | | |
| 1 | | | 0319412312H | 1.00 | SCIVOLO | CHUTE | GLISSIERE | RUTSCHE | GUIA |
| 2 | | | 0333531302A | 3.00 | MOLLA | SPRING | RESSORT | FEDER | RESORTE |
| 3 | | | 0333531301H | 1.00 | COLTELLO | KNIFE | COUTEAU | MESSER | CUCHILLO |
| 4 | | | 0319412313A | 1.00 | ATTACCO | CONNECTING ROD | BARRE FIXATION | STAB | CONEXION |
| 5 | | | 0533531303G | 1.00 | SUPPORTO | SUPPORT | SUPPORT | STUETZE | SOPORTE |
| 6 | | | 0539730031D | 1.00 | SUPPORTO | SUPPORT | SUPPORT | STUETZE | SOPORTE |
| 7 | | | 0319412315E | 1.00 | BOCCOLA | BUSHING | DOUILLE | BUCHSE | CASQUILLO |
| 8 | | | 0333531304E | 1.00 | MOLLA | SPRING | RESSORT | FEDER | RESORTE |
| 9 | | | 0333531135F | 1.00 | PIATTO | PLATE | PLAT | PLATTE | PLATO |
| 10 | | | 0000622010D | 1.00 | SFERA ACCIAIO | STEEL BALL | BILLE EN ACIER | STAHLKUGEL | ESFERA ACERO |
| 11 | | | 0300944604B | 1.00 | MOLLA | SPRING | RESSORT | FEDER | RESORTE |
| 12 | | | 0319432839B | 1.00 | REVOLVER | REVOLVER | REVOLVER | REVOLVER | REVOLVER |
| 13 | | | 0319432840C | 1.00 | PERNO | PIN | PIVOT | BOLZEN | PERNO |
| 14 | | | 0339730022A | 1.00 | LARDONE | GIB | CONTRE-FER | STELLEISTE | CHAVETA |
| 15 | | | 0339730020F | 1.00 | LARDONE | GIB | CONTRE-FER | STELLEISTE | CHAVETA |
| 16 | | | 0539730018G | 1.00 | SLITTA | SLIDE | COULISSE | SCHLITTEN | CORREDERA |
| 17 | | | 0333531127L | 1.00 | PIATTO | PLATE | PLAT | PLATTE | PLATO |
| 18 | | | 0539730034A | 1.00 | SUPPORTO | SUPPORT | SUPPORT | STUETZE | SOPORTE |
| 19 | | | 0339730032B | 1.00 | MARTELLETTO | ANTIKICKBACK FINGER | CLIQUET | RUECKSCHLAGFINGER | MARTINETE |
| 20 | | | 0339730033D | 1.00 | GHIERA | RING NUT | EMBOUT | NUTMUTTER | COLLAR |
| 21 | | | 0319412316G | 1.00 | GHIERA | RING NUT | EMBOUT | NUTMUTTER | COLLAR |
| 22 | | | 0319412314C | 1.00 | SUPPORTO | SUPPORT | SUPPORT | STUETZE | SOPORTE |
| 23 | | | 0333531309F | 1.00 | GUIDA | GUIDE | GUIDE | FUEHRUNG | GUIA |
| 24 | | | 0333531318E | 1.00 | DISTANZIALE | SPACER | ENTRETOISE | DISTANZSTUECK | DISTANCIADOR |
| 25 | | | 0322790608B | 1.00 | PIATTO | PLATE | PLAT | PLATTE | PLATO |
| 26 | | | 0001307745D | 1.00 | FINECORSA | LIMIT SWITCH | FIN DE COURSE | ENDSCHALTER | FIN CARRERA |
| 27 | | | 0322790609D | 1.00 | PIATTO | PLATE | PLAT | PLATTE | PLATO |
| 28 | | | 0333531319G | 1.00 | COLTELLO DIVISORE | RIVING KNIFE | COUTEAU DIVISEUR | SPALTKEIL | CUCHILLA DIVISORIA |
| 100 | | | 2922720101E | 1.00 | GR.MOVIMENT. COLTELLO DIV | | | | |

227-1624

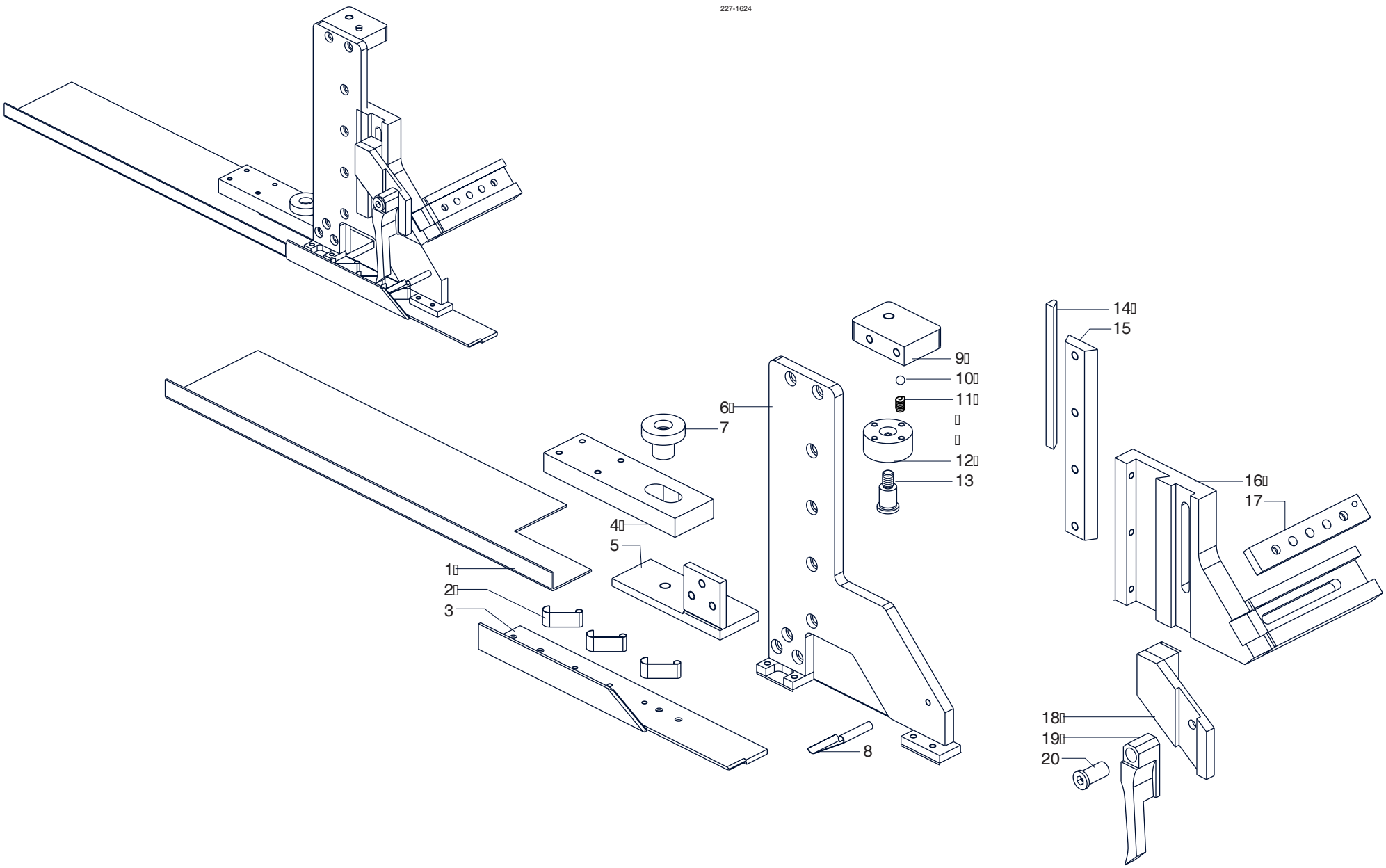


| | | | |
|---|---|---|---|
| scm | **SUPERSET XL** | **COLTELLI DIVISORI - (01.01.1901 -> 18.04.2002 - p.20,06,2007)**<br>**RIVING KNIVES - COUTEAUX DIVISEURS**<br>**SPALTKEIL - CUCHILLAS DIVISORIAS** | **227-1624-0** |

2722790630a

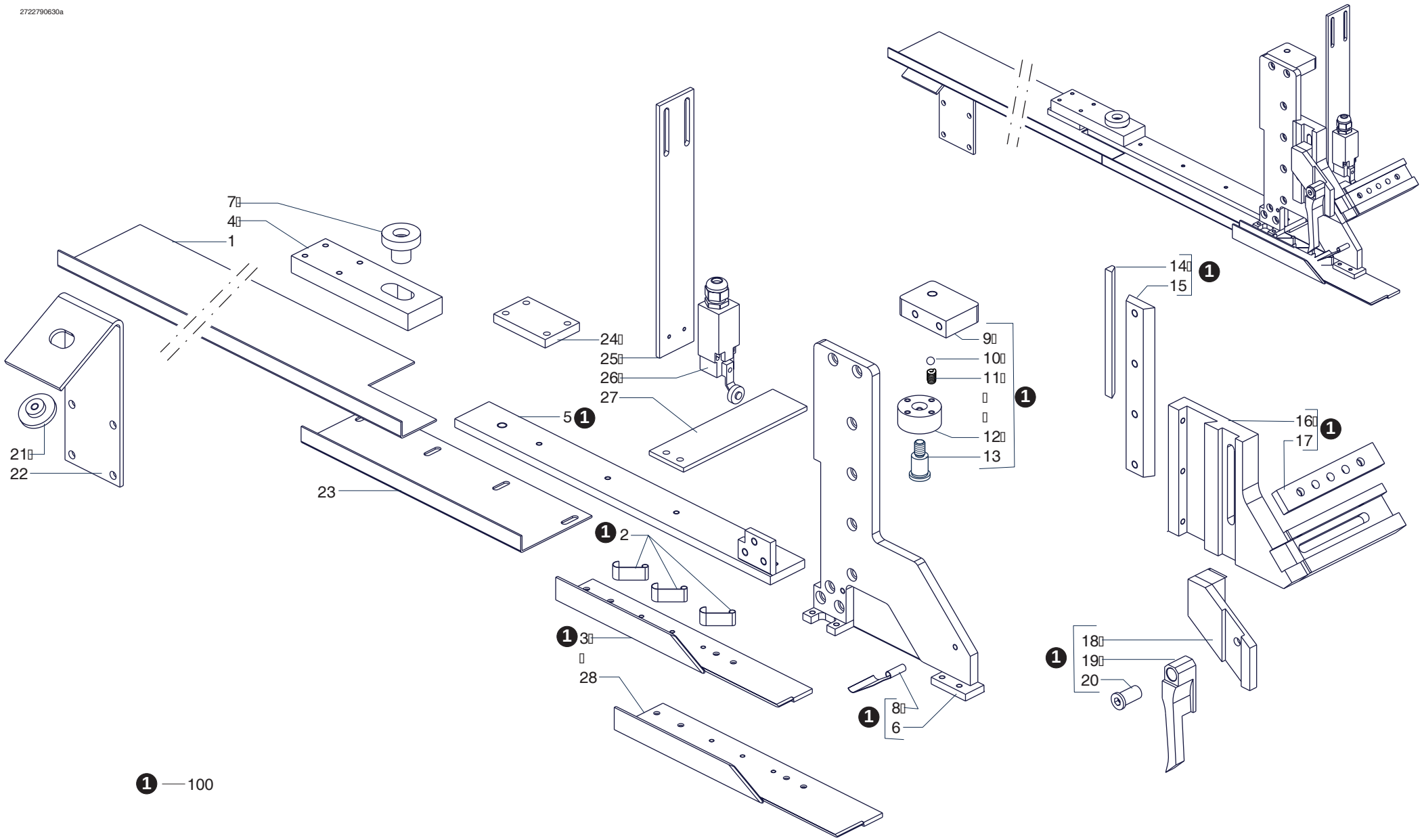


| scm | SUPERSET XL | COLTELLI DIVISORI - (19.04.2002 -> - p.20,06,2007)<br>RIVING KNIVES - COUTEAUX DIVISEURS<br>SPALTKEIL - CUCHILLAS DIVISORIAS | 227-1624-0 |
|---|---|---|---|

| N | P | C | CODICE | Q.TY | DENOMINAZIONE | DESCRIPTION | DESIGNATION | BEZEICHNUNG | DENOMINACION |
|---|---|---|---|---|---|---|---|---|---|
| | 01.01.1901 -> 01.01.3000 | | | | Note: ----- | | | | |
| | 1 | | 0333531210E | 1.00 | CHIUSURA | COVER | PIECE DE FERMETURE | DECKEL | CIERRE |
| | 2 | | 0319431135F | 1.00 | RONDELLA | WASHER | RONDELLE | SCHEIBE | ARANDELA |
| | 3 | | 0333531206G | 1.00 | PULEGGIA | PULLEY | POULIE | RIEMENSCHEIBE | POLEA |
| | 4 | | 0000606178A | 1.00 | CUSCINETTO | BEARING | ROULEMENT | LAGER | COJINETE |
| | 5 | | 0000617753D | 6.00 | MOLLA | SPRING | RESSORT | FEDER | RESORTE |
| | 6 | | 0000644071L | 1.00 | ANELLO SEEGER | CIRCLIP | CIRCLIP | SEEGERRING | SEEGER |
| | 7 | | 0000640190G | 4.00 | DADO | NUT | ECROU | MUTTER | TUERCA |
| | 8 | | 0333531201F | 1.00 | CORPO | BODY | CORPS | KOERPER | CUERPO |
| | 9 | | 0333531203A | 1.00 | ECCENTRICO | ECCENTRIC | EXCENTRIQUE | NOCKEN | EXCENTRICO |
| | 10 | | 0000603360C | 2.00 | CINGHIA TRAPEZOIDALE | V-BELT | COURROIE TRAPEZOIDALE | KEILRIEMEN | CORREA TRAPEZ. |
| | 10 | | 0000603361E | 2.00 | CINGHIA | BELT | COURROIE | RIEMEN | CORREA |
| | 11 | | 0333531205E | 1.00 | PULEGGIA | PULLEY | POULIE | RIEMENSCHEIBE | POLEA |
| | 11 | | 0333531283L | 1.00 | PULEGGIA | PULLEY | POULIE | RIEMENSCHEIBE | POLEA |
| | 12 | | 0333531211G | 1.00 | CHIUSURA | COVER | PIECE DE FERMETURE | DECKEL | CIERRE |
| | 13 | | 0310831300A | 1.00 | POMELLO | BALL GRIP | POIGNEE | KUGELGRIFF | POMO |
| | 14 | | 0310831201A | 1.00 | MOLLA | SPRING | RESSORT | FEDER | RESORTE |
| | 15 | | 0333531213B | 1.00 | BOCCOLA | BUSHING | DOUILLE | BUCHSE | CASQUILLO |
| | 16 | | 0310871500D | 1.00 | PERNO | PIN | PIVOT | BOLZEN | PERNO |
| | 17 | | 0333531238E | 1.00 | STAFFA | BRACKET | BRIDE | BUEGEL | ABRAZADERA |
| | 17 | | 0339730401E | 1.00 | STAFFA | BRACKET | BRIDE | BUEGEL | ABRAZADERA |
| | 18 | | 0533531248A | 1.00 | CUFFIA | HOOD | HOTTE | HAUBE | CAMPANA |
| | 19 | | 0000645073E | 1.00 | LINGUETTA | FEATHER KEY | LANGUETTE | FEDERKEIL | LINGUETA |
| | 20 | | 0333531247D | 1.00 | ALBERO D=30 | SHAFT | ARBRE | WELLE | EJE |
| | 21 | | 0333531214D | 1.00 | DISTANZIALE | SPACER | ENTRETOISE | DISTANZSTUECK | DISTANCIADOR |
| | 22 | | 0000606216B | 1.00 | CUSC.RAD.RIG.1C SFERE | RIGID RADIAL BEARING | ROULEMENT RADIAL RIGIDE | RADIALKUGELLAGER 1 REIHE | COJ.RAD.RIG.1C ESF. |
| | 23 | | 0333531209D | 1.00 | GHIERA | RING NUT | EMBOUT | NUTMUTTER | COLLAR |
| | 24 | | 0333531208B | 1.00 | GHIERA | RING NUT | EMBOUT | NUTMUTTER | COLLAR |
| | 25 | | 0510871302H | 1.00 | BOCCOLA | BUSHING | DOUILLE | BUCHSE | CASQUILLO |
| | 26 | | 0310874023E | 1.00 | RONDELLA | WASHER | RONDELLE | SCHEIBE | ARANDELA |
| | 27 | | 0001337909L | 1.00 | MOTORE TRIF. FRENO C.C. | 3-PH. MOTOR D.C. BRAKE | MOTEUR 3-PH . FREIN C.C | 3-PH. MOTOR G.S. BREMSE | MOT. TRIFAS. FR. C.C. |
| | 28 | | 0000310485D | 1.00 | VITE | SCREW | VIS | SCHRAUBE | TORNILLO |
| | 29 | | 0310871309L | 1.00 | ANELLO | RING | BAGUE | RING | ANILLO |
| | 30 | | 0310871310A | 1.00 | ANELLO | RING | BAGUE | RING | ANILLO |
| | 31 | | 0310871311C | 1.00 | ANELLO | RING | BAGUE | RING | ANILLO |
| | 32 | | 0316360045C | 1.00 | RONDELLA | WASHER | RONDELLE | SCHEIBE | ARANDELA |
| | 100 | | 2922760101D | 1.00 | GR. MANDRINO X REC. LIST | SPINDLE | MANDRIN | SPINDEL | MANDRIL |

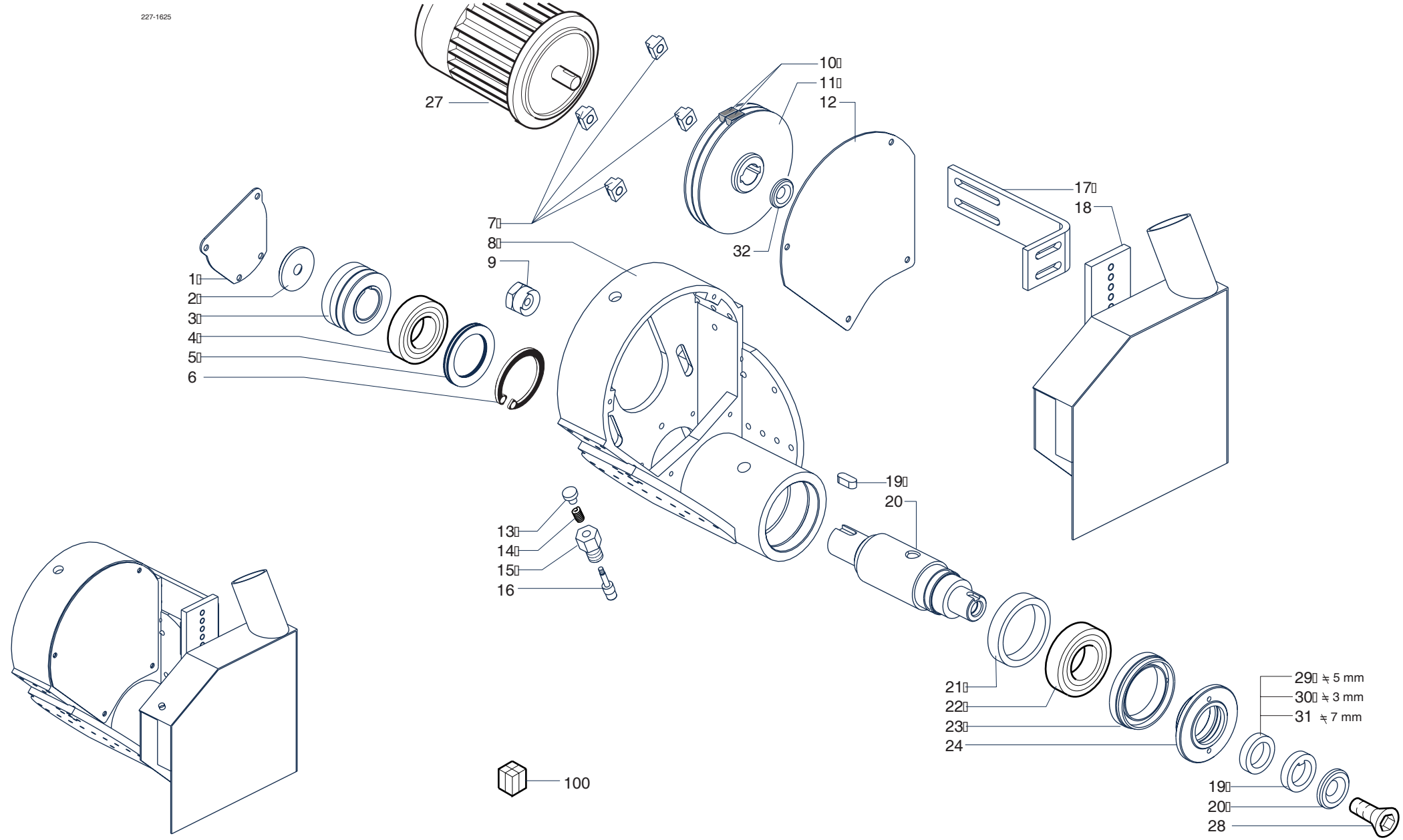


| scm | SUPERSET XL | PORTAUTENSILE E SUO BLOCCAGGIO - (01.01.1901 -> - p.20,06,2007)<br>TOOLHOLDER AND ITS LOCKING - PORTE-OUTIL ET SON BLOCAGE<br>WERKZEUGTRAEGER UND SEINE BLOCKIERUNG - PORTA-UTENSILIOS Y SU BLOQUEO | 227-1625-0 |
|---|---|---|---|

| scm | SUPERSET XL | DISPOSITIVO PER TAGLI PARALLELI - (p.20,06,2007)<br>DEVICE FOR RIP CUTTING - DISPOSITIF POUR COUPES PARALLELES<br>ZUSAETZLICHER DOPPELRAHMEN - | 227-1626-0 |
|---|---|---|---|

| N | P | C | CODICE | Q.TY | DENOMINAZIONE | DESCRIPTION | DESIGNATION | BEZEICHNUNG | DENOMINACION |
|---|---|---|---|---|---|---|---|---|---|
| | 01.01.1901 -> 01.01.3000 | | | | Note: ----- | | | | |
| 1 | | | 0319012600E | 1.00 | POMOLO | BALL GRIP | POIGNEE | KUGELGRIFF | POMO |
| 2 | | | 0321960417L | 1.00 | BARRA FILETTATA | THREADED BAR | BARRE | STANGE | BARRA |
| 3 | | | 0319460262A | 1.00 | PIASTRA | PLATE | PLAQUE | PLATTE | PLANCHA |
| 4 | | | 0322781026E | 1.00 | SUPPORTO | SUPPORT | SUPPORT | STUETZE | SOPORTE |
| 5 | | | 0000309250C | 3.00 | VITE | SCREW | VIS | SCHRAUBE | TORNILLO |
| 6 | | | 0319461706E | 1.00 | STAFFA | BRACKET | BRIDE | BUEGEL | ABRAZADERA |
| 7 | | | 0322781013G | 3.00 | BATTUTA | STOP | BUTEE | ANSCHLAG | TOPE |
| 8 | | | 0000309275F | 7.00 | VITE | SCREW | VIS | SCHRAUBE | TORNILLO |
| 9 | | | 0319461804C | 10.00 | TASSELLO | BLOCK | TASSEAU | DUEBEL | TACO |
| 10 | | | 0322781029B | 3.00 | COLTELLO DIVISORE | RIVING KNIFE | COUTEAU DIVISEUR | SPALTKEIL | CUCHILLA DIVISORIA |
| 11 | | | 0000304183E | 2.00 | GRANO | DOWEL | VIS SIX PANS CREUX | DUEBEL | PASADOR |
| 12 | | | 0522781011G | 1.00 | SUPPORTO | SUPPORT | SUPPORT | STUETZE | SOPORTE |
| 13 | | | 0000301181G | 2.00 | DADO | NUT | ECROU | MUTTER | TUERCA |
| 14 | | | 0319014002H | 2.00 | POMELLO | BALL GRIP | GRIFFE | KUGELGRIFF | POMO |
| 15 | | | 0322781015B | 7.00 | PORTACOLTELLO | KNIFE HOLDER | PORTE-COUTEAU | MESSERHALTER | PORTA CUCHILLO |
| 16 | | | 0322781026E | 4.00 | SUPPORTO | SUPPORT | SUPPORT | STUETZE | SOPORTE |
| 17 | | | 0310120331E | 7.00 | BOCCOLA H 12 | BUSHING | DOUILLE | BUCHSE | CASQUILLO |
| 18 | | | 0522790522C | 1.00 | COPERCHIO | COVER | COUVERCLE | DECKEL | TAPA |
| 19 | | | 0321990056L | 1.00 | PROTEZIONE | GUARD | PROTECTION | ABDECKUNG | PROTECCION MECANICA |
| 20 | | | 0322720142F | 1.00 | PIANO IN REXILON | REXILON TABLE | TABLE EN REXILON | TISCH AUS REXILON | MESA EN REXILON |
| 21 | | | 0321990058D | 3.00 | PRESSATORE | PRESSER | PRESSEUR | DRUCKELEMENT | PRENSADOR |
| 22 | | | 0321990057B | 3.00 | PARATRUCIOLI | PLATE | PLAQUE | PLATTE | PARA - VIRUTA |
| 23 | | | 0322790503H | 4.00 | STAFFA | BRACKET | BRIDE | BUEGEL | ABRAZADERA |
| 24 | | | 0522790521A | 1.00 | CUFFIA | HOOD | HOTTE | HAUBE | CAMPANA |
| 25 | | | 0322790502F | 1.00 | BOCCA | INLET | BOUCHE | MUENDUNG | BOCA |
| 26 | | | 0322781014L | 1.00 | PIASTRA | PLATE | PLAQUE | PLATTE | PLANCHA |
| 27 | | | 0522781030G | 1.00 | SUPPORTO | SUPPORT | SUPPORT | STUETZE | SOPORTE |
| 28 | | | 0000301430F | 2.00 | DADO | NUT | ECROU | MUTTER | TUERCA |
| 29 | | | 0000305361D | 1.00 | ROSETTA | WASHER | RONDELLE | SCHEIBE | ARANDELA |
| 30 | | | 0322781018H | 1.00 | PERNO | PIN | PIVOT | BOLZEN | PERNO |

5222706050F

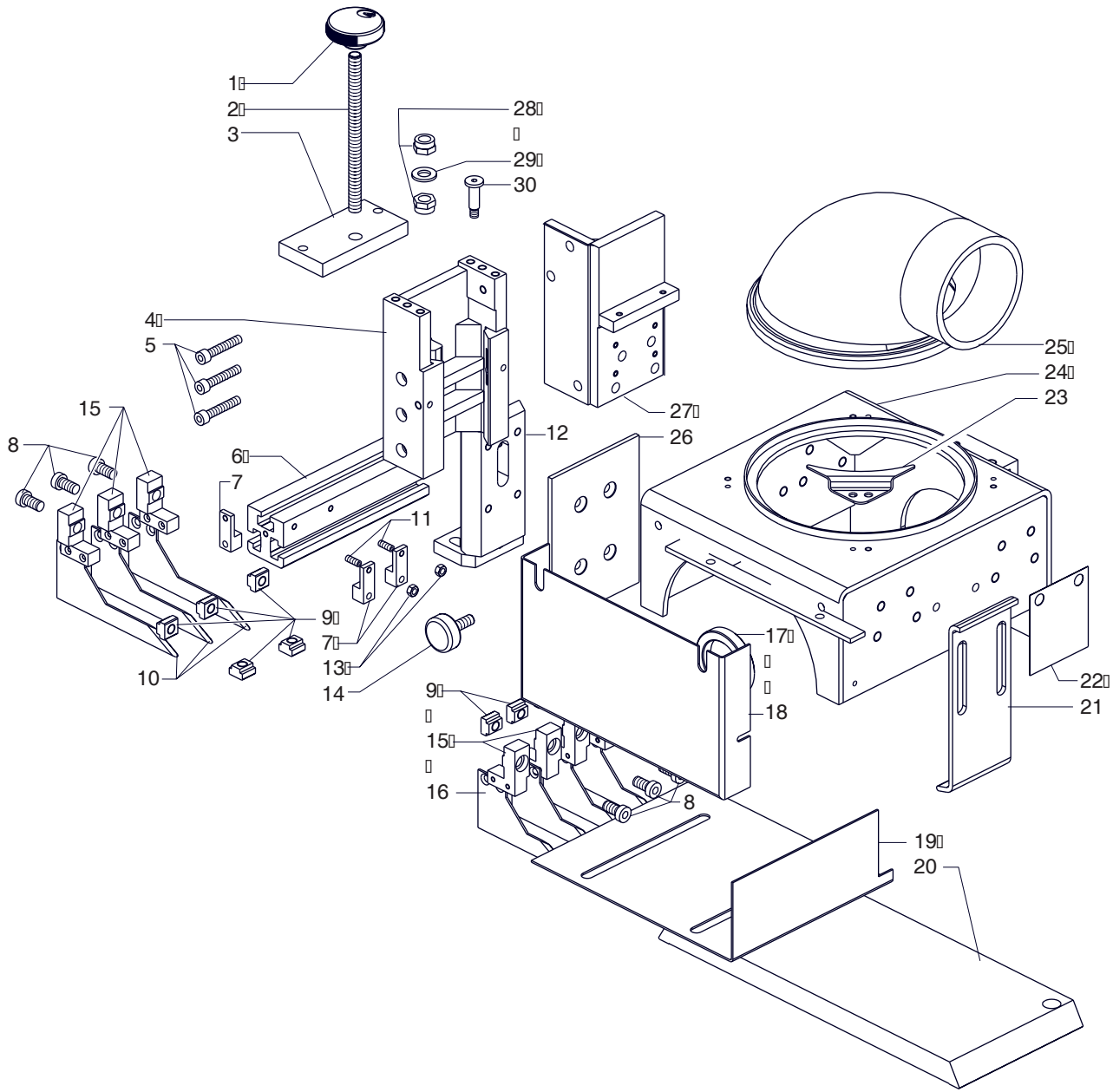


| | | | |
|---|---|---|---|
| scm | SUPERSET XL | DISPOSITIVO PER TAGLI PARALLELI - (01.01.1901 -> - p.20,06,2007)<br>DEVICE FOR RIP CUTTING - DISPOSITIF POUR COUPES PARALLELES<br>ZUSAETZLICHER DOPPELRAHMEN - | 227-1626-0 |

| N | P | C | CODICE | Q.TY | DENOMINAZIONE | DESCRIPTION | DESIGNATION | BEZEICHNUNG | DENOMINACION |
|---|---|---|---|---|---|---|---|---|---|
| | | | 01.01.1901 -> 01.01.3000 | | Note: 3021900034L | | | | |
| il rif.50 non è codificato ed è composto da: | | | | | | | | | |
| temporizzatore 81.503.710 | | | | | | | | | |
| Base memoria 81.532.001 | | | | | | | | | |
| Adattatore a pomolo 79.451.698 | | | | | | | | | |
| 3122700100B | | | | | | | | | |
| | | | 1 | 2752100003E | 1.00 | CENTRALINA OLEODINAMICA | | | | |
| | | | 2 | 0552100114D | 1.00 | CARTER | COVER | CARTER | DECKEL | CARTER |
| | | | 3 | 0352100108G | 1.00 | MOZZO | HUB | MOYEU | NABE | CUBO |
| | | | 4 | 0000300028C | 1.00 | ROSETTA | WASHER | RONDELLE | SCHEIBE | ARANDELA |
| | | | 5 | 0352100109L | 1.00 | RUOTA DENTATA | GEAR WHEEL | ROUE DENTEE | ZAHNRAD | RUEDA DENTADA |
| | | | 5 | 0352100144C | 1.00 | RUOTA DENTATA | GEAR WHEEL | ROUE DENTEE | ZAHNRAD | RUEDA DENTADA |
| | | | 6 | 0001501890F | 1.00 | CILINDRO PNEUMATICO | PNEUMATIC CYLINDER | CYLINDRE PNEUMATIQUE | PNEUMATIKZYLINDER | CILINDRO NEUMATICO |
| | | | 7 | 0001500053L | 1.00 | CERNIERA X CIL. | HINGE FOR CYLINDER | CHARNIERE | SCHARNIER F.ZYL. | BISAGRA |
| | | | 8 | 0352100106C | 1.00 | FULCRO | BUSH | DOUILLE | BUCHSE | FULCRO |
| | | | 9 | 0352100104H | 1.00 | PIASTRA | PLATE | PLAQUE | PLATTE | PLANCHA |
| | | | 10 | 0352100101B | 2.00 | LINGUETTA | FEATHER KEY | LANGUETTE | FEDERKEIL | LINGUETA |
| | | | 11 | 0000619081L | 2.00 | MANIGLIA | HANDLE | POIGNEE | HANDGRIFF | MANIJA |
| | | | 12 | 0352100111C | 1.00 | BARRA | BAR | BARRE | STANGE | BARRA |
| | | | 13 | 0319014027B | 1.00 | POMELLO | BALL GRIP | POIGNEE | KUGELGRIFF | POMO |
| | | | 13 | 0319015001G | 0.00 | POMELLO | BALL GRIP | POIGNEE | KUGELGRIFF | POMO |
| | | | 14 | 0352100102D | 1.00 | INTERFACCIA | RING NUT | EMBOUT | STELLRING | CONEXION |
| | | | 14 | 0552100132B | 1.00 | INTERFACCIA | RING NUT | EMBOUT | STELLRING | CONEXION |
| | | | 15 | 0311136427A | 1.00 | TARGHETTA | RATING PLATE | PLAQUETTE | SCHILD | TARJETA |
| | | | 15 | 0352100125C | 1.00 | TARGHETTA | RATING PLATE | PLAQUETTE | SCHILD | TARJETA |
| | | | 16 | 0352100112E | 1.00 | SQUADRETTO | SQUARE | EQUERRE | WINKEL | ESCUADRA |
| | | | 17 | 0352100113G | 1.00 | SUPPORTO | SUPPORT | SUPPORT | STUETZE | SOPORTE |
| | | | 18 | 0352100105A | 1.00 | PERNO | PIN | PIVOT | BOLZEN | PERNO |
| | | | 19 | 0000606100E | 2.00 | CUSCINETTO | BEARING | ROULEMENT | LAGER | COJINETE |
| | | | 20 | 0000644290D | 2.00 | ANELLO | RING | BAGUE | RING | ANILLO |
| | | | 21 | 0552100107L | 1.00 | CORPO OSCILLANTE | OSCILLATING BODY | CORPS OSCILLANT | OSZILLIERENDER KÖRPER | CUERPO OSCILANTE |
| | | | 22 | 0000301849F | 1.00 | GHIERA | RING NUT | EMBOUT | NUTMUTTER | COLLAR |
| | | | 23 | 0552100115F | 1.00 | GUIDA | GUIDE | GUIDE | FUEHRUNG | GUIA |
| | | | 24 | 0352100117F | 7.00 | DADO | NUT | ECROU | MUTTER | TUERCA |
| | | | 25 | 0552100116H | 3.00 | GUIDA | GUIDE | GUIDE | FUEHRUNG | GUIA |
| | | | 26 | 0311020904C | 1.00 | PROFILATO | PROFILE BAR | PROFILE | PROFIL | PERFILADO |
| | | | 26 | 0326422704G | 1.00 | PROFILATO | PROFILE BAR | PROFILE | PROFIL | PERFILADO |
| | | | 26 | 1411020904F | 1.00 | PROFILATO | PROFILE BAR | PROFILE | PROFIL | PERFILADO |
| | | | 27 | 0352100119A | 3.00 | SQUADRO | SQUARE SUPPORT | EQUERRE | WINKEL SUPPORT | ESCUADRA |
| | | | 28 | 0000619532G | 4.00 | MANIGLIA | HANDLE | POIGNEE | HANDGRIFF | MANIJA |
| | | | 29 | 0552100118C | 1.00 | GUIDA | GUIDE | GUIDE | FUEHRUNG | GUIA |
| | | | 30 | 0552100120F | 1.00 | SPONDA | SIDE | BORDE | WAND | COMPUERTA |

| N | P | C | CODICE | Q.TY | DENOMINAZIONE | DESCRIPTION | DESIGNATION | BEZEICHNUNG | DENOMINACION |
|---|---|---|---|---|---|---|---|---|---|
| | 31 | | 0001502713C | 1.00 | VALVOLA | VALVE | SOUPAPE | VENTIL | VALVULA |
| | 32 | | 0001322346F | 1.00 | MOTORE TRIF. | 3-PH. MOTOR | 3-PH. MOTEUR | 3-PH. MOTOR | MOT.TRIFAS. |
| | 32 | | 0001323340D | 1.00 | MOTORE TRIF. | 3.PH. MOTOR | 3 PH. MOTEUR | 3-DREIPHASENMOTOR | MOT. TRIFAS |

| N | P | C | CODICE | Q.TY | DENOMINAZIONE | DESCRIPTION | DESIGNATION | BEZEICHNUNG | DENOMINACION |
|---|---|---|---|---|---|---|---|---|---|
| | 32 | | 0001323342H | 1.00 | MOTORE TRIF. | 3.PH. MOTOR | 3 PH. MOTEUR | 3-DREIPHASENMOTOR | MOT. TRIFAS |
| | 32 | | 0001337990L | 1.00 | MOTORE TRIF. | 3.PH. MOTOR | 3 PH. MOTEUR | 3-DREIPHASENMOTOR | MOT. TRIFAS |
| | 32 | | 0001338436F | 1.00 | MOTORE TRIF. | 3.PH. MOTOR | 3 PH. MOTEUR | 3-DREIPHASENMOTOR | MOT. TRIFAS |
| | 32 | | 0001339739A | 1.00 | MOTORE TRIF. | 3-PH. MOTOR | 3-PH. MOTEUR | 3-PH. MOTOR | MOT.TRIFAS. |
| | 33 | | 0352100122F | 1.00 | SOSTEGNO | SUPPORT | SUPPORT | SUPPORT | SOSTEN |
| | 33 | | 0552100134F | 1.00 | STAFFA | BRACKET | BRIDE | BUEGEL | ABRAZADERA |
| | 34 | | 0002402029C | 1.00 | OLIO | OIL | HUILE | OEL | ACEITE |
| | 34 | | 0002402042L | 1.00 | OLIO | OIL | HUILE | OEL | ACEITE |
| | 35 | | 0352100121D | 1.00 | ANGOLARE | SQUARE SUPPORT | CORNIERE | WINKELSUPPORT | ESQUINERO |
| | 35 | | 0552100133D | 1.00 | SUPPORTO | SUPPORT | SUPPORT | STUETZE | SOPORTE |
| | 36 | | 0000619710E | 2.00 | MANIGLIA | HANDLE | POIGNEE | HANDGRIFF | MANIJA |
| | 37 | | 0352100110A | 1.00 | RUOTA DENTATA | GEAR WHEEL | ROUE DENTEE | ZAHNRAD | RUEDA DENTADA |
| | 38 | | 0000629131H | 1.00 | FORCELLA | FORK | FOURCHE | GABEL | HORQUILLA |
| | 39 | | 0352100127G | 1.00 | SOSTEGNO | SUPPORT | SUPPORT | SUPPORT | SOSTEN |
| | 40 | | 0319461230D | 1.00 | MOLLA | SPRING | RESSORT | FEDER | RESORTE |
| | 40 | | 0790568055L | 1.00 | MOLLA | SPRING | RESSORT | FEDER | RESORTE |
| | 41 | | 0319461231F | 1.00 | REGISTRO | REGULATOR | REGULATEUR | REGLER | REGULADOR |
| | 42 | | 0521960114A | 1.00 | SUPPORTO | SUPPORT | SUPPORT | STUETZE | SOPORTE |
| | 43 | | 0319461227H | 1.00 | BRONZINA | BRASS | COUSSINET | BRONZEBUCHSE | BUJE |
| | 44 | | 0319461225D | 1.00 | PERNO | PIN | PIVOT | STIFT | PERNO |
| | 45 | | 0319461228A | 1.00 | RUOTA | WHEEL | ROUE | RAD | RUEDA |
| | 46 | | 0319461229C | 1.00 | PERNO | PIN | PIVOT | STIFT | PERNO |
| | 47 | | 0000606040G | 1.00 | CUSCINETTO | BEARING | ROULEMENT | LAGER | COJINETE |
| | 48 | | 0319461226F | 1.00 | BIELLA | CONNECTING ROD | BIELLE | PLEUELSTANGE | BIELA |
| | 49 | | 0552100100D | 1.00 | SUPPORTO | SUPPORT | SUPPORT | STUETZE | SOPORTE |
| | 51 | | 0001500562L | 1.00 | REGOLATORE DI PRESSIONE | PRESSURE REGULATOR | REGULATEUR DE PRESSION | DRUCKREGLER | ND |
| | 52 | | 0001505066C | 1.00 | MANOMETRO | PRESSURE GAUGE | MANOMETRE | MANOMETER | MANOMETRO |
| | 53 | | 0552100124E | 1.00 | QUADRO DI COMANDO | CONTROL BOARD | PANNEAU DE COMMANDE | STEUERTAFEL | CUADRO DE MANDOS |
| | 54 | | 0001509142H | 1.00 | VALVOLA | VALVE | SOUPAPE | VENTIL | VALVULA |
| | 55 | | 0001503029C | 1.00 | FILTRO | FILTER | FILTRE | FILTER | FILTRO |
| | 56 | | 0001502095A | 1.00 | VALVOLA | VALVE | SOUPAPE | VENTIL | VALVULA |
| | 57 | | 2752100002C | 1.00 | CENTRALINA PNEUMATICA | | | | |
| | 58 | | 0001340155C | 1.00 | CUSTODIA | HOUSING | GAINE | GEHAEUSE | CUSTODIA |
| | 59 | | 0001342010G | 1.00 | INTERRUTT.MAGNETOTERMICO | THERMOMAGNETIC SWITCH | INTERRUPTEUR THERMOMAGN. | THERMOMAGNET.SCHALTER | INT.MAGNET. |
| | 59 | | 0001342011L | 1.00 | INTERRUTT.MAGNETOTERMICO | THERMOMAGNETIC SWITCH | INTERRUPTEUR THERMOMAGN. | THERMOMAGNET.SCHALTER | INT.MAGNET. |
| | 59 | | 0001342012B | 1.00 | INTERRUTT.MAGNETOTERMICO | THERMOMAGNETIC SWITCH | INTERRUPTEUR THERMOMAGN. | THERMOMAGNET.SCHALTER | INT.MAGNET. |
| | 59 | | 0001342013D | 1.00 | INTERRUTT.MAGNETOTERMICO | THERMOMAGNETIC SWITCH | INTERRUPTEUR THERMOMAGN. | THERMOMAGNET.SCHALTER | INT.MAGNET. |
| | 59 | | 0001343017D | 1.00 | INTERRUTT.MAGNETOTERMICO | THERMOMAGNETIC SWITCH | INTERRUPTEUR THERMOMAGN. | THERMOMAGNET.SCHALTER | INT.MAGNET. |
| | 60 | | 0001340156E | 1.00 | CUSTODIA | HOUSING | GAINE | GEHAEUSE | CUSTODIA |
| | 61 | | 0001344087C | 1.00 | ELETTROVALVOLA | SOLENOID VALVE | ELECTROVALVE | MAGNETVENTIL | ELECTROVALV. |

| N | P | C | CODICE | Q.TY | DENOMINAZIONE | DESCRIPTION | DESIGNATION | BEZEICHNUNG | DENOMINACION |
|---|---|---|---|---|---|---|---|---|---|
| | 62 | | 0001503331C | 1.00 | VALVOLA | VALVE | SOUPAPE | VENTIL | VALVULA |
| | 100 | | 2952100006F | 1.00 | CARICATORE | LOADER | CHARGEUR | BESCHICKUNGSVORRICHTUNG | CARGADOR |
| | 100 | | 2952100007H | 1.00 | CARICATORE CS1 | LOADER | CHARGEUR | BESCHICKUNGSVORRICHTUNG | CARGADOR |

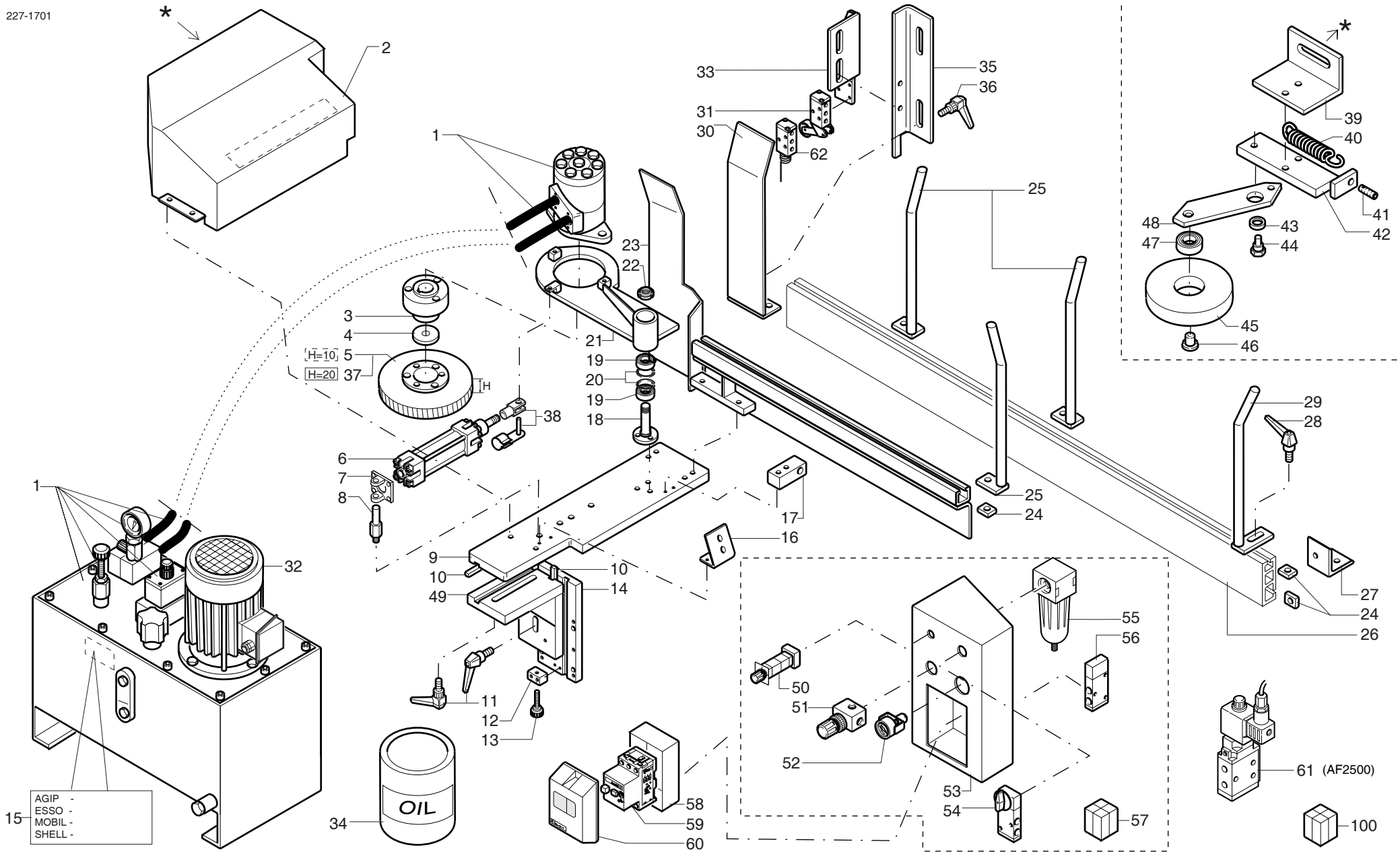


| | | | |
|---|---|---|---|
| scm | SUPERSET XL | CARICATORE CS1 - (01.01.1901 -> - p.20,06,2007)<br>CS1 FEEDER - CHARGEUR CS1<br>ZUFUEHRUNGSMAGAZIN CS1 - CARGADOR CS1 | 227-1701-0 |

| scm | SUPERSET XL | ESTRATTORE - (p.20,06,2007)<br>EXTRACTOR - EXTRACTEUR<br>AUSZIEHWERKZEUG - EXTRACTOR | 227-1801-0 |
|---|---|---|---|

| N | P | C | CODICE | Q.TY | DENOMINAZIONE | DESCRIPTION | DESIGNATION | BEZEICHNUNG | DENOMINACION |
|---|---|---|---|---|---|---|---|---|---|
| | 01.01.1901 -> 01.01.3000 | | | | Note: ----- | | | | |
| | 1 | | 0324141308C | 6.00 | PERNO | PIN | PIVOT | BOLZEN | PERNO |
| | 2 | | 0322741024B | 3.00 | PULEGGIA | PULLEY | POULIE | RIEMENSCHEIBE | POLEA |
| | 3 | | 0000644033L | 6.00 | ANELLO SEEGER | CIRCLIP | CIRCLIP | SEEGERRING | SEEGER |
| | 4 | | 0000606040G | 7.00 | CUSCINETTO | BEARING | ROULEMENT | LAGER | COJINETE |
| | 5 | | 0324141309E | 6.00 | DISTANZIALE | SPACER | ENTRETOISE | DISTANZSTUECK | DISTANCIADOR |
| | 6 | | 0522741014E | 1.00 | BRACCIO | ARM | BRAS | ARM | BRAZO |
| | 7 | | 0000613022H | 5.00 | RALLA | WASHER | CRAPAUDINE | SCHEIBE | RANGUA |
| | 8 | | 0000601070E | 9.00 | BOCCOLA | BUSHING | DOUILLE | BUCHSE | CASQUILLO |
| | 9 | | 0324141315G | 5.00 | PERNO | PIN | PIVOT | BOLZEN | PERNO |
| | 10 | | 0331550282F | 4.00 | PULEGGIA | PULLEY | POULIE | RIEMENSCHEIBE | POLEA |
| | 11 | | 0524141312E | 4.00 | BIELLA | CONNECTING ROD | BIELLE | PLEUELSTANGE | BIELA |
| | 12 | | 0722741026E | 1.00 | MOTORE ELETTRICO | ELECTRIC MOTOR | MOTEUR ELECTRIQUE | ELEKTRISCHER | MOTOR ELECTRICO |
| | 13 | | 0722741025C | 1.00 | RIDUTTORE | REDUCING GEAR | REDUCTEUR | GETRIEBE | REDUCTOR |
| | 14 | | 0322741032H | 1.00 | FLANGIA | FLANGE | FLASQUE | FLANSCH | BRIDA |
| | 15 | | 0322741029C | 1.00 | CILINDRO | CYLINDER | CYLINDRE | ZYLINDER | CILINDRO |
| | 16 | | 0000645062B | 1.00 | LINGUETTA | FEATHER KEY | LANGUETTE | FEDERKEIL | LINGUETA |
| | 17 | | 0322741033A | 1.00 | PERNO | PIN | PIVOT | BOLZEN | PERNO |
| | 18 | | 0000613613C | 1.00 | RUOTA FOLLE | IDLE WHEEL | ROUE FOLLE | LOSRAD | RUEDA LIBRE |
| | 19 | | 0000606009C | 1.00 | CUSCINETTO | BEARING | ROULEMENT | LAGER | COJINETE |
| | 21 | | 0322741031F | 1.00 | CANNOTTO | SLEEVE | FOURREAU | BUECHSE | CANUTO |
| | 22 | | 0000606112A | 1.00 | CUSCINETTO | BEARING | ROULEMENT | LAGER | COJINETE |
| | 23 | | 0322741030D | 1.00 | MOZZO | HUB | MOYEU | NABE | CUBO |
| | 24 | | 0722741008G | 1.00 | PULEGGIA | PULLEY | POULIE | RIEMENSCHEIBE | POLEA |
| | 25 | | 0000645020C | 1.00 | LINGUETTA | FEATHER KEY | LANGUETTE | FEDERKEIL | LINGUETA |
| | 26 | | 0000645053C | 1.00 | LINGUETTA | FEATHER KEY | LANGUETTE | FEDERKEIL | LINGUETA |
| | 27 | | 0001338948C | 1.00 | MOTORE TRIF. | 3.PH. MOTOR | 3 PH. MOTEUR | 3-DREIPHASENMOTOR | MOT. TRIFAS |
| | 28 | | 0739736141H | 1.00 | ENCODER | ENCODER | ENCODER | ENCODER | ENCODER |
| | 29 | | 0321930112E | 1.00 | SUPPORTO | SUPPORT | SUPPORT | STUETZE | SOPORTE |
| | 30 | | 0322741012F | 2.00 | GIUNTO | JOINT | JOINT | KUPPLUNG | JUNTA |
| | 31 | | 0000641179F | 1.00 | RIDUTTORE | REDUCING GEAR | REDUCTEUR | GETRIEBE | REDUCTOR |
| | 32 | | 0522741009E | 2.00 | SQUADRO | SQUARE SUPPORT | EQUERRE | WINKEL SUPPORT | ESCUADRA |
| | 33 | | 1416330018C | 2.00 | FLANGIA | FLANGE | FLASQUE | FLANSCH | ANILLO |
| | 34 | | 0322741011D | 2.00 | VITE | SCREW | VIS | SCHRAUBE | TORNILLO |
| | 35 | | 0000613045G | 8.00 | RALLA | WASHER | CRAPAUDINE | SCHEIBE | RANGUA |
| | 36 | | 0000613041H | 4.00 | GABBIA A RULLINI | ROLLER CAGE | CAGE A ROULEAUX | WALZENKAEFIG | COJINETE |
| | 37 | | 0316330020C | 2.00 | RONDELLA | WASHER | RONDELLE | SCHEIBE | ARANDELA |
| | 38 | | 0000641178D | 1.00 | RIDUTTORE | REDUCING GEAR | REDUCTEUR | GETRIEBE | REDUCTOR |
| | 39 | | 0322741013H | 1.00 | BARRA | BAR | BARRE | STANGE | BARRA |
| | 40 | | 0322741002E | 1.00 | PIASTRA | PLATE | PLAQUE | PLATTE | PLANCHA |

| N | P | C | CODICE | Q.TY | DENOMINAZIONE | DESCRIPTION | DESIGNATION | BEZEICHNUNG | DENOMINACION |
|---|---|---|---|---|---|---|---|---|---|
| | 41 | | 0322741001C | 1.00 | PIASTRA | PLATE | PLAQUE | PLATTE | PLANCHA |
| | 42 | | 0322741004L | 1.00 | PERNO | PIN | PIVOT | BOLZEN | PERNO |
| | 43 | | 0000613050G | 1.00 | RALLA | WASHER | CRAPAUDINE | SCHEIBE | RANGUA |
| | 44 | | 0000631213F | 2.00 | GUIDA C/PATTINO SFERE | GUIDE WITH BALL BLOCK | GUIDE AVEC PATIN | FUEHRUNG MIT GLEITSCHUH | GUIA CON PATIN REC.ESF. |
| | 45 | | 0317510822E | 1.00 | GUIDA PORTACAMME | CAM HOLDER GUIDE | GUIDE PORTE-CAMES | NOCKENHALTER | GUIA PORTA EXC. |
| | 46 | | 0322741016E | 1.00 | SQUADRO | SQUARE SUPPORT | EQUERRE | WINKEL SUPPORT | ESCUADRA |
| | 47 | | 0001308055A | 1.00 | FINECORSA | MICROSWITCH | FIN DE COURSE | MIKROSCHALTER | FIN CARRERA |
| | 48 | | 0322741015C | 1.00 | SQUADRO | SQUARE SUPPORT | EQUERRE | WINKEL SUPPORT | ESCUADRA |
| | 49 | | 0322741010B | 2.00 | SQUADRO | SQUARE SUPPORT | EQUERRE | WINKEL SUPPORT | ESCUADRA |
| | 50 | | 0316333847B | 2.00 | MADREVITE TPN.20X5 | NUT SCREW | VIS-MERE | MUTTERGEWINDE | TUERCA |
| | 51 | | 0000605577F | 1.00 | CINGHIA DENTATA | TOOTHED BELT | COURROIE DENTEE | ZAHNRIEMEN | CORREA DENTADA |
| | 52 | | 0331550204B | 4.00 | MOLLA | SPRING | RESSORT | FEDER | RESORTE |
| | 53 | | 0522741003B | 1.00 | PIATTAFORMA | PLATFORM | PLATEFORME | PLATTFORM | PLATAFORMA |
| | 54 | | 0303041299G | 1.00 | MOLLA | SPRING | RESSORT | FEDER | RESORTE |
| | 55 | | 0310858102C | 1.00 | BLOCCHETTO | BLOCK | BLOC | BLOCK | BLOQUE |

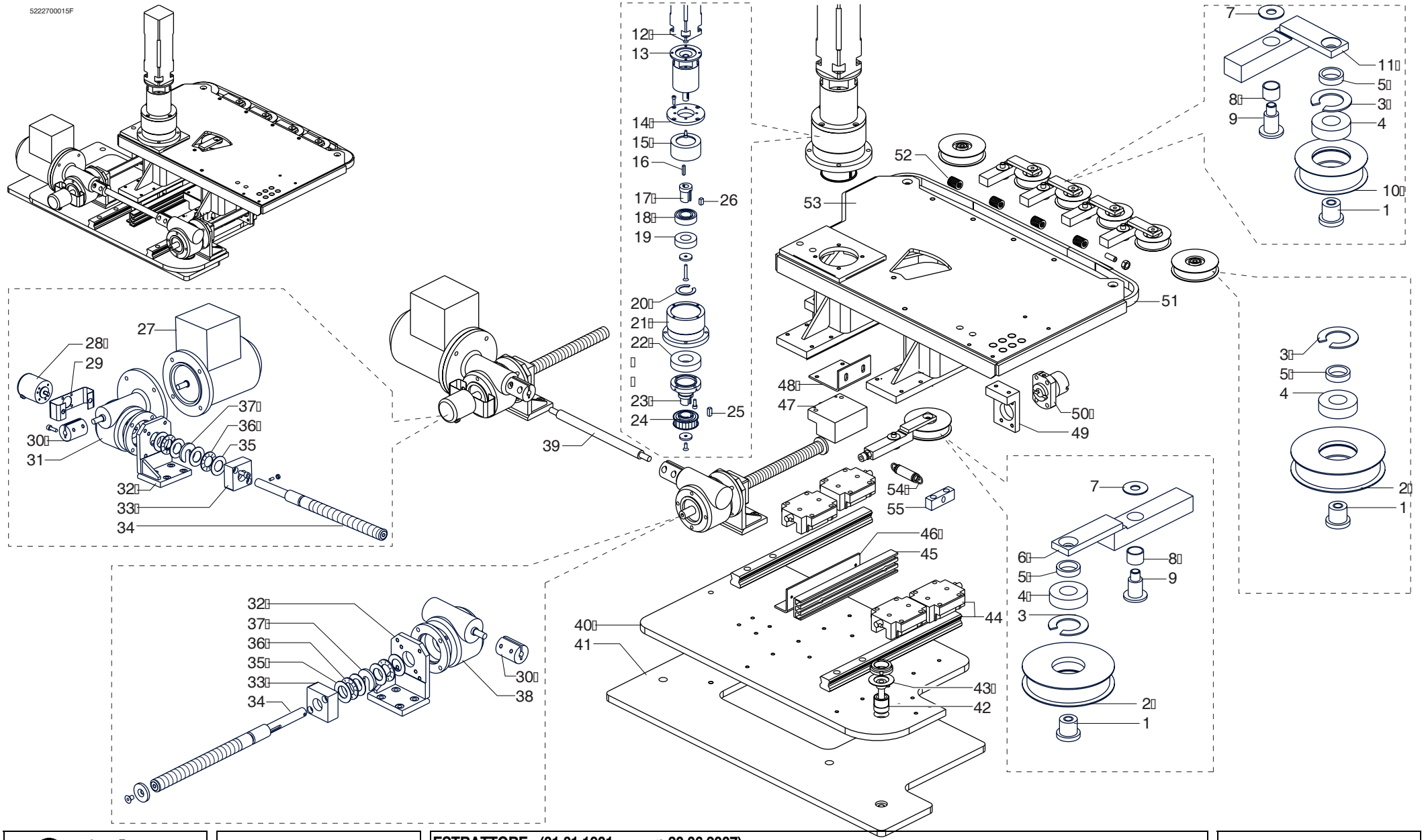


| scm | SUPERSET XL | ESTRATTORE - (01.01.1901 -> - p.20,06,2007)<br>EXTRACTOR - EXTRACTEUR<br>AUSZIEHWERKZEUG - EXTRACTOR | 227-1801-0 |
|---|---|---|---|

| scm | SUPERSET XL | RITORNO PEZZI - (p.20,06,2007)<br>PIECE RETURN DEVICE - DISPOSITIF RETOUR PIECES<br>STUECKRUECKLAUFVORRICHTUNG - REGRESO PIEZAS | 227-1901-0 |
|---|---|---|---|

| N | P | C | CODICE | Q.TY | DENOMINAZIONE | DESCRIPTION | DESIGNATION | BEZEICHNUNG | DENOMINACION |
|---|---|---|---|---|---|---|---|---|---|
| | 01.01.1901 -> 01.01.3000 | | | | Note: ----- | | | | |
| | 1 | | 2911140900E | 1.00 | RITORNO PEZZI L=5500 | PIECE RETURN DEVICE | DISPOSITIF RETOURN PIECES | STUECKRUECKLAUFVORRICHTUN | REGRESO PIEZAS |
| | 1 | | 2911140901G | 1.00 | RITORNO PEZZI L=6340 | PIECE RETURN DEVICE | DISPOSITIF RETOURN PIECES | STUECKRUECKLAUFVORRICHTUN | REGRESO PIEZAS |
| | 1 | | 2911140902L | 1.00 | RITORNO PEZZI L=7500 | PIECE RETURN DEVICE | DISPOSITIF RETOURN PIECES | STUECKRUECKLAUFVORRICHTUN | REGRESO PIEZAS |
| | 1 | | 2911140903B | 1.00 | RITORNO PEZZI L=8000 | PIECE RETURN DEVICE | DISPOSITIF RETOURN PIECES | STUECKRUECKLAUFVORRICHTUN | REGRESO PIEZAS |
| | 1 | | 2911140909E | 1.00 | RITORNO PEZZI L=4500 | PIECE RETURN DEVICE | DISPOSITIF RETOURN PIECES | STUECKRUECKLAUFVORRICHTUN | REGRESO PIEZAS |
| | 1 | | 2911140925H | 1.00 | RITORNO PEZZI SPEC.L=6340 | PIECE RETURN DEVICE | DISPOSITIF RETOURN PIECES | STUECKRUECKLAUFVORRICHTUN | REGRESO PIEZAS |

BARBIERI MAURO
Progettazione e costruzione
dim acchine speciali
M ovim entazione e autom azioni
per falegnam eria
Via Marchionale 52-46046 Medole (MN)
Tel. 0376 898263 Fax 0376 898821 www.barbierimauro.com

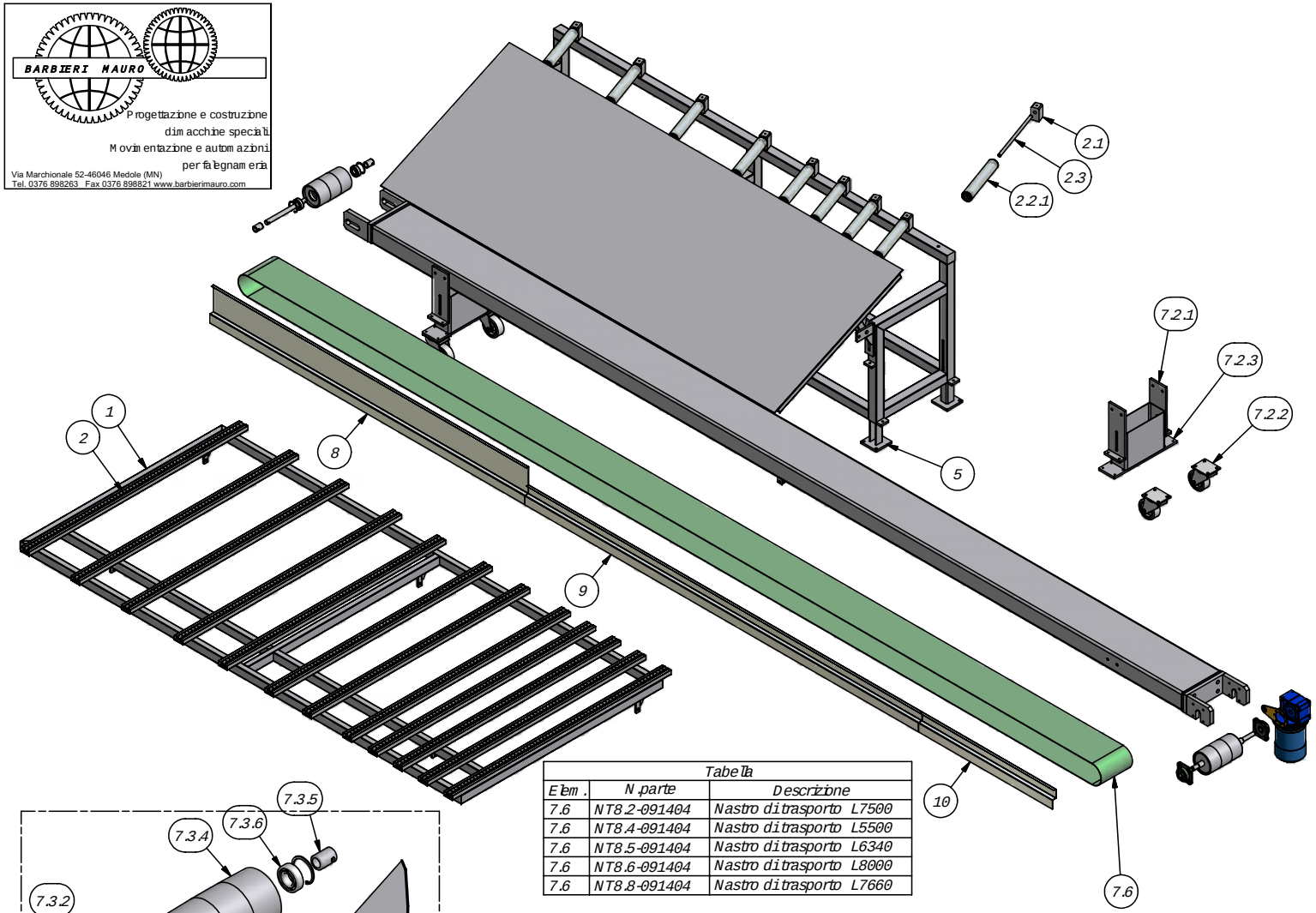


| Elenco parti | | |
|---|---|---|
| ELEM. | NUMERO PARTE | DESCRIZIONE |
| 2.1 | 0914041 | Supp.rullo |
| 2.2 | BM1608-A100 | D50 Z C300 |
| 2.3 | P14 300+37 | Albero rullo scarico |
| 5 | 091404-A4s | Tronch. piede |
| 7.2.1 | 102603-A9s | Regolazione altezza |
| 7.2.2 | BM50005 | Ruota D100 girevole |
| 7.2.3 | 102603-A2.4s | Struttura piede con ruote |
| 7.3.1 | BM150016 | Pst.fiss.flange L200 |
| 7.3.2 | BM150046 | Albernino rullo folle |
| 7.3.3 | BM150023-V3 | Flangia rullo folle D113 |
| 7.3.4 | BM3000-A2F | Rullo folle |
| 7.3.5 | BM3000-D1 | Distanziale rullo libero |
| 7.3.6 | DIN 625 T1 - 6205 | Cuscinetto a sfere |
| 7.4 | 16081-R5 | Rullo appoggio nastro |
| 7.7 | BM 2.3 | Riduttore GR040 i15 B5 P71 |
| 7.8 | BM 1.1 | 0.37 kw B5 P71 4P |
| 7.9.1 | BM150016 | Pst.fiss.flange L200 |
| 7.9.2 | BM150022-020-115 | Flangia supporto |
| 7.9.3 | BM150010 | Rullo motorizzato Link 200 |
| 7.9.4 | UCF204E | Supporto bearing |
| 7.10 | BM AR40 | Asta direazione GR40 |
| 8 | BM15005L | Spondina alta |
| 9 | BM15001L-01 | Spondina bassa |
| 10 | BM15001L-02 | Spondina bassa |

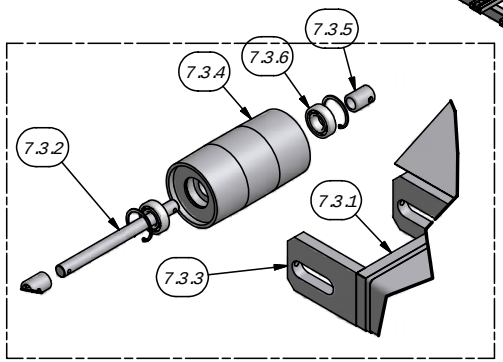


| Tabella | | |
|---|---|---|
| Elem. | N.parte | Descrizione |
| 7.6 | NT8.2-091404 | Nastro di trasporto L7500 |
| 7.6 | NT8.4-091404 | Nastro di trasporto L5500 |
| 7.6 | NT8.5-091404 | Nastro di trasporto L6340 |
| 7.6 | NT8.6-091404 | Nastro di trasporto L8000 |
| 7.6 | NT8.8-091404 | Nastro di trasporto L7660 |

## OPTIONAL

Telaio scarico a ruote libere

| Elenco parti | | |
|---|---|---|
| ELEM | NUMERO PARTE | DESCRIZIONE |
| 1 | 091404-A3.4s | Telaio SFR scarico con Petrail |
| 2 | 1512-A20 | Petrail L1735 |

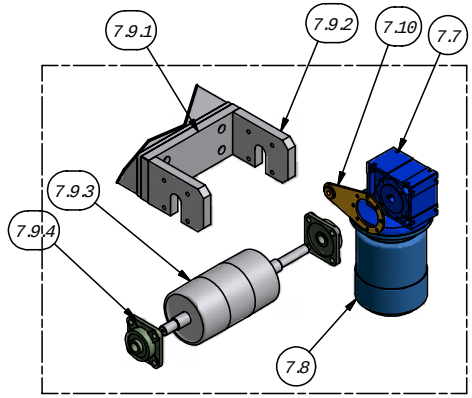


scm

**SUPERSET XL**

**RITORNO PEZZI - (01.01.1901 -> - p.20,06,2007)**
**PIECE RETURN DEVICE - DISPOSITIF RETOUR PIECES**
**STUECKRUECKLAUFVORRICHTUNG - REGRESO PIEZAS**

**227-1901-0**

| scm | SUPERSET XL | GR.TTL INTEGRATO C/CONTROL.A MICROPROCES - (p.20,06,2007)<br>-<br>- | 227-5201-0 |
|---|---|---|---|

| N | P | C | CODICE | Q.TY | DENOMINAZIONE | DESCRIPTION | DESIGNATION | BEZEICHNUNG | DENOMINACION |
|---|---|---|---|---|---|---|---|---|---|
| | 01.01.1901 -> 01.01.3000 | | | | Note: ----- | | | | |
| | 1 | | 0719412602C | 1.00 | MANIGLIA | HANDLE | POIGNEE | HANDGRIFF | MANIJA |
| | 2 | | 0000304489E | 1.00 | VITE | SCREW | VIS | SCHRAUBE | TORNILLO |
| | 3 | | 0310140110A | 1.00 | PERNO | PIN | PIVOT | BOLZEN | PERNO |
| | 4 | | 0321940807C | 1.00 | PERNO | PIN | PIVOT | BOLZEN | PERNO |
| | 5 | | 0000301429E | 1.00 | GHIERA | RING NUT | EMBOUT | NUTMUTTER | COLLAR |
| | 6 | | 0321940801L | 1.00 | TESTATA | HEAD | TETE | KOPF | CABEZAL |
| | 7 | | 0321940804F | 1.00 | ROSETTA | WASHER | RONDELLE | SCHEIBE | ARANDELA |
| | 8 | | 0721940808D | 1.00 | CILINDRO PNEUMATICO | PNEUMATIC CYLINDER | CYLINDRE PNEUMATIQUE | PNEUMATIKZYLINDER | CILINDRO NEUMATICO |
| | 9 | | 0311131401L | 1.00 | SUPPORTO | SUPPORT | SUPPORT | STUETZE | SOPORTE |
| | 10 | | 0000644074F | 1.00 | ANELLO | RING | BAGUE | RING | ANILLO |
| | 11 | | 0000606205H | 2.00 | CUSCINETTO | BEARING | ROULEMENT | LAGER | COJINETE |
| | 12 | | 0321930456E | 1.00 | ANELLO | RING | BAGUE | RING | ANILLO |
| | 13 | | 0311131402B | 1.00 | STAFFA | BRACKET | BRIDE | BUEGEL | ABRAZADERA |
| | 14 | | 0001308592L | 1.00 | FINECORSA | LIMIT SWITCH | FIN DE COURSE | ENDSCHALTER | FIN CARRERA |
| | 15 | | 0000304307L | 1.00 | GRANO | DOWEL | VIS SIX PANS CREUX | DUEBEL | PASADOR |
| | 16 | | 0000304302H | 1.00 | VITE | SCREW | VIS | SCHRAUBE | TORNILLO |
| | 17 | | 0511131403H | 1.00 | BANDELLA | GUARD | PROTECTION | SCHUTZ | BANDA |
| | 18 | | 0000301363D | 1.00 | DADO | NUT | ECROU | MUTTER | TUERCA |
| | 19 | | 0000644292H | 1.00 | ANELLO RASCHIATORE | SCRAPING RING | BAGUE DE RACLAGE | ABSTREIFRING | ANILLO RASCADOR |
| | 20 | | 0321940806A | 1.00 | PERNO | PIN | PIVOT | BOLZEN | PERNO |
| | 21 | | 0000309369F | 1.00 | VITE | SCREW | VIS | SCHRAUBE | TORNILLO |
| | 22 | | 0319016123G | 1.00 | POMOLO | BALL GRIP | POIGNEE | KUGELGRIFF | POMO |
| | 23 | | 0316332636C | 1.00 | PASTIGLIA | PAD | PASTILLE | BELAG | PASTILLA |
| | 24 | | 0000301559A | 1.00 | GHIERA | RING NUT | EMBOUT | NUTMUTTER | COLLAR |
| | 25 | | 0321940802B | 1.00 | BIELLA | CONNECTING ROD | BIELLE | PLEUELSTANGE | BIELA |
| | 26 | | 0321940805H | 1.00 | PERNO | PIN | PIVOT | BOLZEN | PERNO |
| | 27 | | 0510140009B | 1.00 | SUPPORTO | SUPPORT | SUPPORT | STUETZE | SOPORTE |
| | 28 | | 0311131407C | 1.00 | CARTER | COVER | CARTER | DECKEL | CARTER |
| | 29 | | 0001308846L | 1.00 | FINECORSA PER CILINDRO | LIMIT SWITCH | FIN DE COURSE | ENDSCHALTER | FIN CARRERA |
| | 30 | | 0001500316H | 1.00 | SUPPORTO | SUPPORT | SUPPORT | STUETZE | SOPORTE |
| | 31 | | 0001502999L | 1.00 | CILINDRO PNEUMATICO | PNEUMATIC CYLINDER | CYLINDRE PNEUMATIQUE | PNEUMATIKZYLINDER | CILINDRO NEUMATICO |
| | 32 | | 0311131406A | 1.00 | LAMIERA | PLATE | TOLE | BLECH | CHAPA |
| | 33 | | 0000309224H | 1.00 | VITE | SCREW | VIS | SCHRAUBE | TORNILLO |
| | 34 | | 0311131409G | 1.00 | DISTANZIALE | SPACER | ENTRETOISE | DISTANZSTUECK | DISTANCIADOR |
| | 35 | | 0511131408L | 1.00 | SUPPORTO | SUPPORT | SUPPORT | STUETZE | SOPORTE |
| | 36 | | 0000309181F | 4.00 | VITE | SCREW | VIS | SCHRAUBE | TORNILLO |
| | 37 | | 0000305181B | 4.00 | ROSETTA | WASHER | RONDELLE | SCHEIBE | ARANDELA |
| | 38 | | 0000301301C | 1.00 | DADO | NUT | ECROU | MUTTER | TUERCA |
| | 39 | | 0000304245G | 1.00 | VITE | SCREW | VIS | SCHRAUBE | TORNILLO |

| N | P | C | CODICE | Q.TY | DENOMINAZIONE | DESCRIPTION | DESIGNATION | BEZEICHNUNG | DENOMINACION |
|---|---|---|---|---|---|---|---|---|---|
| | 40 | | 0000309145A | 3.00 | VITE | SCREW | VIS | SCHRAUBE | TORNILLO |
| | 41 | | 0338435338B | 1.00 | SUPPORTO | SUPPORT | SUPPORT | STUETZE | SOPORTE |
| | 42 | | 0739715095E | 1.00 | GUIDA | GUIDE | GUIDE | FUEHRUNG | GUIA |
| | 43 | | 0000305121E | 4.00 | ROSETTA | WASHER | RONDELLE | SCHEIBE | ARANDELA |
| | 44 | | 0000309123D | 4.00 | VITE | SCREW | VIS | SCHRAUBE | TORNILLO |
| | 45 | | 0001340606A | 1.00 | MODULO DI TRASLAZ. | | | | |
| | 46 | | 0311131410H | 1.00 | PIASTRA | PLATE | PLAQUE | PLATTE | PLANCHA |
| | 47 | | 0311131405H | 1.00 | PERNO | PIN | PIVOT | BOLZEN | PERNO |
| | 48 | | 0000606040G | 1.00 | CUSCINETTO | BEARING | ROULEMENT | LAGER | COJINETE |
| | 49 | | 0319461228A | 1.00 | RUOTA | WHEEL | ROUE | RAD | RUEDA |
| | 50 | | 0001340607C | 1.00 | BANDELLA MAGNETICA | GUARD | PROTECTION | SCHUTZ | BANDA |
| | 51 | | 0311131404F | 1.00 | ATTACCO | CONNECTING ROD | BARRE FIXATION | STAB | CONEXION |
| | 52 | | 0001344082B | 1.00 | ELETTROVALVOLA V.110 | SOLENOID VALVE | ELECTROVALVE | MAGNETVENTIL | ELECTROVALVULA |
| | 53 | | 0722740014H | 1.00 | GIUNTO CARDANICO | UNIVERSAL JOINT | JOINT A CARDAN | KARDANGELENK | ARTICULACION CARDANICA |
| | 54 | | 0000644056H | 1.00 | ANELLO SEEGER | CIRCLIP | CIRCLIP | SEEGERRING | SEEGER |
| | 55 | | 0000644278L | 1.00 | ANELLO SEEGER | CIRCLIP | CIRCLIP | SEEGERRING | SEEGER |
| | 56 | | 0000606102L | 1.00 | CUSCINETTO | BEARING | ROULEMENT | LAGER | COJINETE |
| | 57 | | 0001904525A | 1.00 | RACCORDO | FITTING | RACCORD | ANSCHLUSS | CONEXION |
| | 58 | | 0001904160E | 1.00 | RACCORDO | FITTING | RACCORD | ANSCHLUSS | CONEXION |
| | 59 | | 0001908001C | 1.00 | RIDUZ.ES.ALT | REDUCING PIECE (THICK) MF | PIECE RED. HEX.EPAIS | REDUZIERSTUECK | RED.MH EX.ALTO |
| | 60 | | 0721940544C | 1.00 | CILINDRO PNEUMATICO | PNEUMATIC CYLINDER | CYLINDRE PNEUMATIQUE | PNEUMATIKZYLINDER | CILINDRO NEUMATICO |
| | 61 | | 0001308592L | 1.00 | FINECORSA | LIMIT SWITCH | FIN DE COURSE | ENDSCHALTER | FIN CARRERA |
| | 62 | | 0311131411A | 1.00 | CAMMA | CAM | CAME | NOCKEN | EXCENTRICO |
| | 63 | | 0322740261C | 1.00 | FORCELLA | FORK | FOURCHE | GABEL | HORQUILLA |
| | 64 | | 0000609149C | 1.00 | CUSC.RAD.A RULLINI | RADIAL ROLLER BEARING | ROULEMENT RAD. A ROULEAUX | RADIALROLLENLAGER | COJ.RAD.A ROD. |
| | 65 | | 0000645054E | 1.00 | LINGUETTA | FEATHER KEY | LANGUETTE | FEDERKEIL | LINGUETA |
| | 66 | | 0000601248D | 2.00 | BOCCOLA | BUSHING | DOUILLE | BUCHSE | CASQUILLO |
| | 67 | | 0322740012E | 1.00 | ALBERO | SHAFT | ARBRE | WELLE | EJE |
| | 68 | | 0000613086D | 1.00 | RALLA | BEARING | CRAPAUDINE | SCHEIBE | RANGUA |
| | 69 | | 0000644268H | 1.00 | ANELLO SEEGER | CIRCLIP | CIRCLIP | SEEGERRING | SEEGER |
| | 70 | | 0001908042L | 1.00 | SILENZIATORE | SILENCER | SILENCIEUX | SCHALLDAEMPFER | SILENCIADOR |
| | 71 | | 0322740266D | 2.00 | LINGUETTA | FEATHER KEY | LANGUETTE | FEDERKEIL | LINGUETA |
| | 72 | | 0322740262E | 1.00 | ALBERO | SHAFT | ARBRE | WELLE | EJE |
| | 73 | | 0000609241G | 1.00 | GUARNIZIONE | GASKET | JOINT | DICHTUNG | JUNTA |
| | 74 | | 0000301361L | 1.00 | DADO | NUT | ECROU | MUTTER | TUERCA |
| | 75 | | 0322740268H | 1.00 | CONO | CONE | CONE | KEGEL | CONO |
| | 76 | | 0322740264L | 1.00 | BLOCCAGGIO | LOCKING DEVICE | BLOCAGE | SPERRE | BLOQUEO |
| | 77 | | 0322740265B | 1.00 | TIRANTE | TIE-ROD | TIRANT | ZUGBOLZEN | TIRANTE |
| | 78 | | 0322740263G | 1.00 | ALBERO | SHAFT | ARBRE | WELLE | EJE |
| | 79 | | 0000305340L | 1.00 | ROSETTA | WASHER | RONDELLE | SCHEIBE | ARANDELA |

| scm | SUPERSET XL | GR.TTL INTEGRATO C/CONTROL.A MICROPROCES - (p.20,06,2007)<br>-<br>- | 227-5201-0 |
|---|---|---|---|

| N | P | C | CODICE | Q.TY | DENOMINAZIONE | DESCRIPTION | DESIGNATION | BEZEICHNUNG | DENOMINACION |
|---|---|---|---|---|---|---|---|---|---|
| | 80 | | 0000309306C | 1.00 | VITE | SCREW | VIS | SCHRAUBE | TORNILLO |
| | 81 | | 0322740267F | 1.00 | GHIERA | RING NUT | EMBOUT | NUTMUTTER | COLLAR |

5222705029B

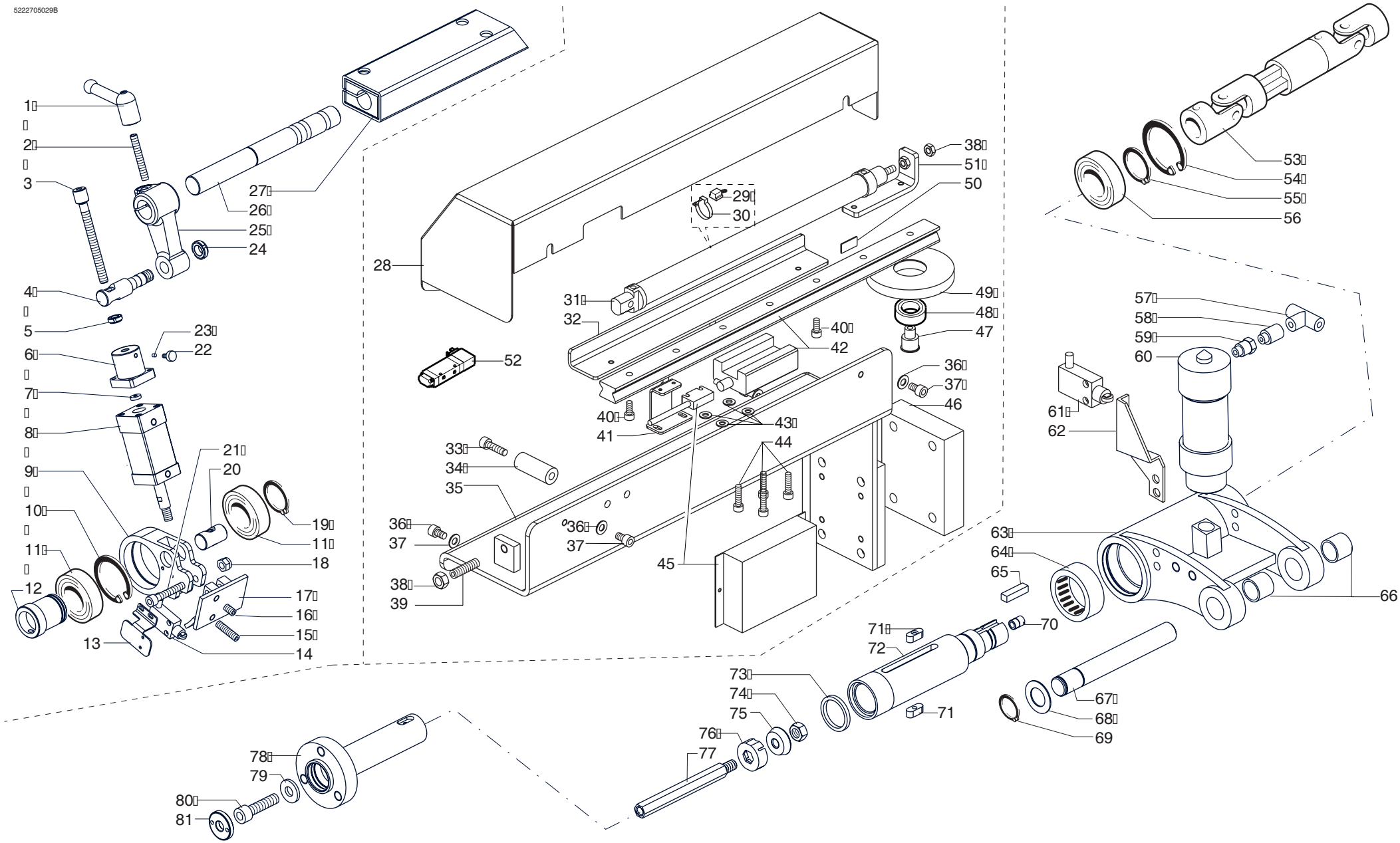


| scm | SUPERSET XL | GR.TTL INTEGRATO C/CONTROL.A MICROPROCES - (01.01.1901 -> - p.20,06,2007)<br>-<br>- | 227-5201-0 |
|---|---|---|---|

| scm | SUPERSET XL | ALLESTIMENTO SPECIALE - (p.20,06,2007)<br>-<br>- | 227-5202-0 |
|---|---|---|---|

| N | P | C | CODICE | Q.TY | DENOMINAZIONE | DESCRIPTION | DESIGNATION | BEZEICHNUNG | DENOMINACION |
|---|---|---|---|---|---|---|---|---|---|
| | 01.01.1901 -> 01.01.3000 | | | | Note: ----- | | | | |
| | 1 | | 0322730901L | 1.00 | SCARPA PRESSATRICE D=6,13 | SHOE | SABOT | DRUCKSCHUH | PLANCHA PRENSORA |
| | 2 | | 0322730902B | 1.00 | SCARPA PRESSATORE D=8,13 | SHOE | SABOT | DRUCKSCHUH | PLANCHA PRENSORA |
| | 3 | | 0322730903D | 1.00 | SCARPA PRESSATORE D=10 | SHOE | SABOT | DRUCKSCHUH | PLANCHA PRENSORA |
| | 4 | | 0322730904F | 1.00 | SCARPA PRESSATORE D=12,15 | SHOE | SABOT | DRUCKSCHUH | PLANCHA PRENSORA |
| | 5 | | 0322730905H | 1.00 | SCARPA PRESSATORE D=14,15 | SHOE | SABOT | DRUCKSCHUH | PLANCHA PRENSORA |
| | 6 | | 0322730911A | 1.00 | RULLO D=6,13 | ROLLER | ROULEAU | WALZE | RODILLO |
| | 7 | | 0322730912C | 1.00 | RULLO D=8,13 | ROLLER | ROULEAU | WALZE | RODILLO |
| | 8 | | 0322730913E | 1.00 | RULLO D=10 | ROLLER | ROULEAU | WALZE | RODILLO |
| | 9 | | 0322730914G | 1.00 | RULLO D=12,15 | ROLLER | ROULEAU | WALZE | RODILLO |
| | 10 | | 0322730915L | 1.00 | RULLO D=14,15 | ROLLER | ROULEAU | WALZE | RODILLO |
| | 11 | | 0321940815L | 2.00 | ANELLO | RING | BAGUE | RING | ANILLO |
| | 12 | | 0322730158C | 1.00 | GUIDA | GUIDE | GUIDE | FUEHRUNG | GUIA |

5222770503B

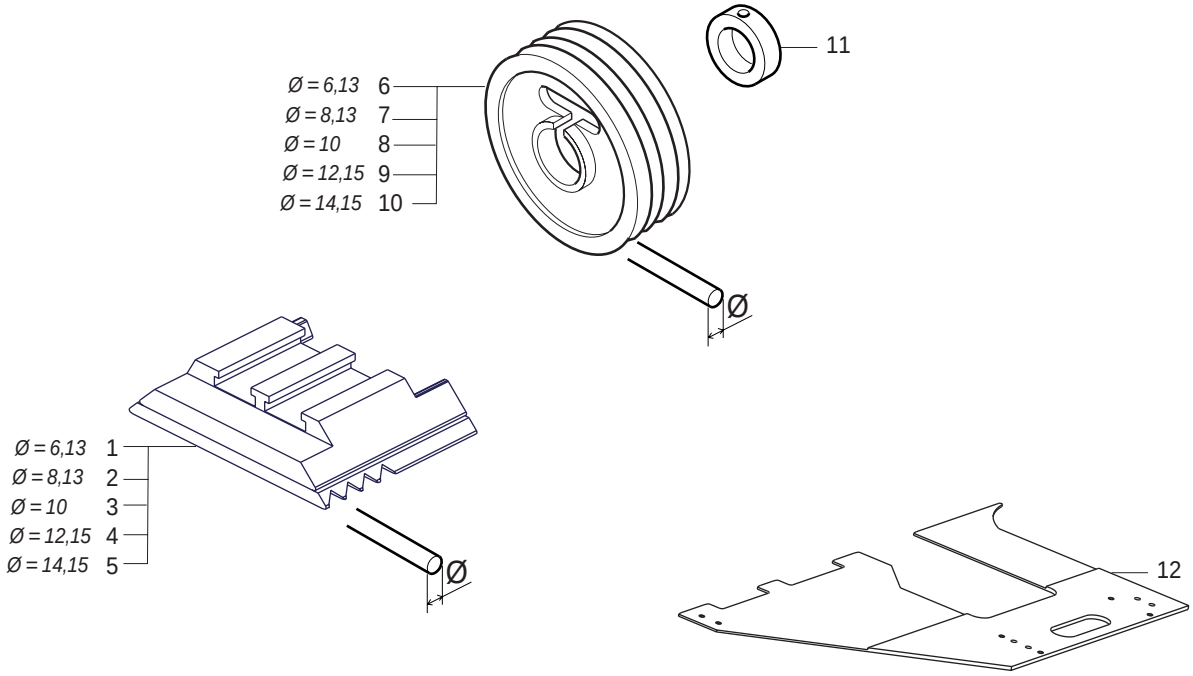

| scm | SUPERSET XL | GR. SPIGOLATORE - (p.20,06,2007)<br>CORNER CHAMFERING UNIT - GROUPE DE CHANFREINAGE DERRIERE ARBRE HO<br>FASEAGGREGAT - | 227-5203-0 |
|---|---|---|---|

| N | P | C | CODICE | Q.TY | DENOMINAZIONE | DESCRIPTION | DESIGNATION | BEZEICHNUNG | DENOMINACION |
|---|---|---|---|---|---|---|---|---|---|
| | 01.01.1901 -> 01.01.3000 | | | | Note: ----- | | | | |
| 1 | | | 0322732208B | 1.00 | LAMIERA | PLATE | TOLE | BLECH | CHAPA |
| 2 | | | 0322732213B | 1.00 | TARGA | RATING PLATE | PLAQUE | SCHILD | TARJETA |
| 3 | | | 0322732214D | 1.00 | CAMMA | CAM | CAME | NOCKEN | EXCENTRICO |
| 4 | | | 2722732212A | 1.00 | ASS. VALVOLE | VALVE UNIT | ENSEMBLE VALVES | VENTILE-EINHEIT | CONJ. VALVULAS |
| 5 | | | 0001500415H | 2.00 | VALVOLA | VALVE | SOUPAPE | VENTIL | VALVULA |
| 6 | | | 0001344098F | 1.00 | ELETTROVALVOLA V.110 | SOLENOID VALVE | ELECTROVALVE | MAGNETVENTIL | ELECTROVALVULA |
| 7 | | | 0001502498F | 2.00 | VALVOLA | VALVE | VALVE | VENTIL | VALV. |
| 8 | | | 0001503268L | 1.00 | CILINDRO PNEUMATICO | PNEUMATIC CYLINDER | CYLINDRE PNEUMATIQUE | PNEUMATIKZYLINDER | CILINDRO NEUMATICO |
| 9 | | | 0522732202C | 1.00 | SUPPORTO | SUPPORT | SUPPORT | STUETZE | SOPORTE |
| 10 | | | 0322732209D | 1.00 | GUIDA | GUIDE | GUIDE | FUEHRUNG | GUIA |
| 11 | | | 0322732206G | 1.00 | LAMIERA | PLATE | TOLE | BLECH | CHAPA |
| 12 | | | 0736223847L | 2.00 | GUIDA C/PATTINO SFERE | GUIDE WITH BALL BLOCK | GUIDE AVEC PATIN | FUEHRUNG MIT GLEITSCHUH | GUIA CON PATIN REC.ESF. |
| 13 | | | 0775190005F | 1.00 | MOTORE | MOTOR | MOTEUR | MOTOR | MOTOR |
| 14 | | | 0722765200C | 1.00 | FRESA | | | | |
| 15 | | | 0322732204C | 1.00 | SUPPORTO | SUPPORT | SUPPORT | STUETZE | SOPORTE |
| 16 | | | 0522732203E | 1.00 | CUFFIA | HOOD | HOTTE | HAUBE | CAMPANA |
| 17 | | | 2922780101H | 1.00 | GR.SPIGOLATORE | | | | |
| 18 | | | 0322732215F | 1.00 | TARGA | RATING PLATE | PLAQUE | SCHILD | TARJETA |
| 19 | | | 0322732205E | 1.00 | GOMMA | RUBBER | GOMME | GUMMI | GOMA |
| 20 | | | 0510130220F | 1.00 | BATTUTA | STOP | BUTEE | ANSCHLAG | TOPE |
| 21 | | | 0322732207L | 1.00 | LAMIERA | PLATE | TOLE | BLECH | CHAPA |
| 22 | | | 0522732201A | 1.00 | SUPPORTO | SUPPORT | SUPPORT | STUETZE | SOPORTE |

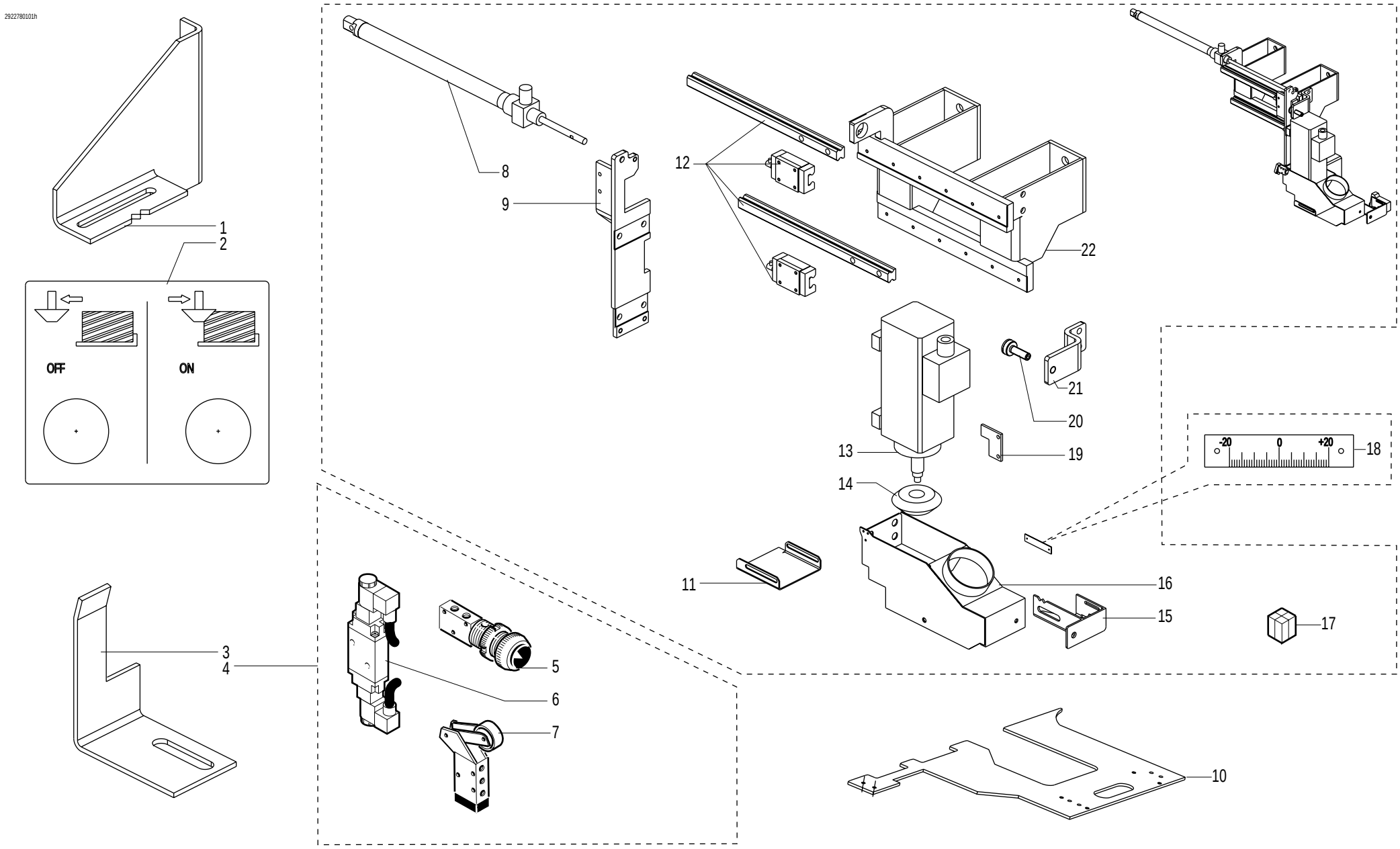


| scm | SUPERSET XL | GR. SPIGOLATORE - (01.01.1901 -> - p.20,06,2007)<br>CORNER CHAMFERING UNIT - GROUPE DE CHANFREINAGE DERRIERE ARBRE HO<br>FASEAGGREGAT - | 227-5203-0 |
|---|---|---|---|

| scm | SUPERSET XL | GR. SPIGOLATORE MANUALE - (p.20,06,2007)<br>CORNER CHAMFERING UNIT - GROUPE DE CHANFREINAGE DERRIERE ARBRE HO<br>FASEAGGREGAT - | 227-5204-0 |
|---|---|---|---|

| N | P | C | CODICE | Q.TY | DENOMINAZIONE | DESCRIPTION | DESIGNATION | BEZEICHNUNG | DENOMINACION |
|---|---|---|---|---|---|---|---|---|---|
| | 01.01.1901 -> 01.01.3000 | | | | Note: ----- | | | | |
| 1 | | | 0322732208B | 1.00 | LAMIERA | PLATE | TOLE | BLECH | CHAPA |
| 2 | | | 0322732213B | 1.00 | TARGA | RATING PLATE | PLAQUE | SCHILD | TARJETA |
| 3 | | | 0322732214D | 1.00 | CAMMA | CAM | CAME | NOCKEN | EXCENTRICO |
| 4 | | | 2722732211H | 1.00 | ASS. VALVOLE | VALVE UNIT | ENSEMBLE VALVES | VENTILE-EINHEIT | CONJ. VALVULAS |
| 5 | | | 0001500415H | 2.00 | VALVOLA | VALVE | SOUPAPE | VENTIL | VALVULA |
| 6 | | | 0001509131E | 1.00 | VALVOLA | VALVE | VALVE | VENTIL | VALV. |
| 7 | | | 0001502498F | 2.00 | VALVOLA | VALVE | VALVE | VENTIL | VALV. |
| 8 | | | 0001503268L | 1.00 | CILINDRO PNEUMATICO | PNEUMATIC CYLINDER | CYLINDRE PNEUMATIQUE | PNEUMATIKZYLINDER | CILINDRO NEUMATICO |
| 9 | | | 0522732202C | 1.00 | SUPPORTO | SUPPORT | SUPPORT | STUETZE | SOPORTE |
| 10 | | | 0322732209D | 1.00 | GUIDA | GUIDE | GUIDE | FUEHRUNG | GUIA |
| 11 | | | 0322732206G | 1.00 | LAMIERA | PLATE | TOLE | BLECH | CHAPA |
| 12 | | | 0736223847L | 2.00 | GUIDA C/PATTINO SFERE | GUIDE WITH BALL BLOCK | GUIDE AVEC PATIN | FUEHRUNG MIT GLEITSCHUH | GUIA CON PATIN REC.ESF. |
| 13 | | | 0775190005F | 1.00 | MOTORE | MOTOR | MOTEUR | MOTOR | MOTOR |
| 14 | | | 0722765200C | 1.00 | FRESA | | | | |
| 15 | | | 0322732204C | 1.00 | SUPPORTO | SUPPORT | SUPPORT | STUETZE | SOPORTE |
| 16 | | | 0522732203E | 1.00 | CUFFIA | HOOD | HOTTE | HAUBE | CAMPANA |
| 17 | | | 2922780101H | 1.00 | GR.SPIGOLATORE | | | | |
| 18 | | | 0322732215F | 1.00 | TARGA | RATING PLATE | PLAQUE | SCHILD | TARJETA |
| 19 | | | 0322732205E | 1.00 | GOMMA | RUBBER | GOMME | GUMMI | GOMA |
| 20 | | | 0510130220F | 1.00 | BATTUTA | STOP | BUTEE | ANSCHLAG | TOPE |
| 21 | | | 0322732207L | 1.00 | LAMIERA | PLATE | TOLE | BLECH | CHAPA |
| 22 | | | 0522732201A | 1.00 | SUPPORTO | SUPPORT | SUPPORT | STUETZE | SOPORTE |
| 23 | | | 0001508862E | 1.00 | VALVOLA | VALVE | VALVE | VENTIL | VALV. |
| 24 | | | 0001509714C | 4.00 | VALVOLA | VALVE | SOUPAPE | VENTIL | VALVULA |
| 25 | | | 0001509675L | 1.00 | VALVOLA | VALVE | SOUPAPE | VENTIL | VALVULA |
| 26 | | | 0322732224E | 1.00 | STELO | STEM | TIGE | SCHAFT | VASTAGO |
| 27 | | | 0000644256C | 1.00 | ANELLO SEEGER | CIRCLIP | CIRCLIP | SEEGERRING | SEEGER |
| 28 | | | 0322732223C | 1.00 | FLANGIA | FLANGE | FLASQUE | FLANSCH | BRIDA |
| 29 | | | 0322732225G | 1.00 | COPERTURA | COVER | COUVERCLE | DECKEL | CUBIERTA |
| 30 | | | 0322732226L | 1.00 | SUPPORTO | SUPPORT | SUPPORT | STUETZE | SOPORTE |

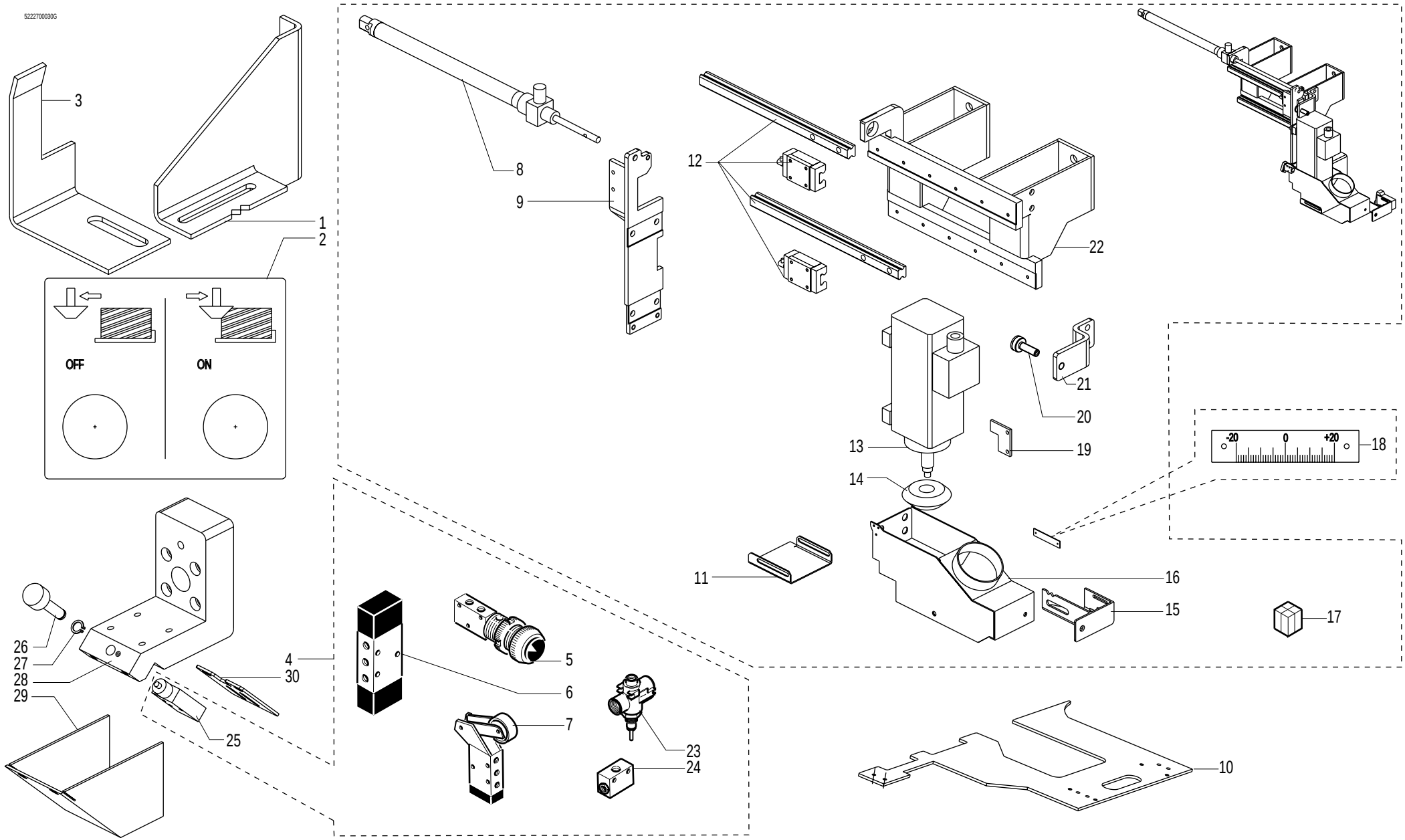


| | | | |
|---|---|---|---|
| scm | SUPERSET XL | GR. SPIGOLATORE MANUALE - (01.01.1901 -> - p.20,06,2007)<br>CORNER CHAMFERING UNIT - GROUPE DE CHANFREINAGE DERRIERE ARBRE HO<br>FASEAGGREGAT - | 227-5204-0 |

| scm | SUPERSET XL | BLOCCAGGIO RAPIDO - (p.20,06,2007)<br>SHAFT CLAMPING UNIT - GROUPE SERRAGE ARBRE<br>SPINDELBLOCKIERUNG - BLOQUED | 227-5205-0 |
|---|---|---|---|

| N | P | C | CODICE | Q.TY | DENOMINAZIONE | DESCRIPTION | DESIGNATION | BEZEICHNUNG | DENOMINACION |
|---|---|---|---|---|---|---|---|---|---|
| | 01.01.1901 -> 01.01.3000 | | | | Note: ----- | | | | |
| 1 | | | 0310830314L | 3.00 | BOCCOLA | BUSHING | DOUILLE | BUCHSE | CASQUILLO |
| 2 | | | 2711135400C | 3.00 | BLOCCAGGIO | LOCKING DEVICE | BLOCAGE | SPERRE | BLOQUEO |
| 2 | | | 2711135410D | 4.00 | BLOCCAGGIO | LOCKING DEVICE | BLOCAGE | SPERRE | BLOQUEO |
| 3 | | | 0001903002L | 1.00 | PISTOLA | PISTOL | PISTOLET | PISTOLE | PISTOLA |

5211190040h

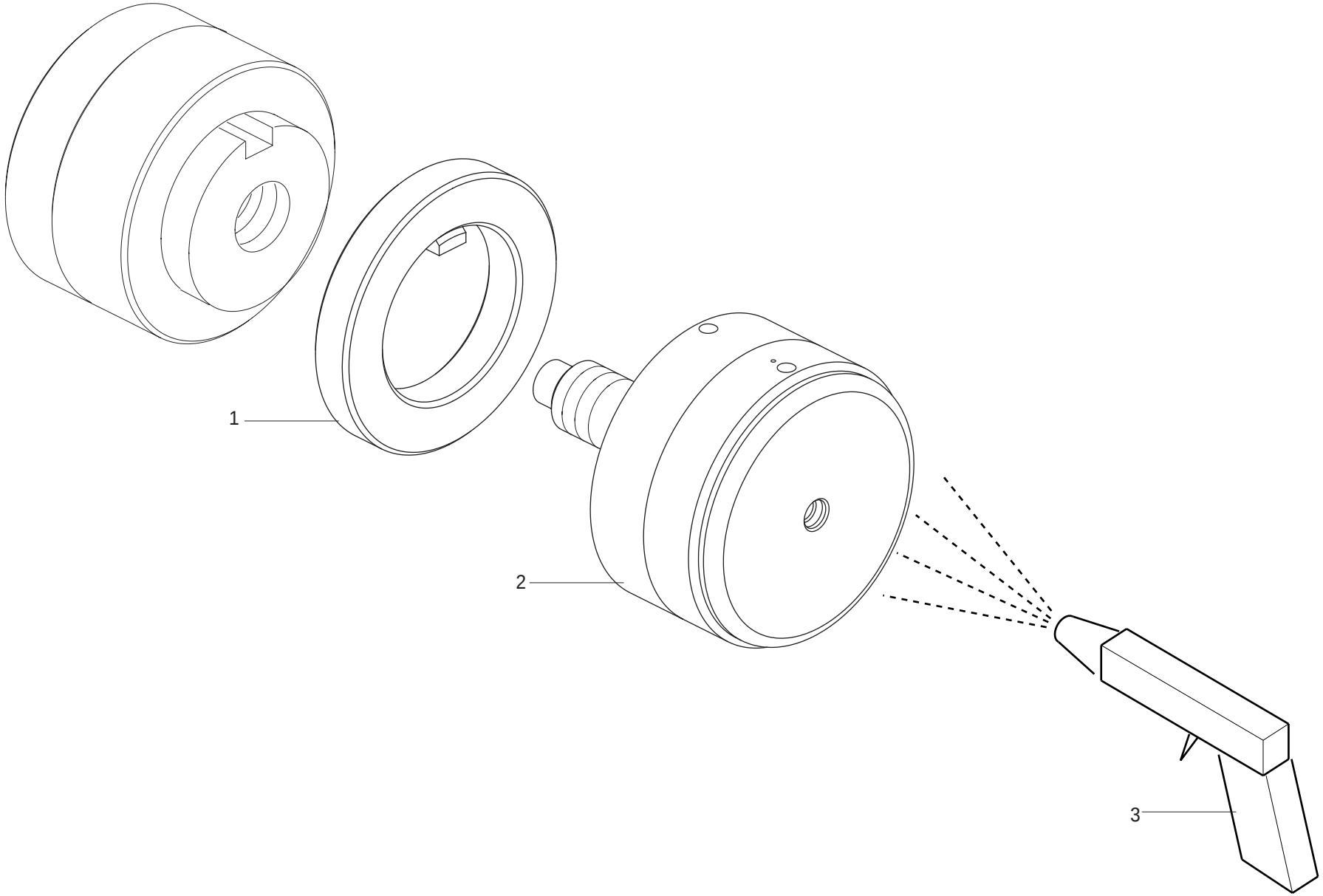


| scm | SUPERSET XL | BLOCCAGGIO RAPIDO - (01.01.1901 -> - p.20,06,2007)<br>SHAFT CLAMPING UNIT - GROUPE SERRAGE ARBRE<br>SPINDELBLOCKIERUNG - BLOQUED | 227-5205-0 |
|---|---|---|---|

| scm | SUPERSET XL | DOPPIO UNIVERSALE C/E.M. DX - SX - (p.20,06,2007)<br>-<br>- | 227-5206-0 |
|---|---|---|---|

| N | P | C | CODICE | Q.TY | DENOMINAZIONE | DESCRIPTION | DESIGNATION | BEZEICHNUNG | DENOMINACION |
|---|---|---|---|---|---|---|---|---|---|
| | 01.01.1901 -> 01.01.3000 | | | | Note: ----- | | | | |
| 1 | | | 0321990239H | 1.00 | PIATTO | PLATE | PLAT | PLATTE | PLATO |
| 2 | | | 0310170028D | 4.00 | VITE DI REGISTRO | SCREW | VIS REGLAGE | STELLSCHRAUBE | TORNILLO DE REGULACION |
| 3 | | | 0000301301C | 4.00 | DADO | NUT | ECROU | MUTTER | TUERCA |
| 4 | | | 0311190431E | 1.00 | SUPPORTO | SUPPORT | SUPPORT | STUETZE | SOPORTE |
| 4 | | | 0322760194E | 1.00 | SUPPORTO | SUPPORT | SUPPORT | STUETZE | SOPORTE |
| 5 | | | 0311190432G | 1.00 | GUIDA DX | GUIDE | GUIDE | FUEHRUNG | GUIA |
| 6 | | | 0311190434B | 1.00 | PIANO | TABLE | TABLE | TISCH | MESA |
| 7 | | | 0311190433L | 1.00 | PIANO | TABLE | TABLE | TISCH | MESA |
| 8 | | | 0322710117B | 2.00 | SPESSORE | SHIM | CALE | BEILAGE | ESPESOR |
| 9 | | | 0000301303G | 4.00 | DADO | NUT | ECROU | MUTTER | TUERCA |
| 10 | | | 0322720146E | 2.00 | PIASTRINA | PLATE | PLAQUE | PLATTE | PLANCHA |
| 11 | | | 0000304260H | 2.00 | VITE | SCREW | VIS | SCHRAUBE | TORNILLO |
| 12 | | | 0322710116L | 1.00 | SPESSORE | SHIM | CALE | BEILAGE | ESPESOR |
| 13 | | | 0000307341D | 1.00 | SPINA | PIN | CHEVILLE | STIFT | CLAVIJA |
| 14 | | | 0322720145C | 1.00 | PIANO | TABLE | TABLE | TISCH | MESA |
| 15 | | | 0311190436F | 1.00 | PIANO | TABLE | TABLE | TISCH | MESA |
| 16 | | | 0311190435D | 1.00 | PIANO | TABLE | TABLE | TISCH | MESA |
| 17 | | | 0511190430G | 1.00 | GUIDA | GUIDE | GUIDE | FUEHRUNG | GUIA |
| 17 | | | 0522760193G | 1.00 | GUIDA | GUIDE | GUIDE | FUEHRUNG | GUIA |
| 18 | | | 0000309307E | 2.00 | VITE | SCREW | VIS | SCHRAUBE | TORNILLO |
| 19 | | | 0321990235L | 1.00 | PIATTO | PLATE | PLAT | PLATTE | PLATO |
| 20 | | | 0321990237D | 1.00 | COLTELLO DIVISORE | RIVING KNIFE | COUTEAU DIVISEUR | SPALTKEIL | CUCHILLA DIVISORIA |
| 21 | | | 0321990238F | 1.00 | SUPPORTO | SUPPORT | SUPPORT | STUETZE | SOPORTE |
| 23 | | | 0001503387B | 1.00 | LUBRIFICATORE | LUBRICATOR | GRAISSEUR | SCHMIERBUECHSE | ACEITADOR |
| 24 | | | 0322720624L | 1.00 | PIANO | TABLE | TABLE | TISCH | MESA |
| 25 | | | 0322720626D | 1.00 | PIANO | TABLE | TABLE | TISCH | MESA |

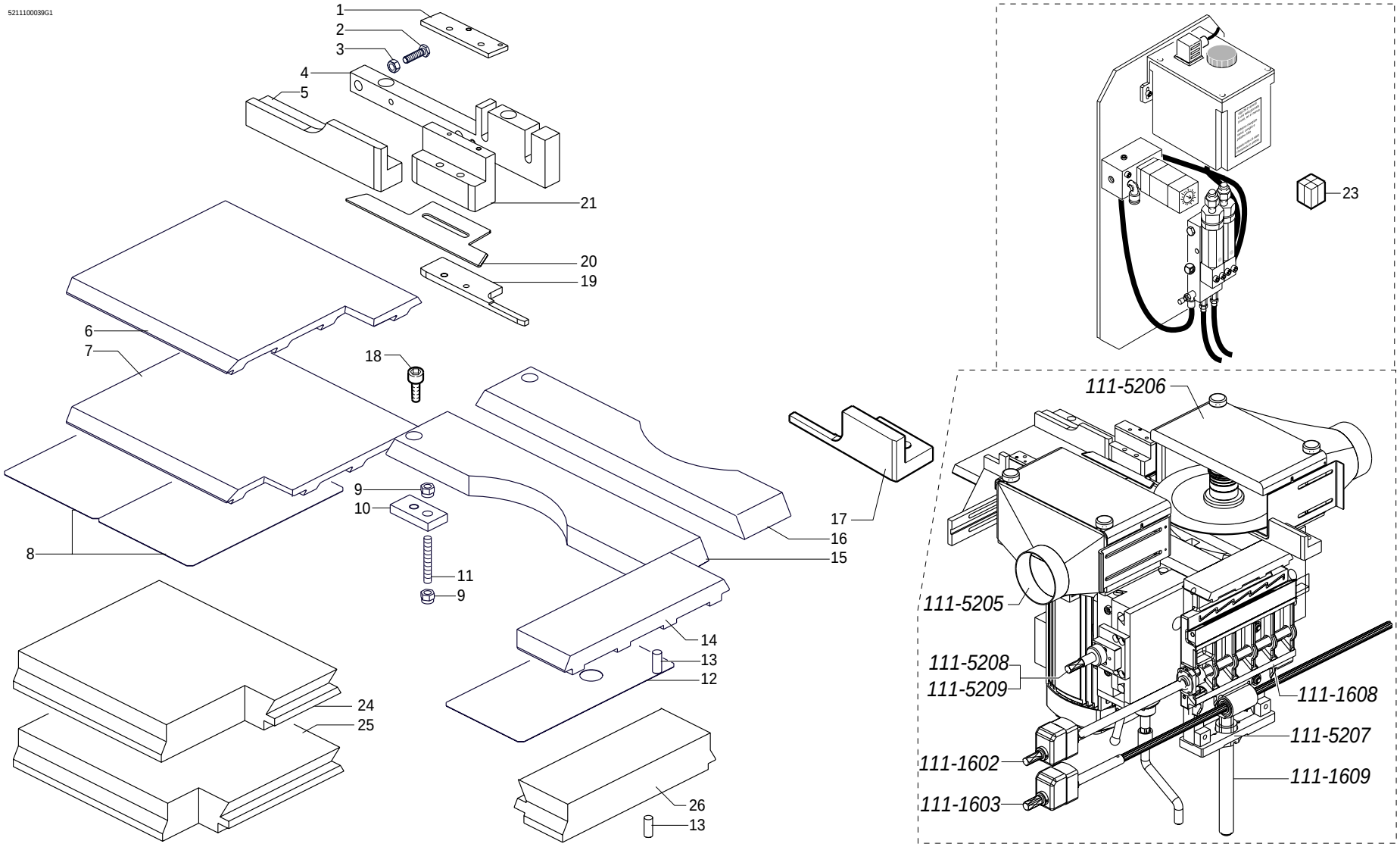


| | | | |
|---|---|---|---|
| scm | **SUPERSET XL** | **DOPPIO UNIVERSALE C/E.M. DX - SX - (01.01.1901 ->  - p.20,06,2007)**<br>-<br>- | **227-5206-0** |

| scm | SUPERSET XL | ELETTROMANDRINO SX LAME D=300 - (p.20,06,2007)<br>ELECTRIC SPINDLE - MANDRIN ELECTRIQUE<br>ELECTROSPINDEL - ELECTROMANDRIL | 227-5207-0 |
|---|---|---|---|

| N | P | C | CODICE | Q.TY | DENOMINAZIONE | DESCRIPTION | DESIGNATION | BEZEICHNUNG | DENOMINACION |
|---|---|---|---|---|---|---|---|---|---|
| | 01.01.1901 -> 01.01.3000 | | | | Note: ----- | | | | |
| 1 | | | 0319014002H | 2.00 | POMELLO | BALL GRIP | GRIFFE | KUGELGRIFF | POMO |
| 2 | | | 0511190429F | 0.00 | COPERCHIO | COVER | COUVERCLE | DECKEL | TAPA |
| 3 | | | 0511190427B | 1.00 | CUFFIA | HOOD | HOTTE | HAUBE | CAMPANA |
| 4 | | | 0321990252E | 1.00 | SCHERMO | GUARD | ECRAN | ABDECKUNG | PANTALLA |
| 5 | | | 0321990251C | 1.00 | QUADRO | BOARD | PANNEAU | TAFEL | CUADRO |
| 6 | | | 0311190418H | 1.00 | FLANGIA | FLANGE | FLASQUE | FLANSCH | BRIDA |
| 7 | | | 0321990244H | 1.00 | PRESSATORE | PRESSER | PRESSEUR | DRUCKELEMENT | PRENSADOR |
| 8 | | | 0710830024C | 1.00 | MOTORE TRIF. | 3.PH. MOTOR | 3 PH. MOTEUR | 3-DREIPHASENMOTOR | MOT. TRIFAS |
| 8 | | | 0710830070L | 1.00 | MOTORE TRIF. | 3.PH. MOTOR | 3 PH. MOTEUR | 3-DREIPHASENMOTOR | MOT. TRIFAS |
| 9 | | | 0310830802E | 1.00 | FLANGIA | FLANGE | FLASQUE | FLANSCH | BRIDA |
| 10 | | | 0321990203B | 2.00 | FLANGIA | FLANGE | FLASQUE | FLANSCH | BRIDA |
| 11 | | | 0310830320B | 1.00 | ANELLO H3 D=40 | RING | BAGUE | RING | ANILLO |
| 12 | | | 0310830332G | 1.00 | ANELLO H20 D=40 | RING | BAGUE | RING | ANILLO |
| 13 | | | 0310830331E | 1.00 | ANELLO H15 D=40 | RING | BAGUE | RING | ANILLO |
| 14 | | | 0310830318H | 2.00 | ANELLO H7 D=40 | RING | BAGUE | RING | ANILLO |
| 15 | | | 0310830319A | 1.00 | ANELLO H5 D=40 | RING | BAGUE | RING | ANILLO |
| 16 | | | 0321990241B | 1.00 | SUPPORTO | SUPPORT | SUPPORT | STUETZE | SOPORTE |
| 17 | | | 0000308566C | 1.00 | VITE | SCREW | VIS | SCHRAUBE | TORNILLO |
| 18 | | | 0327430300B | 1.00 | RONDELLA | WASHER | RONDELLE | SCHEIBE | ARANDELA |
| 19 | | | 0316036400C | 1.00 | ANELLO CON DENTATURA D=40 | RING | BAGUE | RING | ANILLO |
| 20 | | | 0321990240L | 1.00 | PIATTO | PLATE | PLAT | PLATTE | PLATO |
| 21 | | | 0521990242H | 1.00 | SUPPORTO | SUPPORT | SUPPORT | STUETZE | SOPORTE |
| 22 | | | 0321990243F | 1.00 | SUPPORTO | SUPPORT | SUPPORT | STUETZE | SOPORTE |
| 23 | | | 0321990237D | 1.00 | COLTELLO DIVISORE | RIVING KNIFE | COUTEAU DIVISEUR | SPALTKEIL | CUCHILLA DIVISORIA |
| 24 | | | 0321990236B | 1.00 | PIATTO | PLATE | PLAT | PLATTE | PLATO |
| 25 | | | 0310831300A | 1.00 | POMELLO | BALL GRIP | POIGNEE | KUGELGRIFF | POMO |
| 26 | | | 0310831201A | 1.00 | MOLLA | SPRING | RESSORT | FEDER | RESORTE |
| 27 | | | 0310871501F | 1.00 | BOCCOLA | BUSHING | DOUILLE | BUCHSE | CASQUILLO |
| 28 | | | 0310838300H | 1.00 | PERNO | PIN | PIVOT | BOLZEN | PERNO |
| 29 | | | 0310837401B | 1.00 | CUFFIA | HOOD | HOTTE | HAUBE | CAMPANA |

5211100041A

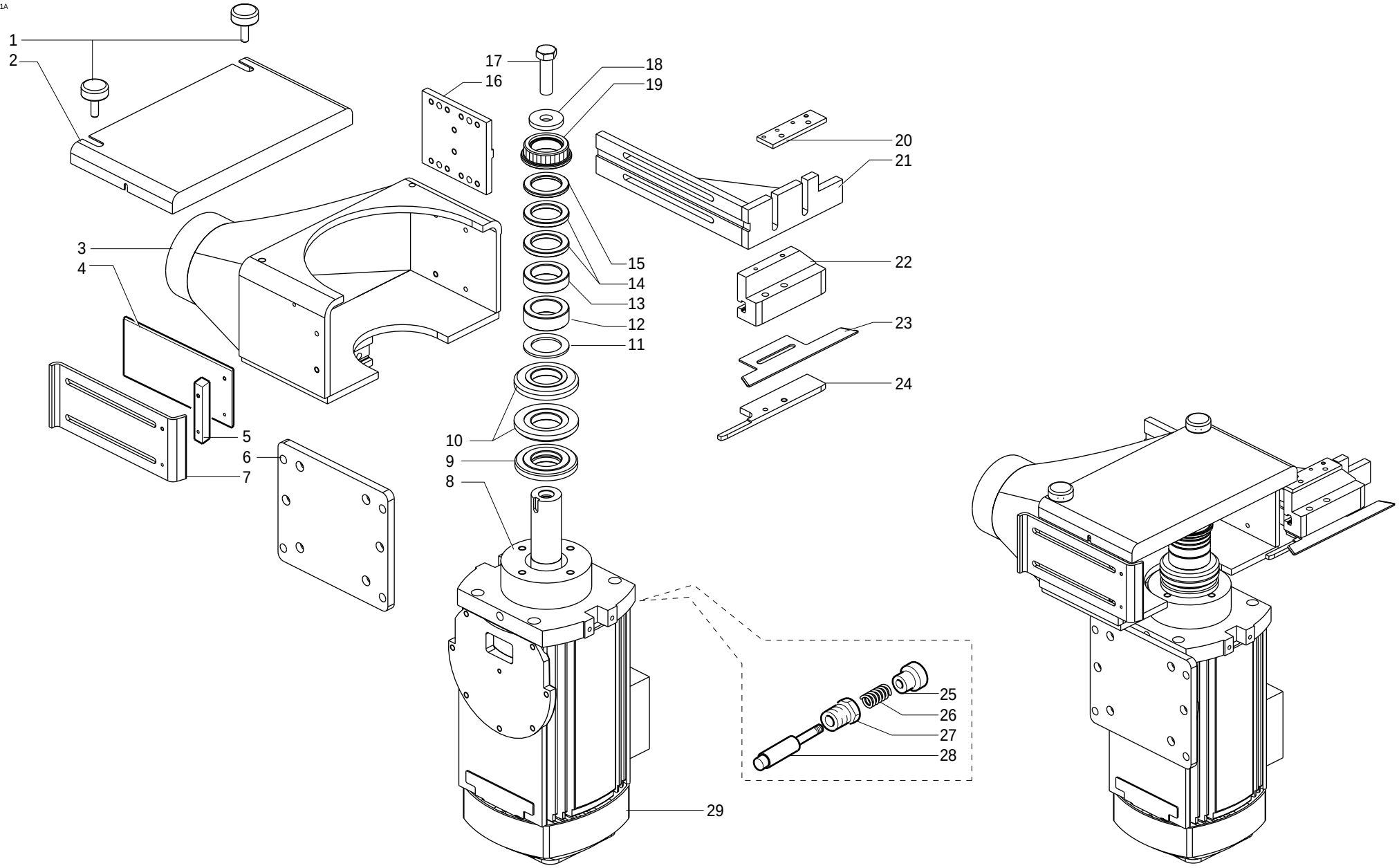


| | | | |
|---|---|---|---|
| scm | **SUPERSET XL** | **ELETTROMANDRINO SX LAME D=300 - (01.01.1901 -> - p.20,06,2007)**<br>**ELECTRIC SPINDLE - MANDRIN ELECTRIQUE**<br>**ELECTROSPINDEL - ELECTROMANDRIL** | **227-5207-0** |

| scm | SUPERSET XL | ELETTROMANDRINO DX LAME D=300 - (p.20,06,2007)<br>ELECTRIC SPINDLE - MANDRIN ELECTRIQUE<br>ELECTROSPINDEL - ELECTROMANDRIL | 227-5208-0 |
|---|---|---|---|

| N | P | C | CODICE | Q.TY | DENOMINAZIONE | DESCRIPTION | DESIGNATION | BEZEICHNUNG | DENOMINACION |
|---|---|---|---|---|---|---|---|---|---|
| | 01.01.1901 -> 01.01.3000 | | | | Note: ----- | | | | |
| 1 | | | 0000308566C | 1.00 | VITE | SCREW | VIS | SCHRAUBE | TORNILLO |
| 2 | | | 0327430300B | 1.00 | RONDELLA | WASHER | RONDELLE | SCHEIBE | ARANDELA |
| 3 | | | 0316036400C | 1.00 | ANELLO CON DENTATURA D=40 | RING | BAGUE | RING | ANILLO |
| 4 | | | 0310830319A | 2.00 | ANELLO H5 D=40 | RING | BAGUE | RING | ANILLO |
| 5 | | | 0310830332G | 1.00 | ANELLO H20 D=40 | RING | BAGUE | RING | ANILLO |
| 6 | | | 0310830318H | 1.00 | ANELLO H7 D=40 | RING | BAGUE | RING | ANILLO |
| 7 | | | 0310830331E | 1.00 | ANELLO H15 D=40 | RING | BAGUE | RING | ANILLO |
| 8 | | | 0310830320B | 1.00 | ANELLO H3 D=40 | RING | BAGUE | RING | ANILLO |
| 9 | | | 0321990203B | 2.00 | FLANGIA | FLANGE | FLASQUE | FLANSCH | BRIDA |
| 10 | | | 0310830802E | 1.00 | FLANGIA | FLANGE | FLASQUE | FLANSCH | BRIDA |
| 11 | | | 0311190418H | 1.00 | FLANGIA | FLANGE | FLASQUE | FLANSCH | BRIDA |
| 12 | | | 0710830024C | 1.00 | MOTORE TRIF. | 3.PH. MOTOR | 3 PH. MOTEUR | 3-DREIPHASENMOTOR | MOT. TRIFAS |
| 12 | | | 0710830070L | 1.00 | MOTORE TRIF. | 3.PH. MOTOR | 3 PH. MOTEUR | 3-DREIPHASENMOTOR | MOT. TRIFAS |
| 13 | | | 0319014002H | 2.00 | POMELLO | BALL GRIP | GRIFFE | KUGELGRIFF | POMO |
| 14 | | | 0511190429F | 1.00 | COPERCHIO | COVER | COUVERCLE | DECKEL | TAPA |
| 15 | | | 0321990245A | 2.00 | SCHERMO | GUARD | ECRAN | ABDECKUNG | PANTALLA |
| 16 | | | 0511190428D | 1.00 | CUFFIA | HOOD | HOTTE | HAUBE | CAMPANA |
| 17 | | | 0310831300A | 1.00 | POMELLO | BALL GRIP | POIGNEE | KUGELGRIFF | POMO |
| 18 | | | 0310831201A | 1.00 | MOLLA | SPRING | RESSORT | FEDER | RESORTE |
| 19 | | | 0310871501F | 1.00 | BOCCOLA | BUSHING | DOUILLE | BUCHSE | CASQUILLO |
| 20 | | | 0310838300H | 1.00 | PERNO | PIN | PIVOT | BOLZEN | PERNO |
| 21 | | | 0310837401B | 1.00 | CUFFIA | HOOD | HOTTE | HAUBE | CAMPANA |

5211100042C

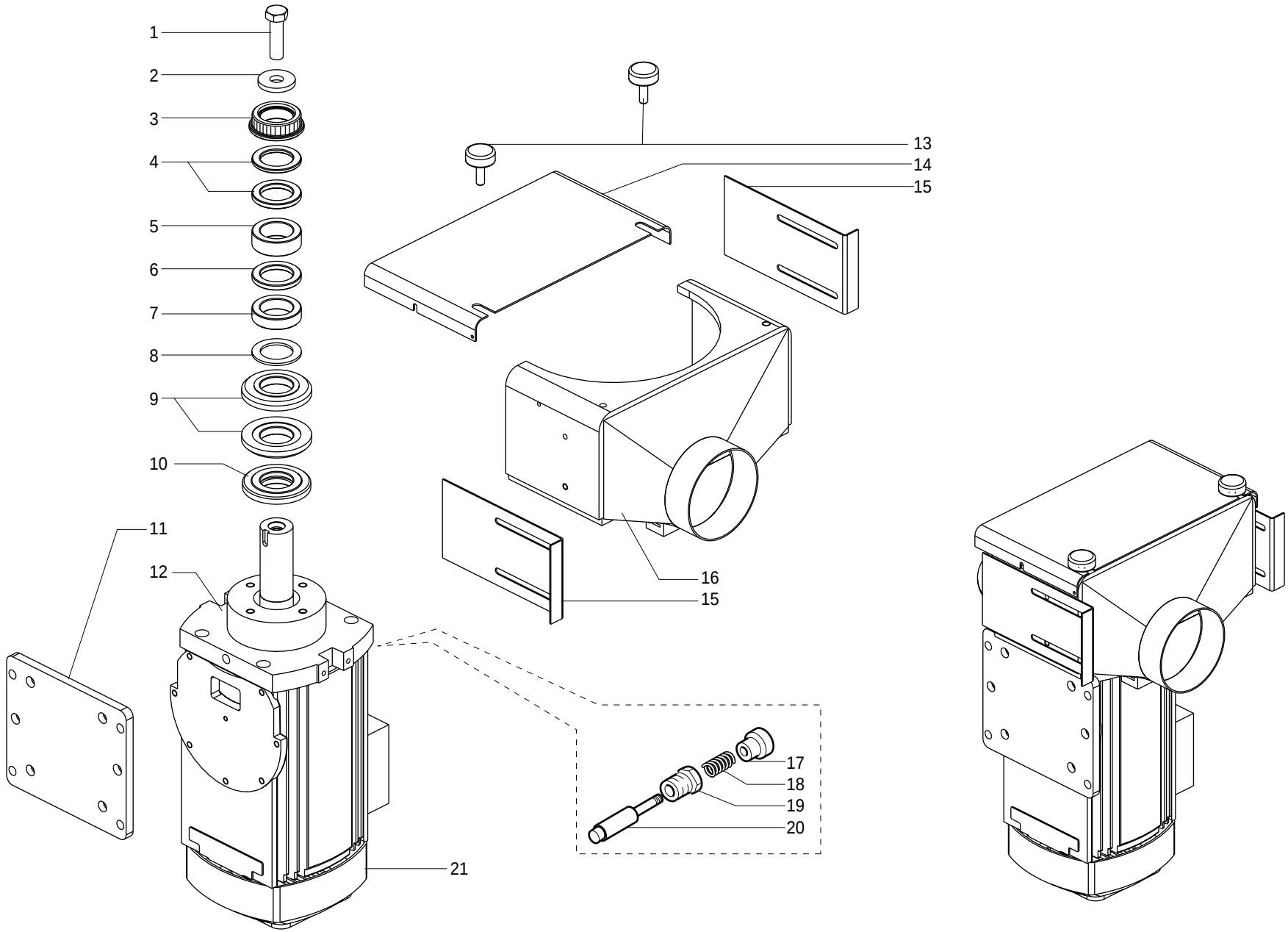


| | | | |
|---|---|---|---|
| scm | SUPERSET XL | ELETTROMANDRINO DX LAME D=300 - (01.01.1901 -> - p.20,06,2007)<br>ELECTRIC SPINDLE - MANDRIN ELECTRIQUE<br>ELECTROSPINDEL - ELECTROMANDRIL | 227-5208-0 |

| scm | SUPERSET XL | SLITTA A CROCE X E.M. DX-SX - (p.20,06,2007)<br>SLIDE - GLISSIERE<br>SCHLITTEN - TRINEO | 227-5209-0 |
|---|---|---|---|

| N | P | C | CODICE | Q.TY | DENOMINAZIONE | DESCRIPTION | DESIGNATION | BEZEICHNUNG | DENOMINACION |
|---|---|---|---|---|---|---|---|---|---|
| | 01.01.1901 -> 01.01.3000 | | | | Note: ----- | | | | |
| 1 | | | 0316330019B | 1.00 | POMELLO | BALL GRIP | POIGNEE | KUGELGRIFF | POMO |
| 2 | | | 0319434140L | 1.00 | FLANGIA | FLANGE | FLASQUE | FLANSCH | BRIDA |
| 3 | | | 0311190423H | 1.00 | PIATTO | PLATE | PLAT | PLATTE | PLATO |
| 4 | | | 0000613041H | 2.00 | GABBIA A RULLINI | ROLLER CAGE | CAGE A ROULEAUX | WALZENKAEFIG | COJINETE |
| 5 | | | 0316330020C | 1.00 | RONDELLA | WASHER | RONDELLE | SCHEIBE | ARANDELA |
| 6 | | | 0000613045G | 4.00 | RALLA | WASHER | CRAPAUDINE | SCHEIBE | RANGUA |
| 7 | | | 0319434106H | 1.00 | VITE | SCREW | VIS | SCHRAUBE | TORNILLO |
| 8 | | | 0511190419E | 1.00 | SLITTA | SLIDE | COULISSE | SCHLITTEN | CORREDERA |
| 9 | | | 0511190420F | 1.00 | FLANGIA | FLANGE | FLASQUE | FLANSCH | BRIDA |
| 10 | | | 0322790306A | 1.00 | MADREVITE | NUT SCREW | VIS-MERE | MUTTERGEWINDE | TUERCA |

5211100043E

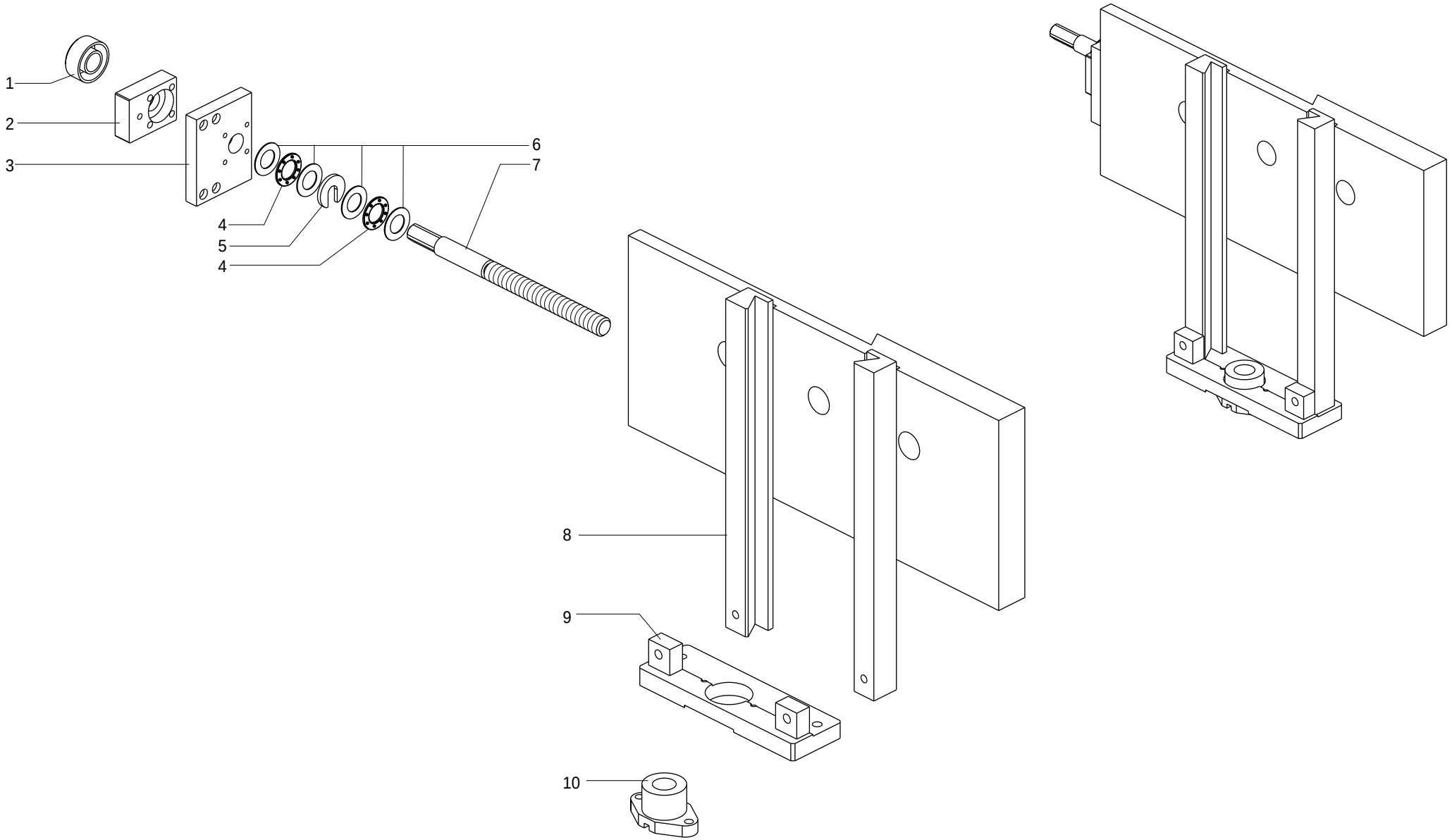


| | | | |
|---|---|---|---|
| scm | SUPERSET XL | SLITTA A CROCE X E.M. DX-SX - (01.01.1901 -> - p.20,06,2007)<br>SLIDE - GLISSIERE<br>SCHLITTEN - TRINEO | 227-5209-0 |

| scm | SUPERSET XL | SLITTA A CROCE X E.M. SX - (p.20,06,2007)<br>SLIDE - GLISSIERE<br>SCHLITTEN - TRINEO | 227-5210-0 |
|---|---|---|---|

| N | P | C | CODICE | Q.TY | DENOMINAZIONE | DESCRIPTION | DESIGNATION | BEZEICHNUNG | DENOMINACION |
|---|---|---|---|---|---|---|---|---|---|
| | 01.01.1901 -> 01.01.3000 | | | | Note: ----- | | | | |
| | 1 | | 0311190421D | 1.00 | SLITTA | SLIDE | COULISSE | SCHLITTEN | CORREDERA |
| | 2 | | 0311190425C | 1.00 | LARDONE | GIB | CONTRE-FER | STELLEISTE | CHAVETA |
| | 3 | | 0000302305C | 3.00 | VITE | SCREW | VIS | SCHRAUBE | TORNILLO |
| | 4 | | 0000301361L | 3.00 | DADO | NUT | ECROU | MUTTER | TUERCA |

5211100044G

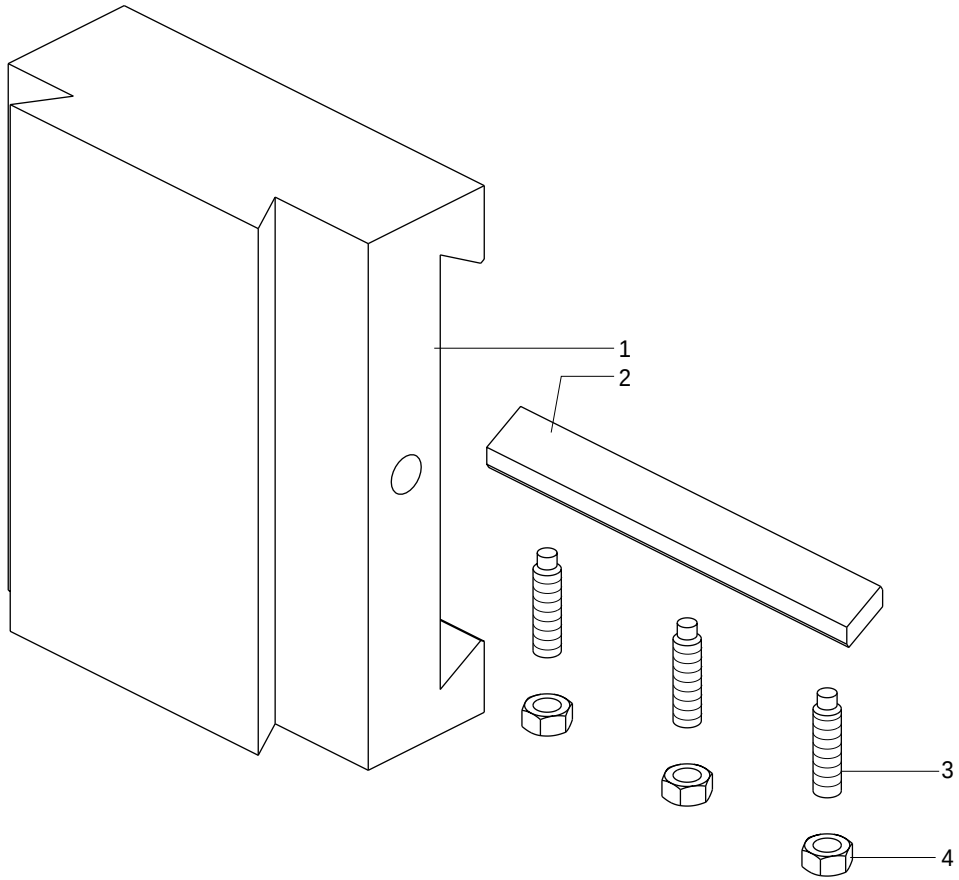


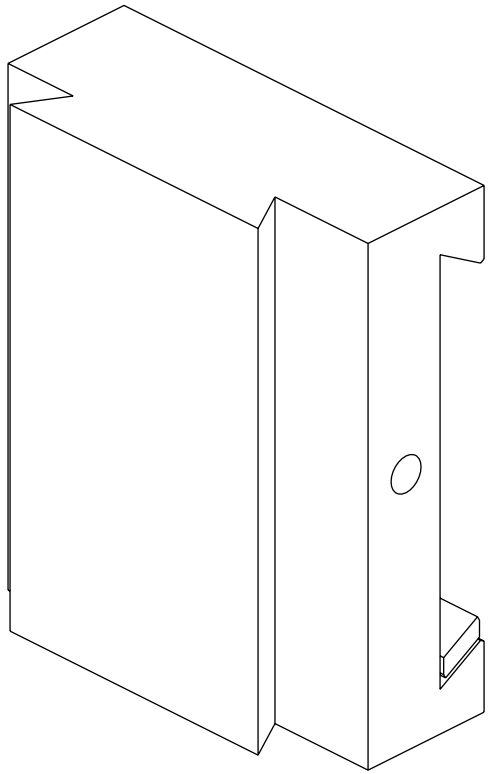

| | | | |
|---|---|---|---|
| scm | **SUPERSET XL** | **SLITTA A CROCE X E.M. SX - (01.01.1901 ->  - p.20,06,2007)**<br>**SLIDE - GLISSIERE**<br>**SCHLITTEN - TRINEO** | **227-5210-0** |

| scm | SUPERSET XL | SLITTA VERTICALE X E.M. SX - (p.20,06,2007)<br>VERTICAL SLIDE - GLISSIERE VERTICALE<br>VERTIKALSCHLITTEN - TRINEO VERTICAL | 227-5211-0 |
|---|---|---|---|

| N | P | C | CODICE | Q.TY | DENOMINAZIONE | DESCRIPTION | DESIGNATION | BEZEICHNUNG | DENOMINACION |
|---|---|---|---|---|---|---|---|---|---|
| | 01.01.1901 -> 01.01.3000 | | | | Note: ----- | | | | |
| | 1 | | 0321990209E | 1.00 | VITE | SCREW | VIS | SCHRAUBE | TORNILLO |
| | 2 | | 0000613045G | 4.00 | RALLA | WASHER | CRAPAUDINE | SCHEIBE | RANGUA |
| | 3 | | 0000613041H | 2.00 | GABBIA A RULLINI | ROLLER CAGE | CAGE A ROULEAUX | WALZENKAEFIG | COJINETE |
| | 4 | | 0316330020C | 1.00 | RONDELLA | WASHER | RONDELLE | SCHEIBE | ARANDELA |
| | 5 | | 0321930017D | 1.00 | ANELLO | RING | BAGUE | RING | ANILLO |
| | 6 | | 0311190424A | 1.00 | PIATTO | PLATE | PLAT | PLATTE | PLATO |
| | 7 | | 0321930016B | 1.00 | SUPPORTO | SUPPORT | SUPPORT | STUETZE | SOPORTE |
| | 8 | | 0316330019B | 1.00 | POMELLO | BALL GRIP | POIGNEE | KUGELGRIFF | POMO |
| | 9 | | 0719412601A | 1.00 | MANIGLIA | HANDLE | POIGNEE | HANDGRIFF | MANIJA |
| | 10 | | 0000304246L | 1.00 | VITE | SCREW | VIS | SCHRAUBE | TORNILLO |
| | 11 | | 0311190422F | 1.00 | SLITTA | SLIDE | COULISSE | SCHLITTEN | CORREDERA |
| | 12 | | 0311190426E | 1.00 | LARDONE | GIB | CONTRE-FER | STELLEISTE | CHAVETA |
| | 13 | | 0000302305C | 3.00 | VITE | SCREW | VIS | SCHRAUBE | TORNILLO |
| | 14 | | 0000301361L | 3.00 | DADO | NUT | ECROU | MUTTER | TUERCA |

5211100045L

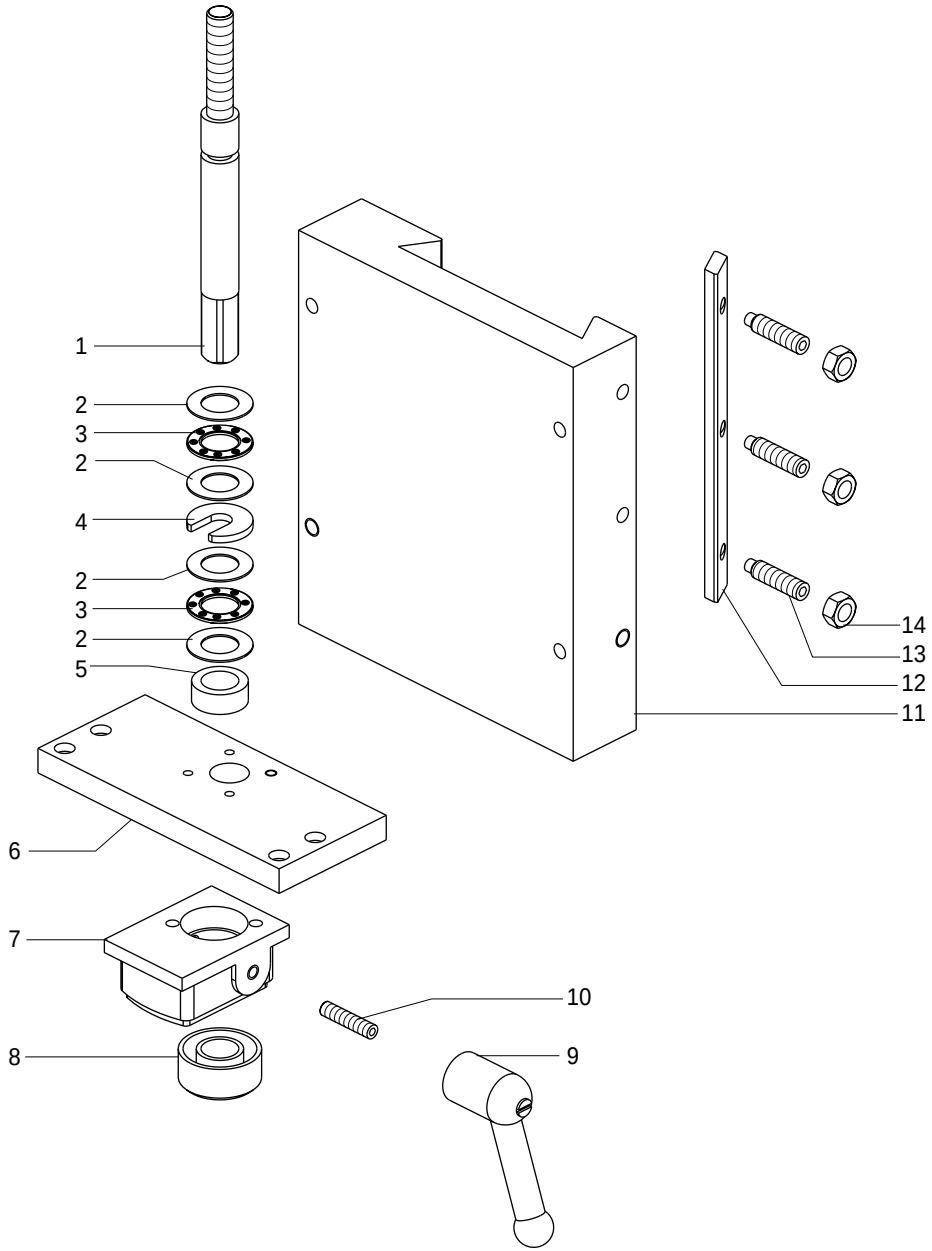


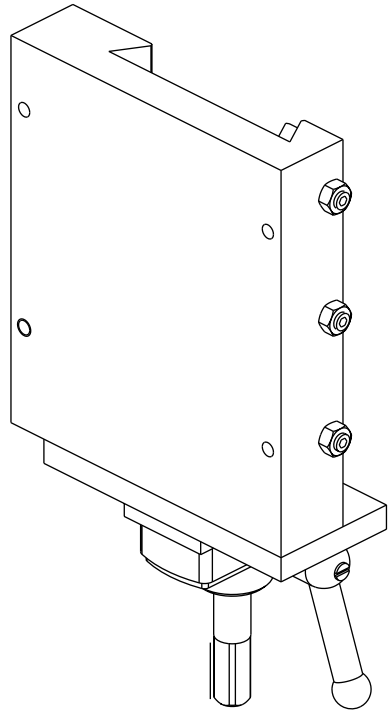

| | | | |
|---|---|---|---|
| scm | SUPERSET XL | SLITTA VERTICALE X E.M. SX - (01.01.1901 -> - p.20,06,2007)<br>VERTICAL SLIDE - GLISSIERE VERTICALE<br>VERTIKALSCHLITTEN - TRINEO VERTICAL | 227-5211-0 |

| scm | SUPERSET XL | GR.TTL INTEGRATO C/CONTROL.A MICROPROCES - (p.20,06,2007)<br>-<br>- | 227-5212-0 |
|---|---|---|---|

| N | P | C | CODICE | Q.TY | DENOMINAZIONE | DESCRIPTION | DESIGNATION | BEZEICHNUNG | DENOMINACION |
|---|---|---|---|---|---|---|---|---|---|
| | 01.01.1901 -> 01.01.3000 | | | | Note: ----- | | | | |
| | 1 | | 0719412602C | 1.00 | MANIGLIA | HANDLE | POIGNEE | HANDGRIFF | MANIJA |
| | 2 | | 0000304489E | 1.00 | VITE | SCREW | VIS | SCHRAUBE | TORNILLO |
| | 3 | | 0310140110A | 1.00 | PERNO | PIN | PIVOT | BOLZEN | PERNO |
| | 4 | | 0321940807C | 1.00 | PERNO | PIN | PIVOT | BOLZEN | PERNO |
| | 5 | | 0000301429E | 1.00 | GHIERA | RING NUT | EMBOUT | NUTMUTTER | COLLAR |
| | 6 | | 0321940801L | 1.00 | TESTATA | HEAD | TETE | KOPF | CABEZAL |
| | 7 | | 0321940804F | 1.00 | ROSETTA | WASHER | RONDELLE | SCHEIBE | ARANDELA |
| | 8 | | 0721940808D | 1.00 | CILINDRO PNEUMATICO | PNEUMATIC CYLINDER | CYLINDRE PNEUMATIQUE | PNEUMATIKZYLINDER | CILINDRO NEUMATICO |
| | 9 | | 0311131401L | 1.00 | SUPPORTO | SUPPORT | SUPPORT | STUETZE | SOPORTE |
| | 10 | | 0000644074F | 1.00 | ANELLO | RING | BAGUE | RING | ANILLO |
| | 11 | | 0000606205H | 2.00 | CUSCINETTO | BEARING | ROULEMENT | LAGER | COJINETE |
| | 12 | | 0321930456E | 1.00 | ANELLO | RING | BAGUE | RING | ANILLO |
| | 13 | | 0311131402B | 1.00 | STAFFA | BRACKET | BRIDE | BUEGEL | ABRAZADERA |
| | 14 | | 0001308592L | 1.00 | FINECORSA | LIMIT SWITCH | FIN DE COURSE | ENDSCHALTER | FIN CARRERA |
| | 15 | | 0000304307L | 1.00 | GRANO | DOWEL | VIS SIX PANS CREUX | DUEBEL | PASADOR |
| | 16 | | 0000304302H | 1.00 | VITE | SCREW | VIS | SCHRAUBE | TORNILLO |
| | 17 | | 0511131403H | 1.00 | BANDELLA | GUARD | PROTECTION | SCHUTZ | BANDA |
| | 18 | | 0000301363D | 1.00 | DADO | NUT | ECROU | MUTTER | TUERCA |
| | 19 | | 0000644292H | 1.00 | ANELLO RASCHIATORE | SCRAPING RING | BAGUE DE RACLAGE | ABSTREIFRING | ANILLO RASCADOR |
| | 20 | | 0321940806A | 1.00 | PERNO | PIN | PIVOT | BOLZEN | PERNO |
| | 21 | | 0000309369F | 1.00 | VITE | SCREW | VIS | SCHRAUBE | TORNILLO |
| | 22 | | 0319016123G | 1.00 | POMOLO | BALL GRIP | POIGNEE | KUGELGRIFF | POMO |
| | 23 | | 0316332636C | 1.00 | PASTIGLIA | PAD | PASTILLE | BELAG | PASTILLA |
| | 24 | | 0000301559A | 1.00 | GHIERA | RING NUT | EMBOUT | NUTMUTTER | COLLAR |
| | 25 | | 0321940802B | 1.00 | BIELLA | CONNECTING ROD | BIELLE | PLEUELSTANGE | BIELA |
| | 26 | | 0321940805H | 1.00 | PERNO | PIN | PIVOT | BOLZEN | PERNO |
| | 27 | | 0510140009B | 1.00 | SUPPORTO | SUPPORT | SUPPORT | STUETZE | SOPORTE |
| | 28 | | 0311131407C | 1.00 | CARTER | COVER | CARTER | DECKEL | CARTER |
| | 29 | | 0001308846L | 1.00 | FINECORSA PER CILINDRO | LIMIT SWITCH | FIN DE COURSE | ENDSCHALTER | FIN CARRERA |
| | 30 | | 0001500316H | 1.00 | SUPPORTO | SUPPORT | SUPPORT | STUETZE | SOPORTE |
| | 31 | | 0001502999L | 1.00 | CILINDRO PNEUMATICO | PNEUMATIC CYLINDER | CYLINDRE PNEUMATIQUE | PNEUMATIKZYLINDER | CILINDRO NEUMATICO |
| | 32 | | 0311131406A | 1.00 | LAMIERA | PLATE | TOLE | BLECH | CHAPA |
| | 33 | | 0000309224H | 1.00 | VITE | SCREW | VIS | SCHRAUBE | TORNILLO |
| | 34 | | 0311131409G | 1.00 | DISTANZIALE | SPACER | ENTRETOISE | DISTANZSTUECK | DISTANCIADOR |
| | 35 | | 0511131408L | 1.00 | SUPPORTO | SUPPORT | SUPPORT | STUETZE | SOPORTE |
| | 36 | | 0000309181F | 4.00 | VITE | SCREW | VIS | SCHRAUBE | TORNILLO |
| | 37 | | 0000305181B | 4.00 | ROSETTA | WASHER | RONDELLE | SCHEIBE | ARANDELA |
| | 38 | | 0000301301C | 1.00 | DADO | NUT | ECROU | MUTTER | TUERCA |
| | 39 | | 0000304245G | 1.00 | VITE | SCREW | VIS | SCHRAUBE | TORNILLO |

| N | P | C | CODICE | Q.TY | DENOMINAZIONE | DESCRIPTION | DESIGNATION | BEZEICHNUNG | DENOMINACION |
|---|---|---|---|---|---|---|---|---|---|
| | 40 | | 0000309145A | 3.00 | VITE | SCREW | VIS | SCHRAUBE | TORNILLO |
| | 41 | | 0338435338B | 1.00 | SUPPORTO | SUPPORT | SUPPORT | STUETZE | SOPORTE |
| | 42 | | 0739715095E | 1.00 | GUIDA | GUIDE | GUIDE | FUEHRUNG | GUIA |
| | 43 | | 0000305121E | 4.00 | ROSETTA | WASHER | RONDELLE | SCHEIBE | ARANDELA |
| | 44 | | 0000309123D | 4.00 | VITE | SCREW | VIS | SCHRAUBE | TORNILLO |
| | 45 | | 0001340606A | 1.00 | MODULO DI TRASLAZ. | | | | |
| | 46 | | 0311131410H | 1.00 | PIASTRA | PLATE | PLAQUE | PLATTE | PLANCHA |
| | 47 | | 0311131405H | 1.00 | PERNO | PIN | PIVOT | BOLZEN | PERNO |
| | 48 | | 0000606040G | 1.00 | CUSCINETTO | BEARING | ROULEMENT | LAGER | COJINETE |
| | 49 | | 0319461228A | 1.00 | RUOTA | WHEEL | ROUE | RAD | RUEDA |
| | 50 | | 0001340607C | 1.00 | BANDELLA MAGNETICA | GUARD | PROTECTION | SCHUTZ | BANDA |
| | 51 | | 0311131404F | 1.00 | ATTACCO | CONNECTING ROD | BARRE FIXATION | STAB | CONEXION |
| | 52 | | 0001344082B | 1.00 | ELETTROVALVOLA V.110 | SOLENOID VALVE | ELECTROVALVE | MAGNETVENTIL | ELECTROVALVULA |
| | 53 | | 0311131411A | 1.00 | CAMMA | CAM | CAME | NOCKEN | EXCENTRICO |
| | 54 | | 0001308592L | 1.00 | FINECORSA | LIMIT SWITCH | FIN DE COURSE | ENDSCHALTER | FIN CARRERA |
| | 55 | | 0001508862E | 2.00 | VALVOLA | VALVE | VALVE | VENTIL | VALV. |
| | 56 | | 0001508824E | 2.00 | VALVOLA REGOLATRICE | VALVE | SOUPAPE DE REGLAGE | EINSTELLVENTIL | VALVULA REGULADORA |

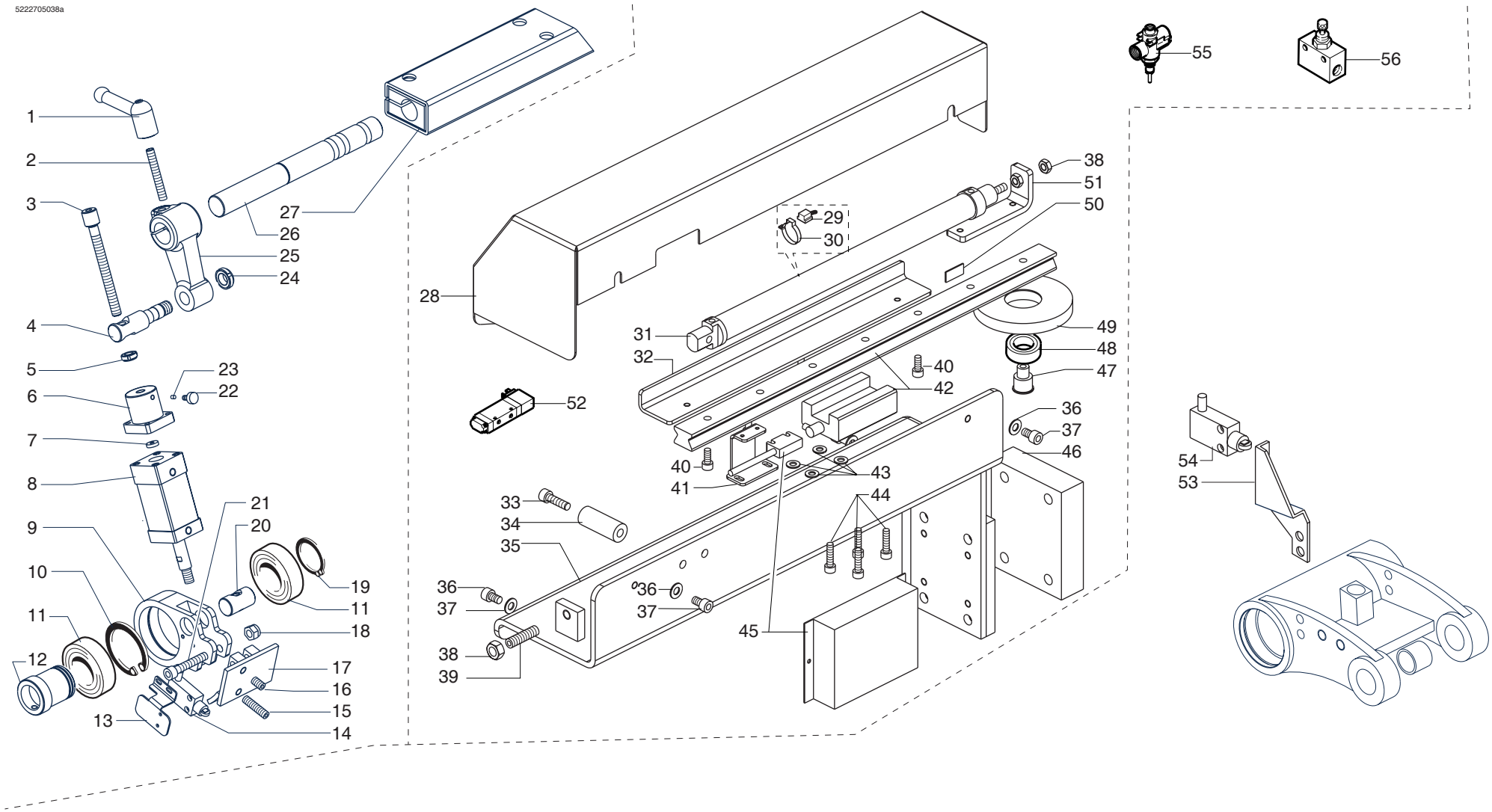


| scm | SUPERSET XL | GR.TTL INTEGRATO C/CONTROL.A MICROPROCES - (01.01.1901 -> - p.20,06,2007)<br>-<br>- | 227-5212-0 |
|---|---|---|---|

| scm | SUPERSET XL | GR.TTL INTEGRATO C/CONTROL.A MICROPROCES - (p.20,06,2007)<br>-<br>- | 227-5213-0 |
|---|---|---|---|

| N | P | C | CODICE | Q.TY | DENOMINAZIONE | DESCRIPTION | DESIGNATION | BEZEICHNUNG | DENOMINACION |
|---|---|---|---|---|---|---|---|---|---|
| | 01.01.1901 -> 01.01.3000 | | | | Note: ----- | | | | |
| | 1 | | 0719412602C | 1.00 | MANIGLIA | HANDLE | POIGNEE | HANDGRIFF | MANIJA |
| | 2 | | 0000304489E | 1.00 | VITE | SCREW | VIS | SCHRAUBE | TORNILLO |
| | 3 | | 0310140110A | 1.00 | PERNO | PIN | PIVOT | BOLZEN | PERNO |
| | 4 | | 0321940807C | 1.00 | PERNO | PIN | PIVOT | BOLZEN | PERNO |
| | 5 | | 0000301429E | 1.00 | GHIERA | RING NUT | EMBOUT | NUTMUTTER | COLLAR |
| | 6 | | 0321940801L | 1.00 | TESTATA | HEAD | TETE | KOPF | CABEZAL |
| | 7 | | 0321940804F | 1.00 | ROSETTA | WASHER | RONDELLE | SCHEIBE | ARANDELA |
| | 8 | | 0721940808D | 1.00 | CILINDRO PNEUMATICO | PNEUMATIC CYLINDER | CYLINDRE PNEUMATIQUE | PNEUMATIKZYLINDER | CILINDRO NEUMATICO |
| | 9 | | 0311131401L | 1.00 | SUPPORTO | SUPPORT | SUPPORT | STUETZE | SOPORTE |
| | 10 | | 0000644074F | 1.00 | ANELLO | RING | BAGUE | RING | ANILLO |
| | 11 | | 0000606205H | 2.00 | CUSCINETTO | BEARING | ROULEMENT | LAGER | COJINETE |
| | 12 | | 0321930456E | 1.00 | ANELLO | RING | BAGUE | RING | ANILLO |
| | 13 | | 0311131402B | 1.00 | STAFFA | BRACKET | BRIDE | BUEGEL | ABRAZADERA |
| | 14 | | 0001308592L | 1.00 | FINECORSA | LIMIT SWITCH | FIN DE COURSE | ENDSCHALTER | FIN CARRERA |
| | 15 | | 0000304307L | 1.00 | GRANO | DOWEL | VIS SIX PANS CREUX | DUEBEL | PASADOR |
| | 16 | | 0000304302H | 1.00 | VITE | SCREW | VIS | SCHRAUBE | TORNILLO |
| | 17 | | 0511131403H | 1.00 | BANDELLA | GUARD | PROTECTION | SCHUTZ | BANDA |
| | 18 | | 0000301363D | 1.00 | DADO | NUT | ECROU | MUTTER | TUERCA |
| | 19 | | 0000644292H | 1.00 | ANELLO RASCHIATORE | SCRAPING RING | BAGUE DE RACLAGE | ABSTREIFRING | ANILLO RASCADOR |
| | 20 | | 0321940806A | 1.00 | PERNO | PIN | PIVOT | BOLZEN | PERNO |
| | 21 | | 0000309369F | 1.00 | VITE | SCREW | VIS | SCHRAUBE | TORNILLO |
| | 22 | | 0319016123G | 1.00 | POMOLO | BALL GRIP | POIGNEE | KUGELGRIFF | POMO |
| | 23 | | 0316332636C | 1.00 | PASTIGLIA | PAD | PASTILLE | BELAG | PASTILLA |
| | 24 | | 0000301559A | 1.00 | GHIERA | RING NUT | EMBOUT | NUTMUTTER | COLLAR |
| | 25 | | 0321940802B | 1.00 | BIELLA | CONNECTING ROD | BIELLE | PLEUELSTANGE | BIELA |
| | 26 | | 0321940805H | 1.00 | PERNO | PIN | PIVOT | BOLZEN | PERNO |
| | 27 | | 0510140009B | 1.00 | SUPPORTO | SUPPORT | SUPPORT | STUETZE | SOPORTE |
| | 28 | | 0311131407C | 1.00 | CARTER | COVER | CARTER | DECKEL | CARTER |
| | 29 | | 0001308846L | 1.00 | FINECORSA PER CILINDRO | LIMIT SWITCH | FIN DE COURSE | ENDSCHALTER | FIN CARRERA |
| | 30 | | 0001500316H | 1.00 | SUPPORTO | SUPPORT | SUPPORT | STUETZE | SOPORTE |
| | 31 | | 0001502999L | 1.00 | CILINDRO PNEUMATICO | PNEUMATIC CYLINDER | CYLINDRE PNEUMATIQUE | PNEUMATIKZYLINDER | CILINDRO NEUMATICO |
| | 32 | | 0311131406A | 1.00 | LAMIERA | PLATE | TOLE | BLECH | CHAPA |
| | 33 | | 0000309224H | 1.00 | VITE | SCREW | VIS | SCHRAUBE | TORNILLO |
| | 34 | | 0311131409G | 1.00 | DISTANZIALE | SPACER | ENTRETOISE | DISTANZSTUECK | DISTANCIADOR |
| | 35 | | 0511131408L | 1.00 | SUPPORTO | SUPPORT | SUPPORT | STUETZE | SOPORTE |
| | 36 | | 0000309181F | 4.00 | VITE | SCREW | VIS | SCHRAUBE | TORNILLO |
| | 37 | | 0000305181B | 4.00 | ROSETTA | WASHER | RONDELLE | SCHEIBE | ARANDELA |
| | 38 | | 0000301301C | 1.00 | DADO | NUT | ECROU | MUTTER | TUERCA |
| | 39 | | 0000304245G | 1.00 | VITE | SCREW | VIS | SCHRAUBE | TORNILLO |

| scm | SUPERSET XL | GR.TTL INTEGRATO C/CONTROL.A MICROPROCES - (p.20,06,2007)<br>-<br>- | 227-5213-0 |
|---|---|---|---|

| N | P | C | CODICE | Q.TY | DENOMINAZIONE | DESCRIPTION | DESIGNATION | BEZEICHNUNG | DENOMINACION |
|---|---|---|---|---|---|---|---|---|---|
| | 40 | | 0000309145A | 3.00 | VITE | SCREW | VIS | SCHRAUBE | TORNILLO |
| | 41 | | 0338435338B | 1.00 | SUPPORTO | SUPPORT | SUPPORT | STUETZE | SOPORTE |
| | 42 | | 0739715095E | 1.00 | GUIDA | GUIDE | GUIDE | FUEHRUNG | GUIA |
| | 43 | | 0000305121E | 4.00 | ROSETTA | WASHER | RONDELLE | SCHEIBE | ARANDELA |
| | 44 | | 0000309123D | 4.00 | VITE | SCREW | VIS | SCHRAUBE | TORNILLO |
| | 45 | | 0001340606A | 1.00 | MODULO DI TRASLAZ. | | | | |
| | 46 | | 0001344082B | 1.00 | ELETTROVALVOLA V.110 | SOLENOID VALVE | ELECTROVALVE | MAGNETVENTIL | ELECTROVALVULA |
| | 47 | | 0311131405H | 1.00 | PERNO | PIN | PIVOT | BOLZEN | PERNO |
| | 48 | | 0000606040G | 1.00 | CUSCINETTO | BEARING | ROULEMENT | LAGER | COJINETE |
| | 49 | | 0319461228A | 1.00 | RUOTA | WHEEL | ROUE | RAD | RUEDA |
| | 50 | | 0001340607C | 1.00 | BANDELLA MAGNETICA | GUARD | PROTECTION | SCHUTZ | BANDA |
| | 51 | | 0311131404F | 1.00 | ATTACCO | CONNECTING ROD | BARRE FIXATION | STAB | CONEXION |
| | 52 | | 0001344082B | 1.00 | ELETTROVALVOLA V.110 | SOLENOID VALVE | ELECTROVALVE | MAGNETVENTIL | ELECTROVALVULA |
| | 53 | | 0311131411A | 1.00 | CAMMA | CAM | CAME | NOCKEN | EXCENTRICO |
| | 54 | | 0001308592L | 1.00 | FINECORSA | LIMIT SWITCH | FIN DE COURSE | ENDSCHALTER | FIN CARRERA |
| | 55 | | 0001508862E | 2.00 | VALVOLA | VALVE | VALVE | VENTIL | VALV. |
| | 56 | | 0001508824E | 2.00 | VALVOLA REGOLATRICE | VALVE | SOUPAPE DE REGLAGE | EINSTELLVENTIL | VALVULA REGULADORA |
| | 57 | | 0001505004B | 1.00 | MANOMETRO | PRESSURE GAUGE | MANOMETRE | MANOMETER | MANOMETRO |
| | 58 | | 0001505066C | 1.00 | MANOMETRO | PRESSURE GAUGE | MANOMETRE | MANOMETER | MANOMETRO |
| | 59 | | 0317542103H | 1.00 | MOLLA | SPRING | RESSORT | FEDER | RESORTE |

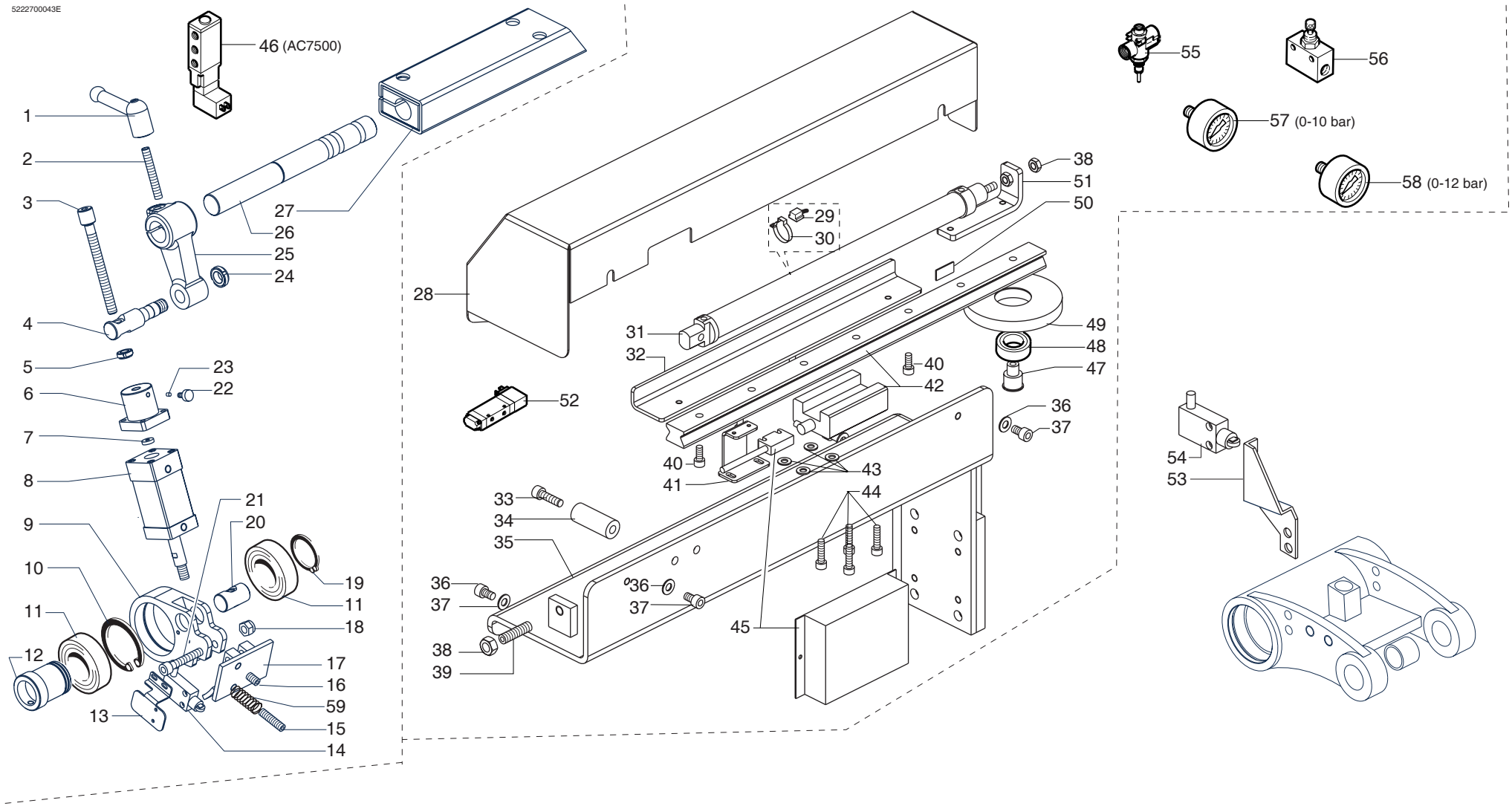


| scm | SUPERSET XL | GR.TTL INTEGRATO C/CONTROL.A MICROPROCES - (01.01.1901 -> - p.20,06,2007)<br>-<br>- | 227-5213-0 |
|---|---|---|---|

| N | P | C | CODICE | Q.TY | DENOMINAZIONE | DESCRIPTION | DESIGNATION | BEZEICHNUNG | DENOMINACION |
|---|---|---|---|---|---|---|---|---|---|
| | 01.01.1901 -> 01.01.3000 | | | | Note: ----- | | | | |
| 1 | | | 2911135100A | 1.00 | MANDRINO | SPINDLE | MANDRIN | SPINDEL | MANDRIL |
| 2 | | | 0311130817B | 1.00 | ANGOLARE | SQUARE SUPPORT | CORNIERE | WINKELSUPPORT | ESQUINERO |
| 3 | | | 2911135105B | 1.00 | SBLOCCO IDRAULICO | | | | |
| 4 | | | 0001900205G | 2.00 | NIPPLO | NIPPLE | NIPPLE | NIPPEL | NIPLE |
| 5 | | | 0001900206L | 2.00 | RACCORDO | FITTING | RACCORD | ANSCHLUSS | CONEXION |
| 6 | | | 0000641310D | 1.00 | TUBO | HOSE | TUYAU | SCHLAUCH | TUBO |
| 7 | | | 0000641309C | 1.00 | CURVA | ELBOW | COURBE | KNIE | CODO |
| 8 | | | 0000305372G | 1.00 | ROSETTA | WASHER | RONDELLE | SCHEIBE | ARANDELA |
| 9 | | | 0002030123B | 1.00 | MOLTIPLICATORE | MULTIPLEXER | MULTIPLICATEUR | MULTIPLIKATOR | MULTIPLICADOR |
| 10 | | | 0311136426H | 1.00 | ANGOLARE | SQUARE SUPPORT | CORNIERE | WINKELSUPPORT | ESQUINERO |
| 11 | | | 0002402042L | 1.00 | OLIO | OIL | HUILE | OEL | ACEITE |
| 12 | | | 0001508862E | 1.00 | VALVOLA | VALVE | VALVE | VENTIL | VALV. |
| 13 | | | 0001502033L | 1.00 | ATTUATORE | ACTUATOR | ACTIONNEUR | ANTRIEB | ACCIONADOR |
| 14 | | | 0001344082B | 1.00 | ELETTROVALVOLA V.110 | SOLENOID VALVE | ELECTROVALVE | MAGNETVENTIL | ELECTROVALVULA |
| 15 | | | 0311136427A | 1.00 | TARGHETTA | RATING PLATE | PLAQUETTE | SCHILD | TARJETA |
| 16 | | | 0001347321C | 1.00 | CAMMA TCX-10-34 | CAM | CAME ACTIONNEMENT | TREIBNOCKEN | EXCENT.ACC. |
| 17 | | | 0001347322E | 2.00 | CAMMA TCX-00-24 | CAM | CAME | NOCKEN | EXCENTRICO |
| 18 | | | 0331919070B | 1.00 | GUIDA PORTACAMME | CAM HOLDER GUIDE | GUIDE PORTE-CAMES | NOCKENHALTER | GUIA PORTA EXC. |
| 19 | | | 0002400034A | 1.00 | OLIO | OIL | HUILE | OEL | ACEITE |
| 20 | | | 0002400035C | 1.00 | OLIO | OIL | HUILE | OEL | ACEITE |
| 21 | | | 0001344087C | 1.00 | ELETTROVALVOLA | SOLENOID VALVE | ELECTROVALVE | MAGNETVENTIL | ELECTROVALV. |
| 22 | | | 0334019601F | 1.00 | TARGA | RATING PLATE | PLAQUE | SCHILD | TARJETA |
| 23 | | | 0336238261D | 1.00 | TARGA | RATING PLATE | PLAQUE | SCHILD | TARJETA |

5211100104e

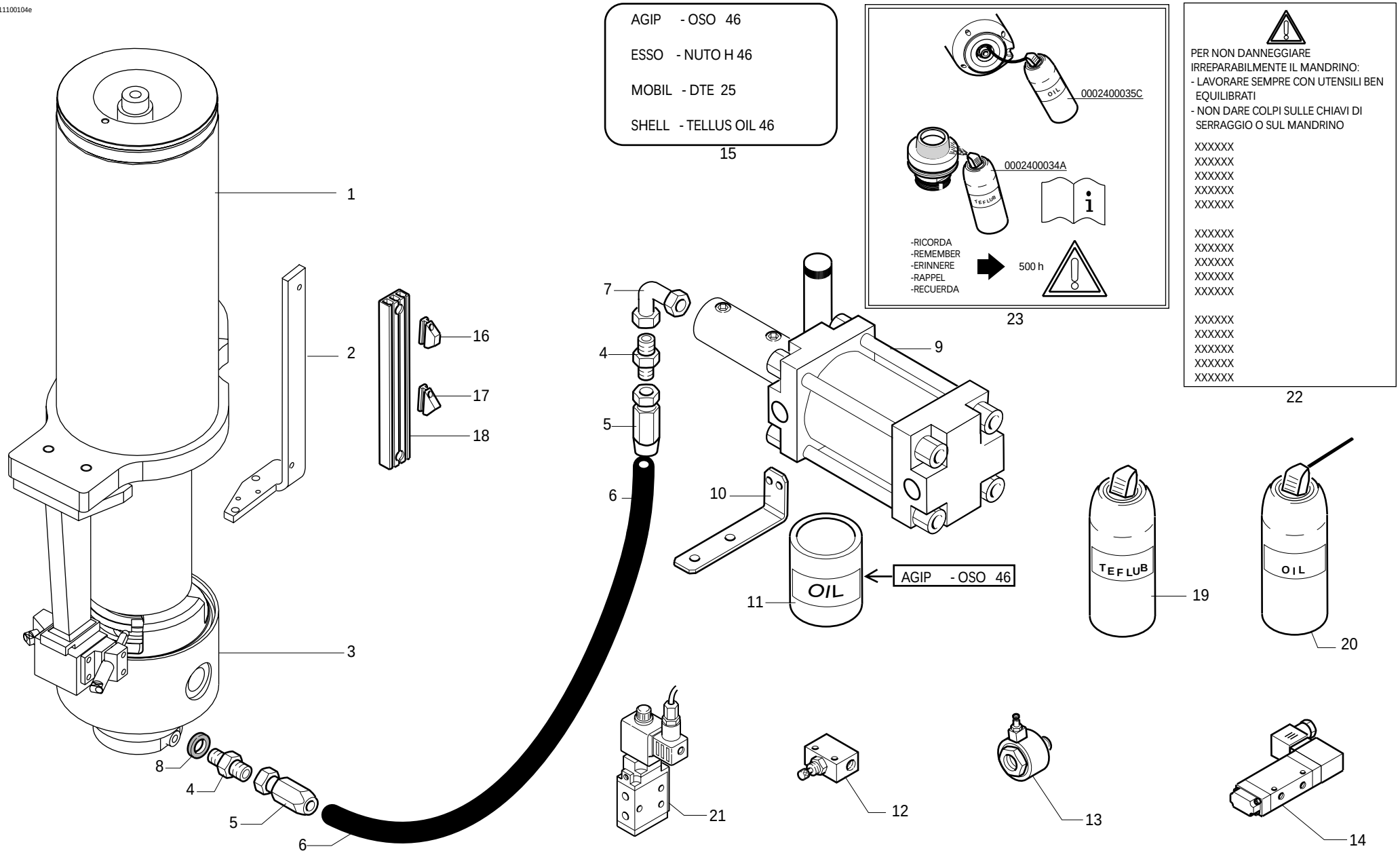


| | | | |
|---|---|---|---|
| scm | **SUPERSET XL** | **MANDRINO - (01.01.1901 -> - p.20,06,2007)**<br>**SPINDLE - MANDRIN**<br>**SPINDEL - MANDRIL** | **227-5230-0** |

| scm | SUPERSET XL | MANDRINO - (p.20,06,2007)<br>SPINDLE - MANDRIN<br>SPINDEL - MANDRIL | 227-5233-0 |
|---|---|---|---|

| N | P | C | CODICE | Q.TY | DENOMINAZIONE | DESCRIPTION | DESIGNATION | BEZEICHNUNG | DENOMINACION |
|---|---|---|---|---|---|---|---|---|---|
| | 01.01.1901 -> 01.01.3000 | | | | Note: ----- | | | | |
| 1 | | | 2922712500B | 1.00 | MANDRINO | SPINDLE | MANDRIN | SPINDEL | MANDRIL |
| 2 | | | 0311130817B | 1.00 | ANGOLARE | SQUARE SUPPORT | CORNIERE | WINKELSUPPORT | ESQUINERO |
| 3 | | | 2722712503D | 1.00 | MANDRINO | SPINDLE | MANDRIN | SPINDEL | MANDRIL |
| 4 | | | 0001900205G | 2.00 | NIPPLO | NIPPLE | NIPPLE | NIPPEL | NIPLE |
| 5 | | | 0001900206L | 2.00 | RACCORDO | FITTING | RACCORD | ANSCHLUSS | CONEXION |
| 6 | | | 0000641310D | 1.00 | TUBO | HOSE | TUYAU | SCHLAUCH | TUBO |
| 7 | | | 0000641309C | 1.00 | CURVA | ELBOW | COURBE | KNIE | CODO |
| 8 | | | 0000305372G | 1.00 | ROSETTA | WASHER | RONDELLE | SCHEIBE | ARANDELA |
| 9 | | | 0002030123B | 1.00 | MOLTIPLICATORE | MULTIPLEXER | MULTIPLICATEUR | MULTIPLIKATOR | MULTIPLICADOR |
| 10 | | | 0311136426H | 1.00 | ANGOLARE | SQUARE SUPPORT | CORNIERE | WINKELSUPPORT | ESQUINERO |
| 11 | | | 0002402042L | 1.00 | OLIO | OIL | HUILE | OEL | ACEITE |
| 12 | | | 0001508862E | 1.00 | VALVOLA | VALVE | VALVE | VENTIL | VALV. |
| 13 | | | 0001502033L | 1.00 | ATTUATORE | ACTUATOR | ACTIONNEUR | ANTRIEB | ACCIONADOR |
| 14 | | | 0001344082B | 1.00 | ELETTROVALVOLA V.110 | SOLENOID VALVE | ELECTROVALVE | MAGNETVENTIL | ELECTROVALVULA |
| 15 | | | 0311136427A | 1.00 | TARGHETTA | RATING PLATE | PLAQUETTE | SCHILD | TARJETA |
| 16 | | | 0001347321C | 1.00 | CAMMA TCX-10-34 | CAM | CAME ACTIONNEMENT | TREIBNOCKEN | EXCENT.ACC. |
| 17 | | | 0001347322E | 2.00 | CAMMA TCX-00-24 | CAM | CAME | NOCKEN | EXCENTRICO |
| 18 | | | 0331919070B | 1.00 | GUIDA PORTACAMME | CAM HOLDER GUIDE | GUIDE PORTE-CAMES | NOCKENHALTER | GUIA PORTA EXC. |
| 19 | | | 2736237456H | 1.00 | GR. ALBERO HSK63F | SHAFT | ARBRE | WELLE | EJE |
| 20 | | | 2722712506A | 1.00 | GR. SBLOCCO IDRAULICO | | | | |
| 21 | | | 0001344087C | 1.00 | ELETTROVALVOLA | SOLENOID VALVE | ELECTROVALVE | MAGNETVENTIL | ELECTROVALV. |
| 22 | | | 0002400034A | 1.00 | OLIO | OIL | HUILE | OEL | ACEITE |
| 23 | | | 0002400035C | 1.00 | OLIO | OIL | HUILE | OEL | ACEITE |
| 24 | | | 0334019601F | 1.00 | TARGA | RATING PLATE | PLAQUE | SCHILD | TARJETA |
| 25 | | | 0336238261D | 1.00 | TARGA | RATING PLATE | PLAQUE | SCHILD | TARJETA |

5222700078L

PER NON DANNEGGIARE
IRREPARABILMENTE IL MANDRINO:
- LAVORARE SEMPRE CON UTENSILI BEN EQUILIBRATI
- NON DARE COLPI SULLE CHIAVI DI SERRAGGIO O SUL MANDRINO

XXXXXX
XXXXXX
XXXXXX
XXXXXX
XXXXXX

XXXXXX
XXXXXX
XXXXXX
XXXXXX
XXXXXX

XXXXXX
XXXXXX
XXXXXX
XXXXXX
XXXXXX

24

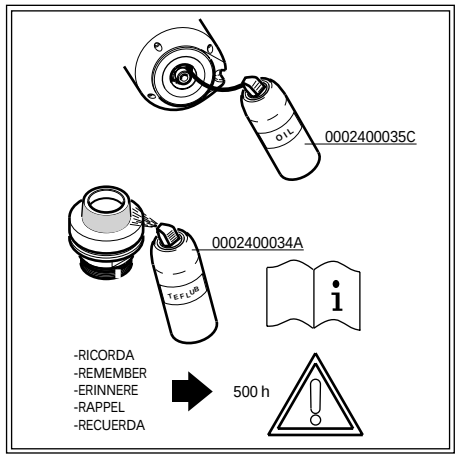


25

AGIP - OSO 46
ESSO - NUTO H 46
MOBIL - DTE 25
SHELL - TELLUS OIL 46

15

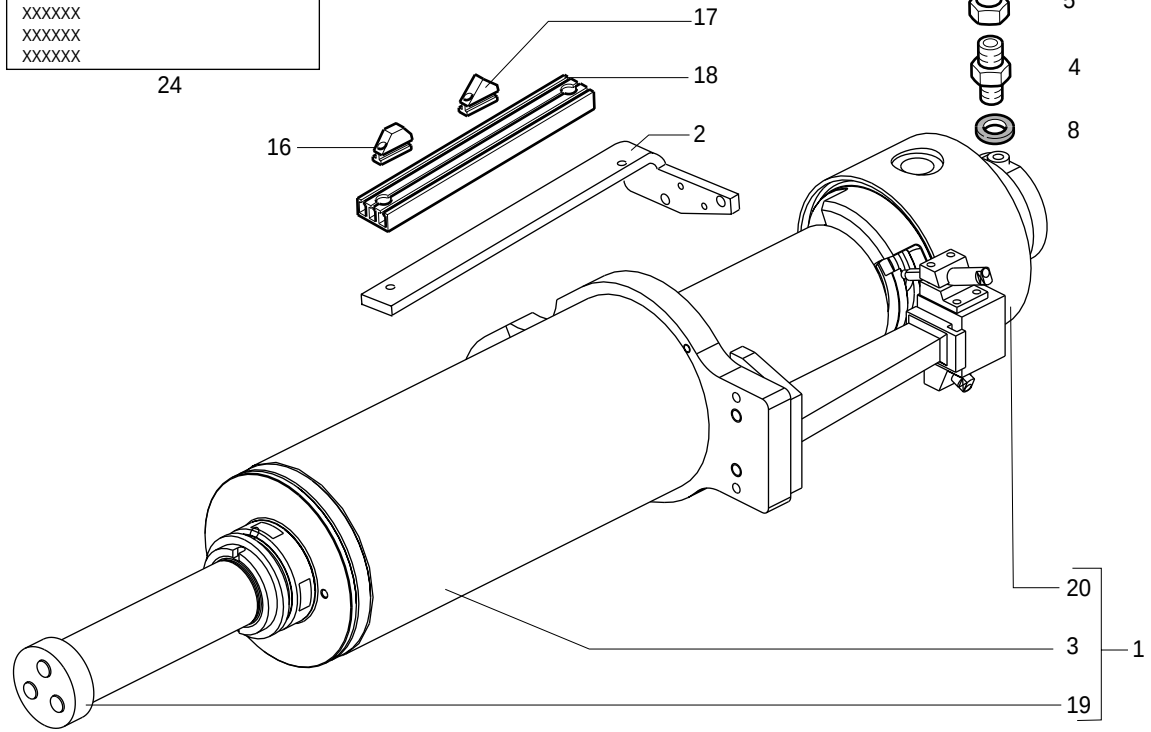


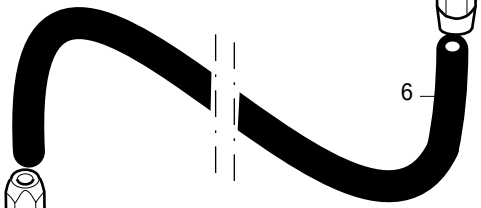


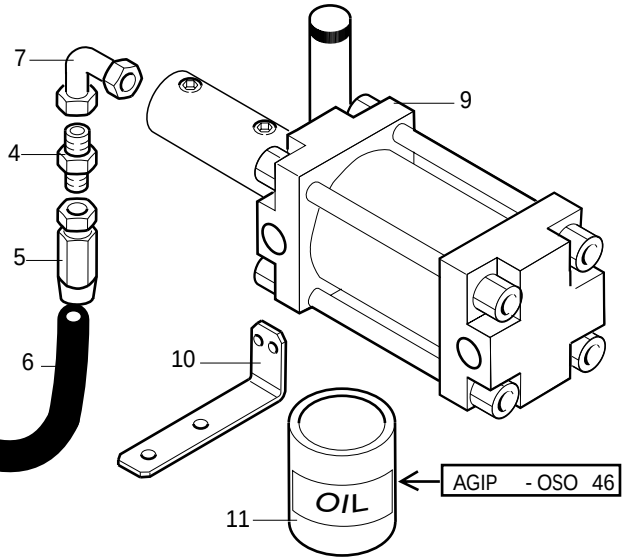


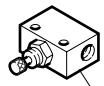





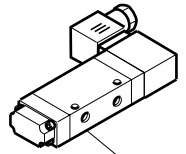


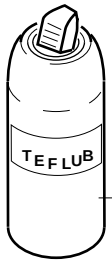


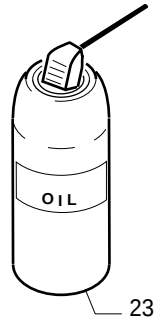


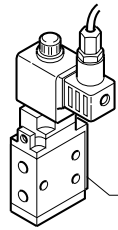


| | | | |
|---|---|---|---|
| scm | SUPERSET XL | MANDRINO - (01.01.1901 -> - p.20,06,2007)<br>SPINDLE - MANDRIN<br>SPINDEL - MANDRIL | 227-5233-0 |

| scm | SUPERSET XL | SUPPORTO PIGNA - (p.20,06,2007)<br>SUPPORT - SUPPORT<br>SUPPORT - SOPORTE | 227-5234-0 |
|---|---|---|---|

| N | P | C | CODICE | Q.TY | DENOMINAZIONE | DESCRIPTION | DESIGNATION | BEZEICHNUNG | DENOMINACION |
|---|---|---|---|---|---|---|---|---|---|
| | 01.01.1901 -> 01.01.3000 | | | | Note: ----- | | | | |
| 1 | | | 0522780064H | 1.00 | CARTER | COVER | CARTER | DECKEL | CARTER |
| 2 | | | 0366580019A | 3.00 | PERNO | PIN | PIVOT | BOLZEN | PERNO |
| 3 | | | 0522770802C | 1.00 | SUPPORTO | SUPPORT | SUPPORT | STUETZE | SOPORTE |
| 4 | | | 0366580020B | 1.00 | SUPPORTO | SUPPORT | SUPPORT | STUETZE | SOPORTE |

5222700083L

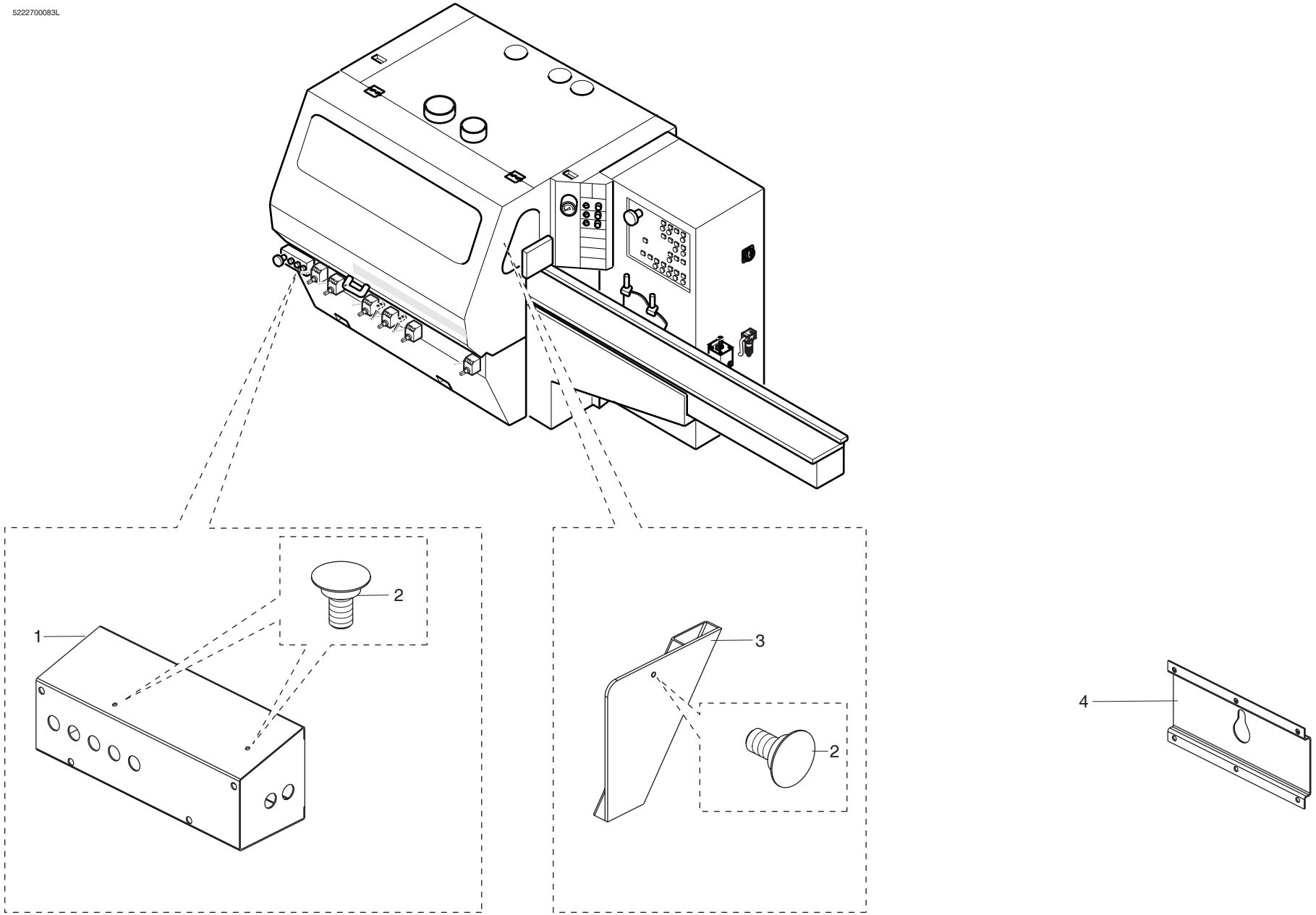


| | | | |
|---|---|---|---|
| scm | SUPERSET XL | SUPPORTO PIGNA - (01.01.1901 -> - p.20,06,2007)<br>SUPPORT - SUPPORT<br>SUPPORT - SOPORTE | 227-5234-0 |

| Cod. | Tav. | Pos | Cod. | Tav. | Pos. | Cod. | Tav. | Pos. | Cod. | Tav. | Pos. | Cod. | Tav. | Pos. |
|---|---|---|---|---|---|---|---|---|---|---|---|---|---|---|
| 0000300028C | 227-1701-0 | 4 | 0000301363D | 227-5213-0 | 18 | 0000301876C | 227-1319-0 | 7 | 0000305122G | 227-0703-X | 17 | 0000305361D | 227-1303-0 | 2 |
| 0000301181G | 227-0755-0 | 9 | 0000301368E | 227-0770-0 | 4 | 0000302305C | 227-5210-0 | 3 | 0000305159F | 227-0802-0 | 1 | 0000305361D | 227-1303-5 | 7 |
| 0000301181G | 227-1626-0 | 13 | 0000301368E | 227-1608-0 | 3 | 0000302305C | 227-5211-0 | 13 | 0000305181B | 227-5201-0 | 37 | 0000305361D | 227-1626-0 | 29 |
| 0000301301C | 227-0607-0 | 4 | 0000301368E | 227-1621-0 | 13 | 0000303309C | 227-1312-0 | 5 | 0000305181B | 227-5212-0 | 37 | 0000305372G | 227-5230-0 | 8 |
| 0000301301C | 227-0608-0 | 4 | 0000301422L | 227-1203-0 | 25 | 0000303339F | 227-1312-0 | 5 | 0000305181B | 227-5213-0 | 37 | 0000305372G | 227-5233-0 | 8 |
| 0000301301C | 227-0703-X | 3 | 0000301429E | 227-0721-0 | 9 | 0000304183E | 227-0755-0 | 10 | 0000305230F | 227-0727-0 | 9 | 0000305377H | 227-0704-0 | 8 |
| 0000301301C | 227-0736-0 | 3 | 0000301429E | 227-0723-0 | 9 | 0000304183E | 227-1626-0 | 11 | 0000305230F | 227-1317-0 | 8 | 0000305377H | 227-0705-0 | 8 |
| 0000301301C | 227-1201-0 | 11 | 0000301429E | 227-0723-X | 9 | 0000304245G | 227-1311-0 | 8 | 0000305230F | 227-1405-0 | 11 | 0000305377H | 227-0706-0 | 8 |
| 0000301301C | 227-1201-5 | 13 | 0000301429E | 227-0725-0 | 9 | 0000304245G | 227-5201-0 | 39 | 0000305243D | 227-0105-0 | 3 | 0000305757E | 227-0733-0 | 4 |
| 0000301301C | 227-1301-0 | 2 | 0000301429E | 227-5201-0 | 5 | 0000304245G | 227-5212-0 | 39 | 0000305243D | 227-0755-0 | 8 | 0000305780C | 227-1201-5 | 8 |
| 0000301301C | 227-5201-0 | 38 | 0000301429E | 227-5212-0 | 5 | 0000304245G | 227-5213-0 | 39 | 0000305243D | 227-1309-0 | 29 | 0000305780C | 227-1303-5 | 7 |
| 0000301301C | 227-5206-0 | 3 | 0000301429E | 227-5213-0 | 5 | 0000304246L | 227-1314-0 | 2 | 0000305243D | 227-1309-1 | 29 | 0000305850B | 227-0802-0 | 1 |
| 0000301301C | 227-5212-0 | 38 | 0000301430F | 227-0755-0 | 5 | 0000304246L | 227-1405-0 | 18 | 0000305245H | 227-1207-0 | 3 | 0000305851D | 227-0802-0 | 2 |
| 0000301301C | 227-5213-0 | 38 | 0000301430F | 227-1626-0 | 28 | 0000304246L | 227-5211-0 | 10 | 0000305245H | 227-1303-0 | 9 | 0000306262E | 227-0727-0 | 6 |
| 0000301303G | 227-0104-0 | 1 | 0000301431H | 227-1411-X | 33 | 0000304260H | 227-0204-0 | 10 | 0000305246A | 227-0104-0 | 2 | 0000307020C | 227-1604-0 | 17 |
| 0000301303G | 227-0105-0 | 2 | 0000301431H | 227-1412-0 | 12 | 0000304260H | 227-0204-X | 3 | 0000305246A | 227-0105-0 | 5 | 0000307316B | 227-1316-0 | 4 |
| 0000301303G | 227-0204-0 | 11 | 0000301431H | 227-1423-0 | 9 | 0000304260H | 227-0205-0 | 10 | 0000305246A | 227-0736-0 | 12 | 0000307319H | 227-1315-0 | 1 |
| 0000301303G | 227-0204-X | 4 | 0000301431H | 227-1423-0 | 9 | 0000304260H | 227-0206-0 | 10 | 0000305246A | 227-1309-0 | 24 | 0000307335B | 227-1201-0 | 15 |
| 0000301303G | 227-0205-0 | 11 | 0000301431H | 227-1424-0 | 9 | 0000304260H | 227-5206-0 | 11 | 0000305246A | 227-1309-0 | 24 | 0000307335B | 227-1303-0 | 12 |
| 0000301303G | 227-0206-0 | 11 | 0000301431H | 227-1424-0 | 9 | 0000304302H | 227-5201-0 | 16 | 0000305246A | 227-1309-1 | 24 | 0000307341D | 227-0204-0 | 7 |
| 0000301303G | 227-1301-0 | 6 | 0000301484A | 227-1201-5 | 23 | 0000304302H | 227-5212-0 | 16 | 0000305246A | 227-1309-1 | 24 | 0000307341D | 227-0204-X | 8 |
| 0000301303G | 227-1309-0 | 23 | 0000301484A | 227-1303-5 | 18 | 0000304302H | 227-5213-0 | 16 | 0000305249G | 227-1104-0 | 7 | 0000307341D | 227-0205-0 | 7 |
| 0000301303G | 227-1309-1 | 23 | 0000301537D | 227-0109-0 | 4 | 0000304305E | 227-1201-0 | 2 | 0000305249G | 227-1204-0 | 8 | 0000307341D | 227-0206-0 | 7 |
| 0000301303G | 227-5206-0 | 9 | 0000301559A | 227-0721-0 | 7 | 0000304307L | 227-5201-0 | 15 | 0000305249G | 227-1305-0 | 14 | 0000307341D | 227-5206-0 | 13 |
| 0000301309A | 227-1314-0 | 1 | 0000301559A | 227-0723-0 | 6 | 0000304307L | 227-5212-0 | 15 | 0000305249G | 227-1404-0 | 11 | 0000308121H | 227-0703-X | 19 |
| 0000301361L | 227-0718-0 | 8 | 0000301559A | 227-0723-X | 6 | 0000304307L | 227-5213-0 | 15 | 0000305249G | 227-1505-0 | 7 | 0000308202A | 227-1312-0 | 19 |
| 0000301361L | 227-1305-0 | 2 | 0000301559A | 227-0725-0 | 6 | 0000304309D | 227-0611-0 | 2 | 0000305249G | 227-1607-0 | 4 | 0000308283B | 227-1203-0 | 23 |
| 0000301361L | 227-5201-0 | 74 | 0000301559A | 227-1202-X | 13 | 0000304320F | 227-1312-0 | 5 | 0000305249G | 227-1607-0 | 4 | 0000308305L | 227-0736-0 | 2 |
| 0000301361L | 227-5210-0 | 4 | 0000301559A | 227-1319-0 | 6 | 0000304320F | 227-1322-0 | 2 | 0000305253E | 227-1202-0 | 8 | 0000308318G | 227-0703-X | 2 |
| 0000301361L | 227-5211-0 | 14 | 0000301559A | 227-5201-0 | 24 | 0000304329F | 227-1312-0 | 11 | 0000305294B | 227-0207-0 | 16 | 0000308354C | 227-0104-0 | 3 |
| 0000301363D | 227-0101-0 | 3 | 0000301559A | 227-5212-0 | 24 | 0000304339G | 227-1305-0 | 3 | 0000305302L | 227-1201-0 | 8 | 0000308354C | 227-0105-0 | 6 |
| 0000301363D | 227-0102-0 | 10 | 0000301559A | 227-5213-0 | 24 | 0000304365B | 227-0719-0 | 6 | 0000305302L | 227-1322-0 | 3 | 0000308354C | 227-1309-0 | 26 |
| 0000301363D | 227-0730-0 | 4 | 0000301849F | 227-1321-0 | 6 | 0000304365B | 227-0719-X | 6 | 0000305307A | 227-0611-0 | 3 | 0000308354C | 227-1309-1 | 26 |
| 0000301363D | 227-1201-0 | 9 | 0000301849F | 227-1701-0 | 22 | 0000304489E | 227-0721-0 | 5 | 0000305318D | 227-0603-0 | 6 | 0000308367A | 227-1621-0 | 1 |
| 0000301363D | 227-1301-0 | 11 | 0000301852B | 227-0704-0 | 5 | 0000304489E | 227-0723-0 | 4 | 0000305332C | 227-1305-0 | 1 | 0000308367A | 227-1621-0 | 9 |
| 0000301363D | 227-1303-0 | 1 | 0000301852B | 227-0705-0 | 5 | 0000304489E | 227-0725-0 | 4 | 0000305338F | 227-0105-0 | 7 | 0000308374E | 227-1201-0 | 13 |
| 0000301363D | 227-1312-0 | 12 | 0000301852B | 227-0706-0 | 5 | 0000304489E | 227-5201-0 | 2 | 0000305338F | 227-1309-0 | 30 | 0000308374E | 227-1303-0 | 6 |
| 0000301363D | 227-1313-0 | 1 | 0000301853D | 227-1209-0 | 12 | 0000304489E | 227-5212-0 | 2 | 0000305338F | 227-1309-1 | 30 | 0000308394G | 227-0736-0 | 13 |
| 0000301363D | 227-1314-0 | 13 | 0000301853D | 227-1309-0 | 11 | 0000304489E | 227-5213-0 | 2 | 0000305338F | 227-1501-X | 34 | 0000308408H | 227-1203-0 | 23 |
| 0000301363D | 227-1410-0 | 13 | 0000301853D | 227-1309-1 | 11 | 0000305044B | 227-1201-5 | 8 | 0000305340L | 227-0718-0 | 3 | 0000308422G | 227-0704-0 | 7 |
| 0000301363D | 227-1501-X | 16 | 0000301853D | 227-1318-0 | 12 | 0000305044B | 227-1303-5 | 7 | 0000305340L | 227-5201-0 | 79 | 0000308422G | 227-0705-0 | 7 |
| 0000301363D | 227-1621-0 | 2 | 0000301853D | 227-1320-0 | 12 | 0000305121E | 227-5201-0 | 43 | 0000305361D | 227-0755-0 | 6 | 0000308422G | 227-0706-0 | 7 |
| 0000301363D | 227-5201-0 | 18 | 0000301853D | 227-1501-X | 12 | 0000305121E | 227-5212-0 | 43 | 0000305361D | 227-1201-0 | 8 | 0000308440E | 227-1103-0 | 16 |
| 0000301363D | 227-5212-0 | 18 | 0000301868F | 227-0207-0 | 3 | 0000305121E | 227-5213-0 | 43 | 0000305361D | 227-1201-5 | 8 | 0000308440E | 227-1203-0 | 16 |

| Cod. | Tav. | Pos | Cod. | Tav. | Pos. | Cod. | Tav. | Pos. | Cod. | Tav. | Pos. | Cod. | Tav. | Pos. |
|---|---|---|---|---|---|---|---|---|---|---|---|---|---|---|
| 0000308440E | 227-1304-0 | 16 | 0000309307E | 227-0205-0 | 13 | 0000601013E | 227-0714-0 | 13 | 0000603365D | 227-1607-0 | 13 | 0000605372A | 227-1505-0 | 5 |
| 0000308440E | 227-1403-0 | 16 | 0000309307E | 227-0206-0 | 13 | 0000601013E | 227-0715-0 | 5 | 0000603367H | 227-1607-0 | 13 | 0000605388E | 227-1305-0 | 12 |
| 0000308440E | 227-1504-0 | 16 | 0000309307E | 227-1501-X | 19 | 0000601013E | 227-0716-0 | 3 | 0000603506D | 227-0735-0 | 9 | 0000605389G | 227-1305-0 | 12 |
| 0000308447A | 227-1203-0 | 24 | 0000309307E | 227-5206-0 | 18 | 0000601013E | 227-0717-0 | 3 | 0000603783A | 227-1607-0 | 13 | 0000605577F | 227-1801-0 | 51 |
| 0000308485A | 227-1201-5 | 22 | 0000309323H | 227-1321-0 | 9 | 0000601020L | 227-0207-0 | 7 | 0000604041G | 227-1104-0 | 5 | 0000606009C | 227-1801-0 | 19 |
| 0000308485A | 227-1303-5 | 17 | 0000309369F | 227-5201-0 | 21 | 0000601020L | 227-1404-0 | 12 | 0000604041G | 227-1404-0 | 7 | 0000606038D | 227-0603-0 | 3 |
| 0000308565A | 227-1403-0 | 1 | 0000309369F | 227-5212-0 | 21 | 0000601060D | 227-1605-0 | 10 | 0000604041G | 227-1505-0 | 5 | 0000606040G | 227-0750-0 | 11 |
| 0000308565A | 227-1504-0 | 1 | 0000309369F | 227-5213-0 | 21 | 0000601070E | 227-1317-0 | 10 | 0000604046H | 227-1204-0 | 6 | 0000606040G | 227-1313-0 | 8 |
| 0000308566C | 227-1103-0 | 1 | 0000310059A | 227-0204-X | 11 | 0000601070E | 227-1801-0 | 8 | 0000604053C | 227-1104-0 | 5 | 0000606040G | 227-1314-0 | 17 |
| 0000308566C | 227-1203-0 | 1 | 0000310242H | 227-1202-0 | 9 | 0000601113G | 227-0760-0 | 25 | 0000604053C | 227-1404-0 | 7 | 0000606040G | 227-1701-0 | 47 |
| 0000308566C | 227-1304-0 | 1 | 0000310243A | 227-1314-0 | 6 | 0000601113G | 227-0760-K | 25 | 0000604053C | 227-1505-0 | 5 | 0000606040G | 227-1801-0 | 4 |
| 0000308566C | 227-1403-0 | 1 | 0000310245E | 227-0727-0 | 10 | 0000601113G | 227-0760-X | 25 | 0000604057B | 227-1204-0 | 6 | 0000606040G | 227-5201-0 | 48 |
| 0000308566C | 227-1504-0 | 1 | 0000310245E | 227-1317-0 | 9 | 0000601113G | 227-0760-Y | 25 | 0000604133C | 227-1305-0 | 12 | 0000606040G | 227-5212-0 | 48 |
| 0000308566C | 227-1606-0 | 1 | 0000310246G | 227-1104-0 | 8 | 0000601113G | 227-0760-Z | 25 | 0000604151A | 227-1104-0 | 5 | 0000606040G | 227-5213-0 | 48 |
| 0000308566C | 227-5207-0 | 17 | 0000310246G | 227-1204-0 | 9 | 0000601156H | 227-1411-0 | 5 | 0000604151A | 227-1404-0 | 7 | 0000606100E | 227-1105-0 | 9 |
| 0000308566C | 227-5208-0 | 1 | 0000310246G | 227-1305-0 | 15 | 0000601156H | 227-1411-0 | 5 | 0000604151A | 227-1505-0 | 5 | 0000606100E | 227-1205-0 | 9 |
| 0000309118D | 227-1208-0 | 4 | 0000310246G | 227-1404-0 | 10 | 0000601224C | 227-0730-0 | 13 | 0000604152C | 227-1104-0 | 5 | 0000606100E | 227-1306-0 | 9 |
| 0000309121L | 227-1322-0 | 5 | 0000310246G | 227-1505-0 | 8 | 0000601248D | 227-0107-0 | 6 | 0000604152C | 227-1404-0 | 7 | 0000606100E | 227-1411-X | 5 |
| 0000309123D | 227-5201-0 | 44 | 0000310246G | 227-1607-0 | 3 | 0000601248D | 227-0710-0 | 3 | 0000604152C | 227-1505-0 | 5 | 0000606100E | 227-1425-0 | 5 |
| 0000309123D | 227-5212-0 | 44 | 0000310246G | 227-1607-0 | 3 | 0000601248D | 227-0711-0 | 3 | 0000604202L | 227-0703-X | 14 | 0000606100E | 227-1503-0 | 11 |
| 0000309123D | 227-5213-0 | 44 | 0000310252L | 227-1313-0 | 5 | 0000601248D | 227-0712-0 | 3 | 0000604327E | 227-0740-0 | 5 | 0000606100E | 227-1506-0 | 9 |
| 0000309135L | 227-0703-X | 16 | 0000310252L | 227-1314-0 | 8 | 0000601248D | 227-0713-0 | 3 | 0000604352G | 227-1505-0 | 9 | 0000606100E | 227-1609-0 | 9 |
| 0000309145A | 227-5201-0 | 40 | 0000310363E | 227-1104-0 | 8 | 0000601248D | 227-0714-0 | 13 | 0000604357H | 227-0736-0 | 8 | 0000606100E | 227-1610-0 | 5 |
| 0000309145A | 227-5212-0 | 40 | 0000310363E | 227-1204-0 | 9 | 0000601248D | 227-0715-0 | 5 | 0000604381H | 227-1319-0 | 4 | 0000606100E | 227-1701-0 | 19 |
| 0000309145A | 227-5213-0 | 40 | 0000310363E | 227-1305-0 | 15 | 0000601248D | 227-0716-0 | 3 | 0000604382A | 227-0735-0 | 15 | 0000606102L | 227-0107-0 | 3 |
| 0000309180D | 227-1202-X | 10 | 0000310363E | 227-1404-0 | 10 | 0000601248D | 227-0717-0 | 3 | 0000604389F | 227-1319-0 | 4 | 0000606102L | 227-0107-5 | 3 |
| 0000309181F | 227-5201-0 | 36 | 0000310363E | 227-1505-0 | 8 | 0000601248D | 227-5201-0 | 66 | 0000605112L | 227-1505-0 | 9 | 0000606102L | 227-0109-0 | 3 |
| 0000309181F | 227-5212-0 | 36 | 0000310363E | 227-1607-0 | 3 | 0000601446D | 227-0760-0 | 23 | 0000605363B | 227-1204-0 | 6 | 0000606102L | 227-0710-0 | 4 |
| 0000309181F | 227-5213-0 | 36 | 0000310485D | 227-1505-0 | 8 | 0000601446D | 227-0760-K | 23 | 0000605364D | 227-1305-0 | 12 | 0000606102L | 227-0711-0 | 4 |
| 0000309199E | 227-1320-0 | 4 | 0000310485D | 227-1625-0 | 28 | 0000601446D | 227-0760-X | 23 | 0000605365F | 227-1305-0 | 12 | 0000606102L | 227-0712-0 | 4 |
| 0000309224H | 227-5201-0 | 33 | 0000316312D | 227-0730-0 | 5 | 0000601446D | 227-0760-Y | 23 | 0000605366H | 227-1305-0 | 12 | 0000606102L | 227-0713-0 | 4 |
| 0000309224H | 227-5212-0 | 33 | 0000316523B | 227-0101-0 | 5 | 0000601446D | 227-0760-Z | 23 | 0000605367A | 227-1305-0 | 12 | 0000606102L | 227-0714-0 | 3 |
| 0000309224H | 227-5213-0 | 33 | 0000316523B | 227-0102-0 | 12 | 0000602055E | 227-1503-0 | 8 | 0000605368C | 227-1204-0 | 6 | 0000606102L | 227-0715-0 | 3 |
| 0000309243H | 227-0755-0 | 7 | 0000316525F | 227-1301-0 | 10 | 0000602186C | 227-0709-0 | 5 | 0000605369E | 227-1104-0 | 5 | 0000606102L | 227-0716-0 | 11 |
| 0000309248L | 227-0741-0 | 4 | 0000316533C | 227-1608-0 | 2 | 0000602214C | 227-0760-0 | 30 | 0000605369E | 227-1404-0 | 7 | 0000606102L | 227-0717-0 | 11 |
| 0000309250C | 227-0755-0 | 20 | 0000316533C | 227-1621-0 | 12 | 0000602214C | 227-0760-K | 30 | 0000605369E | 227-1505-0 | 5 | 0000606102L | 227-5201-0 | 56 |
| 0000309250C | 227-1626-0 | 5 | 0000600476F | 227-1305-0 | 12 | 0000602214C | 227-0760-X | 30 | 0000605370F | 227-1104-0 | 5 | 0000606109E | 227-0703-X | 7 |
| 0000309267L | 227-1606-X | 7 | 0000601013E | 227-0107-0 | 6 | 0000602214C | 227-0760-Y | 30 | 0000605370F | 227-1404-0 | 7 | 0000606111H | 227-0735-0 | 5 |
| 0000309275F | 227-0755-0 | 21 | 0000601013E | 227-0107-5 | 6 | 0000602214C | 227-0760-Z | 30 | 0000605370F | 227-1505-0 | 5 | 0000606111H | 227-0736-0 | 6 |
| 0000309275F | 227-1626-0 | 8 | 0000601013E | 227-0520-0 | 3 | 0000602865D | 227-1605-0 | 6 | 0000605371H | 227-1104-0 | 5 | 0000606111H | 227-0740-0 | 2 |
| 0000309306C | 227-0718-0 | 2 | 0000601013E | 227-0710-0 | 3 | 0000603346D | 227-1607-0 | 13 | 0000605371H | 227-1404-0 | 7 | 0000606112A | 227-1801-0 | 22 |
| 0000309306C | 227-5201-0 | 80 | 0000601013E | 227-0711-0 | 3 | 0000603347F | 227-1607-0 | 13 | 0000605371H | 227-1505-0 | 5 | 0000606139H | 227-1103-0 | 6 |
| 0000309307E | 227-0204-0 | 13 | 0000601013E | 227-0712-0 | 3 | 0000603360C | 227-1625-0 | 10 | 0000605372A | 227-1104-0 | 5 | 0000606139H | 227-1203-0 | 6 |
| 0000309307E | 227-0204-X | 15 | 0000601013E | 227-0713-0 | 3 | 0000603361E | 227-1625-0 | 10 | 0000605372A | 227-1404-0 | 7 | 0000606139H | 227-1304-0 | 6 |

| Cod. | Tav. | Pos | Cod. | Tav. | Pos. | Cod. | Tav. | Pos. | Cod. | Tav. | Pos. | Cod. | Tav. | Pos. |
|---|---|---|---|---|---|---|---|---|---|---|---|---|---|---|
| 0000606139H | 227-1403-0 | 6 | 0000609309C | 227-0722-0 | 3 | 0000613041H | 227-1320-0 | 10 | 0000613045G | 227-1428-0 | 13 | 0000613375G | 227-1317-0 | 11 |
| 0000606139H | 227-1504-0 | 6 | 0000609309C | 227-0724-0 | 3 | 0000613041H | 227-1402-0 | 4 | 0000613045G | 227-1501-X | 9 | 0000613375G | 227-1501-X | 38 |
| 0000606139H | 227-1606-0 | 6 | 0000610062L | 227-0504-0 | 5 | 0000613041H | 227-1405-0 | 3 | 0000613045G | 227-1502-0 | 5 | 0000613502G | 227-0722-0 | 5 |
| 0000606165C | 227-1103-0 | 12 | 0000610062L | 227-0504-5 | 5 | 0000613041H | 227-1406-0 | 3 | 0000613045G | 227-1503-0 | 2 | 0000613502G | 227-0724-0 | 5 |
| 0000606165C | 227-1203-0 | 12 | 0000610062L | 227-0506-0 | 8 | 0000613041H | 227-1501-X | 10 | 0000613045G | 227-1507-0 | 5 | 0000613613C | 227-1801-0 | 18 |
| 0000606165C | 227-1304-0 | 12 | 0000610081L | 227-0504-5 | 5 | 0000613041H | 227-1502-0 | 3 | 0000613045G | 227-1601-0 | 3 | 0000616033E | 227-0108-0 | 1 |
| 0000606165C | 227-1403-0 | 12 | 0000613022H | 227-1317-0 | 14 | 0000613041H | 227-1503-0 | 3 | 0000613045G | 227-1602-0 | 3 | 0000616033E | 227-0201-0 | 6 |
| 0000606165C | 227-1504-0 | 12 | 0000613022H | 227-1801-0 | 7 | 0000613041H | 227-1507-0 | 3 | 0000613045G | 227-1603-0 | 3 | 0000616033E | 227-0201-1 | 6 |
| 0000606165C | 227-1606-0 | 12 | 0000613029D | 227-0735-0 | 21 | 0000613041H | 227-1601-0 | 4 | 0000613045G | 227-1604-0 | 12 | 0000616033E | 227-0201-5 | 6 |
| 0000606170C | 227-1103-0 | 6 | 0000613029D | 227-1201-5 | 30 | 0000613041H | 227-1602-0 | 4 | 0000613045G | 227-1605-0 | 7 | 0000616033E | 227-0202-0 | 6 |
| 0000606170C | 227-1203-0 | 6 | 0000613029D | 227-1303-5 | 22 | 0000613041H | 227-1603-0 | 4 | 0000613045G | 227-1801-0 | 35 | 0000616033E | 227-0202-5 | 6 |
| 0000606170C | 227-1304-0 | 6 | 0000613033B | 227-1105-0 | 12 | 0000613041H | 227-1604-0 | 14 | 0000613045G | 227-5209-0 | 6 | 0000616033E | 227-0203-0 | 3 |
| 0000606170C | 227-1403-0 | 6 | 0000613033B | 227-1205-0 | 1 | 0000613041H | 227-1801-0 | 36 | 0000613045G | 227-5211-0 | 2 | 0000616033E | 227-0730-0 | 8 |
| 0000606170C | 227-1504-0 | 6 | 0000613033B | 227-1306-0 | 1 | 0000613041H | 227-5209-0 | 4 | 0000613046L | 227-0722-0 | 4 | 0000616033E | 227-1408-0 | 6 |
| 0000606170C | 227-1606-0 | 6 | 0000613033B | 227-1405-0 | 13 | 0000613041H | 227-5211-0 | 3 | 0000613046L | 227-0724-0 | 4 | 0000616033E | 227-1410-0 | 8 |
| 0000606178A | 227-1625-0 | 4 | 0000613033B | 227-1411-X | 10 | 0000613044E | 227-1202-X | 15 | 0000613048D | 227-0704-0 | 2 | 0000616033E | 227-1428-0 | 6 |
| 0000606186G | 227-0603-X | 10 | 0000613033B | 227-1425-0 | 10 | 0000613045G | 227-0520-0 | 2 | 0000613048D | 227-0705-0 | 2 | 0000616034G | 227-0760-0 | 38 |
| 0000606205H | 227-0725-0 | 17 | 0000613033B | 227-1506-0 | 12 | 0000613045G | 227-0714-0 | 16 | 0000613048D | 227-0706-0 | 2 | 0000616057F | 227-0801-0 | 18 |
| 0000606205H | 227-5201-0 | 11 | 0000613033B | 227-1609-0 | 2 | 0000613045G | 227-0715-0 | 14 | 0000613050G | 227-0704-0 | 3 | 0000616058H | 227-0801-0 | 19 |
| 0000606205H | 227-5212-0 | 11 | 0000613034D | 227-1105-0 | 11 | 0000613045G | 227-0760-0 | 19 | 0000613050G | 227-0705-0 | 3 | 0000617201C | 227-0714-0 | 4 |
| 0000606205H | 227-5213-0 | 11 | 0000613034D | 227-1205-0 | 2 | 0000613045G | 227-0760-K | 19 | 0000613050G | 227-0706-0 | 3 | 0000617201C | 227-0715-0 | 4 |
| 0000606216B | 227-1625-0 | 22 | 0000613034D | 227-1306-0 | 2 | 0000613045G | 227-0760-X | 19 | 0000613050G | 227-1801-0 | 43 | 0000617477H | 227-0710-0 | 5 |
| 0000606227E | 227-0207-0 | 15 | 0000613034D | 227-1405-0 | 12 | 0000613045G | 227-0760-Y | 19 | 0000613073F | 227-1317-0 | 20 | 0000617477H | 227-0711-0 | 5 |
| 0000606244A | 227-0709-0 | 2 | 0000613034D | 227-1411-X | 9 | 0000613045G | 227-0760-Z | 19 | 0000613086D | 227-0107-0 | 9 | 0000617477H | 227-0712-0 | 5 |
| 0000606244A | 227-1321-0 | 7 | 0000613034D | 227-1425-0 | 9 | 0000613045G | 227-1102-0 | 2 | 0000613086D | 227-0107-5 | 9 | 0000617477H | 227-0713-0 | 5 |
| 0000608108E | 227-1319-0 | 11 | 0000613034D | 227-1506-0 | 11 | 0000613045G | 227-1106-0 | 5 | 0000613086D | 227-0601-0 | 9 | 0000617680H | 227-1604-0 | 10 |
| 0000608161F | 227-1103-0 | 12 | 0000613034D | 227-1609-0 | 1 | 0000613045G | 227-1202-0 | 5 | 0000613086D | 227-0711-0 | 14 | 0000617753D | 227-1625-0 | 5 |
| 0000608161F | 227-1203-0 | 12 | 0000613040F | 227-1202-X | 16 | 0000613045G | 227-1206-0 | 5 | 0000613086D | 227-0713-0 | 14 | 0000617759G | 227-1103-0 | 10 |
| 0000608161F | 227-1304-0 | 12 | 0000613041H | 227-0760-0 | 20 | 0000613045G | 227-1209-0 | 9 | 0000613086D | 227-0714-0 | 16 | 0000617759G | 227-1203-0 | 10 |
| 0000608161F | 227-1403-0 | 12 | 0000613041H | 227-0760-K | 20 | 0000613045G | 227-1302-0 | 5 | 0000613086D | 227-0715-0 | 14 | 0000617759G | 227-1304-0 | 10 |
| 0000608161F | 227-1504-0 | 12 | 0000613041H | 227-0760-X | 20 | 0000613045G | 227-1307-0 | 5 | 0000613086D | 227-0717-0 | 14 | 0000617759G | 227-1403-0 | 10 |
| 0000609068A | 227-1103-0 | 6 | 0000613041H | 227-0760-Y | 20 | 0000613045G | 227-1308-0 | 5 | 0000613086D | 227-5201-0 | 68 | 0000617759G | 227-1504-0 | 10 |
| 0000609068A | 227-1203-0 | 6 | 0000613041H | 227-0760-Z | 20 | 0000613045G | 227-1309-0 | 13 | 0000613114D | 227-1411-X | 30 | 0000617759G | 227-1606-0 | 9 |
| 0000609068A | 227-1304-0 | 6 | 0000613041H | 227-1102-0 | 3 | 0000613045G | 227-1309-1 | 13 | 0000613114D | 227-1412-0 | 14 | 0000619081L | 227-1701-0 | 11 |
| 0000609068A | 227-1403-0 | 6 | 0000613041H | 227-1106-0 | 3 | 0000613045G | 227-1310-0 | 4 | 0000613114D | 227-1423-0 | 6 | 0000619532G | 227-1701-0 | 28 |
| 0000609068A | 227-1504-0 | 6 | 0000613041H | 227-1202-0 | 3 | 0000613045G | 227-1311-0 | 3 | 0000613114D | 227-1424-0 | 6 | 0000619669H | 227-0101-0 | 11 |
| 0000609068A | 227-1606-0 | 6 | 0000613041H | 227-1206-0 | 3 | 0000613045G | 227-1318-0 | 9 | 0000613129F | 227-1312-0 | 13 | 0000619669H | 227-0102-0 | 3 |
| 0000609101A | 227-0722-0 | 10 | 0000613041H | 227-1209-0 | 10 | 0000613045G | 227-1320-0 | 9 | 0000613129F | 227-1411-0 | 5 | 0000619669H | 227-0733-0 | 1 |
| 0000609101A | 227-0724-0 | 10 | 0000613041H | 227-1302-0 | 3 | 0000613045G | 227-1402-0 | 3 | 0000613129F | 227-1412-0 | 9 | 0000619669H | 227-1407-0 | 1 |
| 0000609149C | 227-0716-0 | 2 | 0000613041H | 227-1307-0 | 3 | 0000613045G | 227-1405-0 | 5 | 0000613129F | 227-1413-0 | 5 | 0000619669H | 227-1407-1 | 8 |
| 0000609149C | 227-0717-0 | 2 | 0000613041H | 227-1308-0 | 3 | 0000613045G | 227-1406-0 | 5 | 0000613199D | 227-1413-0 | 5 | 0000619710E | 227-1701-0 | 36 |
| 0000609149C | 227-5201-0 | 64 | 0000613041H | 227-1309-0 | 14 | 0000613045G | 227-1411-X | 17 | 0000613375G | 227-0735-0 | 20 | 0000622010D | 227-1624-0 | 10 |
| 0000609241G | 227-0718-0 | 9 | 0000613041H | 227-1309-1 | 14 | 0000613045G | 227-1426-0 | 4 | 0000613375G | 227-1201-5 | 29 | 0000622014C | 227-1621-0 | 5 |
| 0000609241G | 227-5201-0 | 73 | 0000613041H | 227-1318-0 | 10 | 0000613045G | 227-1427-0 | 4 | 0000613375G | 227-1303-5 | 7 | 0000622018B | 227-1604-0 | 3 |

| Cod. | Tav. | Pos | Cod. | Tav. | Pos. | Cod. | Tav. | Pos. | Cod. | Tav. | Pos. | Cod. | Tav. | Pos. |
|---|---|---|---|---|---|---|---|---|---|---|---|---|---|---|
| 0000626025A | 227-1412-0 | 2 | 0000635143B | 227-1507-0 | 1 | 0000640190G | 227-1505-0 | 3 | 0000644062A | 227-0735-0 | 7 | 0000644273H | 227-1305-0 | 7 |
| 0000626025A | 227-1423-0 | 16 | 0000635239F | 227-1428-0 | 16 | 0000640190G | 227-1625-0 | 7 | 0000644062A | 227-0736-0 | 7 | 0000644278L | 227-0107-0 | 2 |
| 0000626025A | 227-1424-0 | 16 | 0000635255L | 227-0705-0 | 15 | 0000640226E | 227-0750-0 | 14 | 0000644062A | 227-0740-0 | 3 | 0000644278L | 227-0107-5 | 2 |
| 0000626058A | 227-0504-0 | 16 | 0000635264H | 227-0705-0 | 15 | 0000640385B | 227-0770-0 | 24 | 0000644071L | 227-1625-0 | 6 | 0000644278L | 227-0109-0 | 1 |
| 0000626058A | 227-0504-5 | 16 | 0000635270A | 227-1302-0 | 1 | 0000640402H | 227-0301-0 | 6 | 0000644074F | 227-0725-0 | 16 | 0000644278L | 227-0710-0 | 7 |
| 0000626553A | 227-1201-5 | 20 | 0000635270A | 227-1308-0 | 1 | 0000640677B | 227-0735-0 | 28 | 0000644074F | 227-5201-0 | 10 | 0000644278L | 227-0711-0 | 7 |
| 0000626553A | 227-1303-5 | 4 | 0000635270A | 227-1320-0 | 1 | 0000640963H | 227-0704-0 | 6 | 0000644074F | 227-5212-0 | 10 | 0000644278L | 227-0712-0 | 7 |
| 0000628003F | 227-0301-0 | 10 | 0000635270A | 227-1502-0 | 1 | 0000640963H | 227-0705-0 | 6 | 0000644074F | 227-5213-0 | 10 | 0000644278L | 227-0713-0 | 7 |
| 0000628011C | 227-0301-0 | 10 | 0000635270A | 227-1602-0 | 1 | 0000640979C | 227-1309-0 | 5 | 0000644256C | 227-0760-0 | 37 | 0000644278L | 227-0714-0 | 11 |
| 0000629131H | 227-1605-0 | 1 | 0000635321L | 227-1427-0 | 10 | 0000640979C | 227-1309-1 | 5 | 0000644256C | 227-0760-K | 37 | 0000644278L | 227-0715-0 | 11 |
| 0000629131H | 227-1701-0 | 38 | 0000635322B | 227-1428-0 | 16 | 0000641080E | 227-0760-0 | 1 | 0000644256C | 227-1308-0 | 12 | 0000644278L | 227-0716-0 | 9 |
| 0000629141L | 227-1605-0 | 1 | 0000635324F | 227-1427-0 | 10 | 0000641080E | 227-0760-K | 1 | 0000644256C | 227-5204-0 | 27 | 0000644278L | 227-0717-0 | 9 |
| 0000629291G | 227-0719-0 | 4 | 0000636104A | 227-0735-0 | 12 | 0000641178D | 227-1801-0 | 38 | 0000644260A | 227-1317-0 | 2 | 0000644278L | 227-0735-0 | 4 |
| 0000629291G | 227-0719-X | 4 | 0000636538B | 227-0735-0 | 10 | 0000641179F | 227-1801-0 | 31 | 0000644263G | 227-0750-0 | 13 | 0000644278L | 227-0740-0 | 8 |
| 0000631213F | 227-1801-0 | 44 | 0000637058D | 227-1320-0 | 6 | 0000641309C | 227-5230-0 | 7 | 0000644264L | 227-1312-0 | 2 | 0000644278L | 227-5201-0 | 55 |
| 0000635003E | 227-1601-0 | 1 | 0000637061L | 227-0705-0 | 13 | 0000641309C | 227-5233-0 | 7 | 0000644268H | 227-0107-0 | 10 | 0000644290D | 227-1701-0 | 20 |
| 0000635004G | 227-1601-0 | 1 | 0000638175C | 227-0704-0 | 6 | 0000641310D | 227-5230-0 | 6 | 0000644268H | 227-0107-5 | 10 | 0000644292H | 227-0725-0 | 19 |
| 0000635035C | 227-1206-0 | 1 | 0000638175C | 227-0706-0 | 6 | 0000641310D | 227-5233-0 | 6 | 0000644268H | 227-0520-0 | 5 | 0000644292H | 227-5201-0 | 19 |
| 0000635035C | 227-1307-0 | 1 | 0000638615G | 227-1202-X | 8 | 0000641626E | 227-0703-X | 4 | 0000644268H | 227-0601-0 | 10 | 0000644292H | 227-5212-0 | 19 |
| 0000635036E | 227-1603-0 | 1 | 0000639207C | 227-1209-0 | 6 | 0000644033L | 227-0750-0 | 10 | 0000644268H | 227-0703-X | 6 | 0000644292H | 227-5213-0 | 19 |
| 0000635038L | 227-1603-0 | 1 | 0000639207C | 227-1309-0 | 5 | 0000644033L | 227-1801-0 | 3 | 0000644268H | 227-0709-0 | 1 | 0000645005B | 227-0703-0 | 4 |
| 0000635039B | 227-1302-0 | 1 | 0000639207C | 227-1309-0 | 5 | 0000644036F | 227-0760-0 | 18 | 0000644268H | 227-0711-0 | 15 | 0000645005B | 227-0703-X | 12 |
| 0000635039B | 227-1308-0 | 1 | 0000639207C | 227-1309-1 | 5 | 0000644036F | 227-0760-K | 18 | 0000644268H | 227-0713-0 | 15 | 0000645015C | 227-0703-X | 10 |
| 0000635039B | 227-1320-0 | 1 | 0000639207C | 227-1309-1 | 5 | 0000644036F | 227-0760-X | 18 | 0000644268H | 227-0714-0 | 17 | 0000645018L | 227-0704-0 | 11 |
| 0000635039B | 227-1406-0 | 1 | 0000639207C | 227-1318-0 | 6 | 0000644036F | 227-0760-Y | 18 | 0000644268H | 227-0715-0 | 15 | 0000645018L | 227-0705-0 | 11 |
| 0000635039B | 227-1411-X | 14 | 0000639207C | 227-1501-X | 6 | 0000644036F | 227-0760-Z | 18 | 0000644268H | 227-0717-0 | 15 | 0000645018L | 227-0706-0 | 11 |
| 0000635039B | 227-1426-0 | 1 | 0000639401D | 227-0760-0 | 27 | 0000644036F | 227-1402-0 | 2 | 0000644268H | 227-1105-0 | 6 | 0000645020C | 227-1801-0 | 25 |
| 0000635039B | 227-1502-0 | 1 | 0000639401D | 227-0760-K | 27 | 0000644036F | 227-1610-0 | 1 | 0000644268H | 227-1205-0 | 12 | 0000645043B | 227-0760-0 | 29 |
| 0000635039B | 227-1602-0 | 1 | 0000639401D | 227-0760-X | 27 | 0000644037H | 227-1604-0 | 13 | 0000644268H | 227-1306-0 | 12 | 0000645043B | 227-0760-K | 29 |
| 0000635053A | 227-1202-0 | 1 | 0000639401D | 227-0760-Y | 27 | 0000644043A | 227-0709-0 | 3 | 0000644268H | 227-1310-0 | 3 | 0000645043B | 227-0760-X | 29 |
| 0000635055E | 227-1106-0 | 1 | 0000639401D | 227-0760-Z | 27 | 0000644043A | 227-1105-0 | 8 | 0000644268H | 227-1311-0 | 4 | 0000645043B | 227-0760-Y | 29 |
| 0000635055E | 227-1405-0 | 1 | 0000640004D | 227-0401-0 | 11 | 0000644043A | 227-1205-0 | 11 | 0000644268H | 227-1411-X | 2 | 0000645043B | 227-0760-Z | 29 |
| 0000635055E | 227-1426-0 | 1 | 0000640018D | 227-1309-0 | 16 | 0000644043A | 227-1306-0 | 11 | 0000644268H | 227-1411-X | 18 | 0000645045F | 227-1105-0 | 5 |
| 0000635055E | 227-1427-0 | 1 | 0000640018D | 227-1309-1 | 16 | 0000644043A | 227-1411-X | 4 | 0000644268H | 227-1425-0 | 2 | 0000645045F | 227-1205-0 | 7 |
| 0000635055E | 227-1507-0 | 1 | 0000640018D | 227-1320-0 | 7 | 0000644043A | 227-1425-0 | 4 | 0000644268H | 227-1426-0 | 5 | 0000645045F | 227-1306-0 | 7 |
| 0000635137L | 227-1206-0 | 1 | 0000640019F | 227-0401-0 | 6 | 0000644043A | 227-1503-0 | 10 | 0000644268H | 227-1427-0 | 5 | 0000645045F | 227-1405-0 | 16 |
| 0000635137L | 227-1307-0 | 1 | 0000640034G | 227-0401-0 | 10 | 0000644043A | 227-1506-0 | 8 | 0000644268H | 227-1428-0 | 15 | 0000645045F | 227-1411-X | 12 |
| 0000635139D | 227-1406-0 | 1 | 0000640036B | 227-0401-0 | 12 | 0000644043A | 227-1609-0 | 12 | 0000644268H | 227-1506-0 | 6 | 0000645045F | 227-1425-0 | 12 |
| 0000635139D | 227-1426-0 | 1 | 0000640054L | 227-0401-0 | 2 | 0000644043A | 227-1610-0 | 6 | 0000644268H | 227-1605-0 | 9 | 0000645045F | 227-1506-0 | 5 |
| 0000635142L | 227-1202-0 | 1 | 0000640178C | 227-1319-0 | 17 | 0000644048B | 227-0703-X | 8 | 0000644268H | 227-1609-0 | 11 | 0000645045F | 227-1609-0 | 6 |
| 0000635143B | 227-1106-0 | 1 | 0000640190G | 227-0607-0 | 2 | 0000644056H | 227-0109-0 | 2 | 0000644268H | 227-5201-0 | 69 | 0000645047A | 227-0703-0 | 2 |
| 0000635143B | 227-1405-0 | 1 | 0000640190G | 227-0608-0 | 2 | 0000644056H | 227-0716-0 | 10 | 0000644272F | 227-0609-0 | 4 | 0000645047A | 227-0703-X | 21 |
| 0000635143B | 227-1426-0 | 1 | 0000640190G | 227-1104-0 | 3 | 0000644056H | 227-0717-0 | 10 | 0000644272F | 227-0709-0 | 7 | 0000645048C | 227-1604-0 | 5 |
| 0000635143B | 227-1427-0 | 1 | 0000640190G | 227-1410-0 | 2 | 0000644056H | 227-5201-0 | 54 | 0000644273H | 227-1204-0 | 4 | 0000645053C | 227-1801-0 | 26 |

| Cod. | Tav. | Pos | Cod. | Tav. | Pos. | Cod. | Tav. | Pos. | Cod. | Tav. | Pos. | Cod. | Tav. | Pos. |
|---|---|---|---|---|---|---|---|---|---|---|---|---|---|---|
| 0000645054E | 227-0107-0 | 4 | 0000645324H | 227-1202-X | 18 | 0001308592L | 227-0106-0 | 2 | 0001314196G | 227-1204-0 | 5 | 0001315154L | 227-1607-0 | 1 |
| 0000645054E | 227-0707-0 | 4 | 0000646025E | 227-0502-0 | 4 | 0001308592L | 227-0714-0 | 20 | 0001314196G | 227-1305-0 | 10 | 0001315156D | 227-1404-0 | 9 |
| 0000645054E | 227-0707-5 | 4 | 0000646025E | 227-0503-0 | 6 | 0001308592L | 227-1202-X | 5 | 0001314355E | 227-0703-0 | 5 | 0001315156D | 227-1607-0 | 1 |
| 0000645054E | 227-0710-0 | 2 | 0000646025E | 227-0507-0 | 1 | 0001308592L | 227-1301-0 | 19 | 0001314384F | 227-1204-0 | 5 | 0001315162F | 227-1204-0 | 5 |
| 0000645054E | 227-0711-0 | 2 | 0000702331B | 227-1319-0 | 9 | 0001308592L | 227-1309-0 | 20 | 0001314384F | 227-1305-0 | 10 | 0001315162F | 227-1305-0 | 10 |
| 0000645054E | 227-0712-0 | 2 | 0000704016F | 227-0722-0 | 12 | 0001308592L | 227-1309-0 | 20 | 0001314551A | 227-1404-0 | 9 | 0001315195F | 227-1204-0 | 5 |
| 0000645054E | 227-0713-0 | 2 | 0000704016F | 227-0724-0 | 12 | 0001308592L | 227-1309-1 | 20 | 0001314551A | 227-1607-0 | 1 | 0001315195F | 227-1305-0 | 10 |
| 0000645054E | 227-0714-0 | 2 | 0001302053L | 227-0603-X | 4 | 0001308592L | 227-1309-1 | 20 | 0001315065A | 227-1204-0 | 5 | 0001315197A | 227-1404-0 | 9 |
| 0000645054E | 227-0715-0 | 2 | 0001304320H | 227-1201-5 | 21 | 0001308592L | 227-1600-5 | 4 | 0001315065A | 227-1305-0 | 10 | 0001315197A | 227-1607-0 | 1 |
| 0000645054E | 227-0716-0 | 1 | 0001304320H | 227-1303-5 | 13 | 0001308592L | 227-5201-0 | 14 | 0001315066C | 227-1404-0 | 9 | 0001315199E | 227-1204-0 | 5 |
| 0000645054E | 227-0717-0 | 1 | 0001306100D | 227-0504-0 | 1 | 0001308592L | 227-5201-0 | 61 | 0001315066C | 227-1607-0 | 1 | 0001315199E | 227-1305-0 | 10 |
| 0000645054E | 227-0735-0 | 3 | 0001306100D | 227-0504-5 | 1 | 0001308592L | 227-5212-0 | 14 | 0001315067E | 227-1204-0 | 5 | 0001315222D | 227-1404-0 | 9 |
| 0000645054E | 227-0736-0 | 9 | 0001306100D | 227-0506-0 | 3 | 0001308592L | 227-5212-0 | 54 | 0001315067E | 227-1305-0 | 10 | 0001315222D | 227-1607-0 | 1 |
| 0000645054E | 227-0740-0 | 6 | 0001307353B | 227-0707-0 | 12 | 0001308592L | 227-5213-0 | 14 | 0001315068G | 227-1204-0 | 5 | 0001315224H | 227-1204-0 | 5 |
| 0000645054E | 227-5201-0 | 65 | 0001307353B | 227-0707-5 | 14 | 0001308592L | 227-5213-0 | 54 | 0001315068G | 227-1305-0 | 10 | 0001315224H | 227-1305-0 | 10 |
| 0000645059F | 227-1209-0 | 14 | 0001307353B | 227-0760-K | 4 | 0001308647G | 227-0603-X | 1 | 0001315069L | 227-1204-0 | 5 | 0001315232E | 227-1404-0 | 9 |
| 0000645059F | 227-1309-0 | 17 | 0001307353B | 227-0760-X | 4 | 0001308647G | 227-0707-0 | 15 | 0001315069L | 227-1305-0 | 10 | 0001315232E | 227-1607-0 | 1 |
| 0000645059F | 227-1309-1 | 17 | 0001307353B | 227-0760-Y | 4 | 0001308647G | 227-0707-5 | 17 | 0001315074L | 227-1204-0 | 5 | 0001315234L | 227-1404-0 | 9 |
| 0000645059F | 227-1318-0 | 14 | 0001307353B | 227-0760-Z | 4 | 0001308647G | 227-0714-0 | 6 | 0001315074L | 227-1305-0 | 10 | 0001315234L | 227-1607-0 | 1 |
| 0000645059F | 227-1320-0 | 8 | 0001307745D | 227-1624-0 | 26 | 0001308695H | 227-1303-5 | 20 | 0001315093L | 227-1404-0 | 9 | 0001315235B | 227-1404-0 | 9 |
| 0000645059F | 227-1501-X | 14 | 0001307764D | 227-0604-0 | 10 | 0001308766L | 227-0504-0 | 7 | 0001315093L | 227-1607-0 | 1 | 0001315235B | 227-1607-0 | 1 |
| 0000645062B | 227-1801-0 | 16 | 0001307905D | 227-0104-0 | 5 | 0001308766L | 227-0504-5 | 7 | 0001315102L | 227-1404-0 | 9 | 0001315236D | 227-1404-0 | 9 |
| 0000645073E | 227-1625-0 | 19 | 0001307905D | 227-0731-0 | 1 | 0001308846L | 227-0719-0 | 12 | 0001315102L | 227-1607-0 | 1 | 0001315236D | 227-1607-0 | 1 |
| 0000645092E | 227-0703-X | 9 | 0001307905D | 227-0732-0 | 4 | 0001308846L | 227-0723-X | 3 | 0001315105F | 227-1404-0 | 9 | 0001320284B | 227-1104-0 | 1 |
| 0000645092E | 227-1319-0 | 14 | 0001307905D | 227-0760-0 | 4 | 0001308846L | 227-1201-5 | 19 | 0001315105F | 227-1607-0 | 1 | 0001320284B | 227-1505-0 | 1 |
| 0000645098H | 227-1606-X | 5 | 0001307905D | 227-1309-0 | 22 | 0001308846L | 227-1303-5 | 5 | 0001315106H | 227-1204-0 | 5 | 0001321019B | 227-1104-0 | 1 |
| 0000645159H | 227-0735-0 | 17 | 0001307905D | 227-1309-1 | 22 | 0001308846L | 227-1501-X | 21 | 0001315106H | 227-1305-0 | 10 | 0001321019B | 227-1505-0 | 1 |
| 0000645169L | 227-1103-0 | 9 | 0001307924D | 227-0741-0 | 2 | 0001308846L | 227-1600-5 | 5 | 0001315107A | 227-1204-0 | 5 | 0001321024B | 227-1104-0 | 1 |
| 0000645169L | 227-1203-0 | 9 | 0001307924D | 227-1317-0 | 3 | 0001308846L | 227-5201-0 | 29 | 0001315107A | 227-1305-0 | 10 | 0001321024B | 227-1505-0 | 1 |
| 0000645169L | 227-1304-0 | 9 | 0001307992G | 227-0603-X | 7 | 0001308846L | 227-5212-0 | 29 | 0001315109E | 227-1204-0 | 5 | 0001321029C | 227-1104-0 | 1 |
| 0000645169L | 227-1403-0 | 9 | 0001308055A | 227-0101-0 | 16 | 0001308846L | 227-5213-0 | 29 | 0001315109E | 227-1305-0 | 10 | 0001321029C | 227-1505-0 | 1 |
| 0000645169L | 227-1504-0 | 9 | 0001308055A | 227-0102-0 | 16 | 0001309395C | 227-0604-0 | 6 | 0001315110F | 227-1204-0 | 5 | 0001321045F | 227-1104-0 | 1 |
| 0000645169L | 227-1606-0 | 10 | 0001308055A | 227-1201-5 | 17 | 0001314108B | 227-1404-0 | 9 | 0001315110F | 227-1305-0 | 10 | 0001321045F | 227-1505-0 | 1 |
| 0000645184A | 227-0760-0 | 17 | 0001308055A | 227-1303-5 | 16 | 0001314108B | 227-1607-0 | 1 | 0001315115G | 227-1404-0 | 9 | 0001321046H | 227-1104-0 | 1 |
| 0000645184A | 227-0760-K | 17 | 0001308055A | 227-1501-X | 36 | 0001314114D | 227-1204-0 | 5 | 0001315115G | 227-1607-0 | 1 | 0001321046H | 227-1505-0 | 1 |
| 0000645184A | 227-0760-X | 17 | 0001308055A | 227-1600-5 | 8 | 0001314114D | 227-1305-0 | 10 | 0001315118D | 227-1404-0 | 9 | 0001321047A | 227-1104-0 | 1 |
| 0000645184A | 227-0760-Y | 17 | 0001308055A | 227-1801-0 | 47 | 0001314119E | 227-1204-0 | 5 | 0001315118D | 227-1607-0 | 1 | 0001321047A | 227-1505-0 | 1 |
| 0000645184A | 227-0760-Z | 17 | 0001308100F | 227-1201-5 | 20 | 0001314119E | 227-1305-0 | 10 | 0001315132C | 227-1404-0 | 9 | 0001321059F | 227-1104-0 | 1 |
| 0000645184A | 227-1503-0 | 5 | 0001308100F | 227-1303-5 | 4 | 0001314139G | 227-1404-0 | 9 | 0001315132C | 227-1607-0 | 1 | 0001321059F | 227-1505-0 | 1 |
| 0000645308E | 227-0760-0 | 28 | 0001308100F | 227-1501-X | 20 | 0001314139G | 227-1607-0 | 1 | 0001315135L | 227-1404-0 | 9 | 0001321067C | 227-1104-0 | 1 |
| 0000645308E | 227-0760-K | 28 | 0001308332H | 227-0101-0 | 16 | 0001314165B | 227-1404-0 | 9 | 0001315135L | 227-1607-0 | 1 | 0001321067C | 227-1505-0 | 1 |
| 0000645308E | 227-0760-X | 28 | 0001308332H | 227-1202-X | 23 | 0001314165B | 227-1607-0 | 1 | 0001315152E | 227-1404-0 | 9 | 0001321071A | 227-1104-0 | 1 |
| 0000645308E | 227-0760-Y | 28 | 0001308592L | 227-0103-0 | 2 | 0001314190D | 227-1404-0 | 9 | 0001315152E | 227-1607-0 | 1 | 0001321071A | 227-1505-0 | 1 |
| 0000645308E | 227-0760-Z | 28 | 0001308592L | 227-0105-0 | 1 | 0001314190D | 227-1607-0 | 1 | 0001315154L | 227-1404-0 | 9 | 0001321080L | 227-1104-0 | 1 |

| Cod. | Tav. | Pos | Cod. | Tav. | Pos. | Cod. | Tav. | Pos. | Cod. | Tav. | Pos. | Cod. | Tav. | Pos. |
|---|---|---|---|---|---|---|---|---|---|---|---|---|---|---|
| 0001321080L | 227-1505-0 | 1 | 0001331059H | 227-1305-0 | 10 | 0001331153G | 227-1305-0 | 10 | 0001331243H | 227-1204-0 | 5 | 0001334195L | 227-1204-0 | 5 |
| 0001321126H | 227-1104-0 | 1 | 0001331063F | 227-1104-0 | 1 | 0001331156D | 227-1204-0 | 5 | 0001331243H | 227-1305-0 | 10 | 0001334195L | 227-1305-0 | 10 |
| 0001321126H | 227-1505-0 | 1 | 0001331065A | 227-1104-0 | 1 | 0001331156D | 227-1305-0 | 10 | 0001331244A | 227-1204-0 | 5 | 0001334198F | 227-1404-0 | 9 |
| 0001321127A | 227-1104-0 | 1 | 0001331065A | 227-1505-0 | 1 | 0001331157F | 227-1204-0 | 5 | 0001331244A | 227-1305-0 | 10 | 0001334198F | 227-1607-0 | 1 |
| 0001321127A | 227-1505-0 | 1 | 0001331066C | 227-1104-0 | 1 | 0001331157F | 227-1305-0 | 10 | 0001331250C | 227-1404-0 | 9 | 0001334199H | 227-1204-0 | 5 |
| 0001321141L | 227-1104-0 | 1 | 0001331066C | 227-1505-0 | 1 | 0001331158H | 227-1204-0 | 5 | 0001331250C | 227-1607-0 | 1 | 0001334199H | 227-1305-0 | 10 |
| 0001321141L | 227-1505-0 | 1 | 0001331067E | 227-1104-0 | 1 | 0001331158H | 227-1305-0 | 10 | 0001331253L | 227-1404-0 | 9 | 0001336015A | 227-1104-0 | 1 |
| 0001321142B | 227-1104-0 | 1 | 0001331067E | 227-1505-0 | 1 | 0001331166E | 227-1404-0 | 9 | 0001331253L | 227-1607-0 | 1 | 0001336015A | 227-1505-0 | 1 |
| 0001321142B | 227-1505-0 | 1 | 0001331080B | 227-1104-0 | 1 | 0001331174B | 227-1404-0 | 9 | 0001331254B | 227-1404-0 | 9 | 0001336018G | 227-1104-0 | 1 |
| 0001321143D | 227-1104-0 | 1 | 0001331080B | 227-1505-0 | 1 | 0001331174B | 227-1607-0 | 1 | 0001331254B | 227-1607-0 | 1 | 0001336018G | 227-1505-0 | 1 |
| 0001321143D | 227-1505-0 | 1 | 0001331084A | 227-1404-0 | 9 | 0001331177H | 227-1404-0 | 9 | 0001331255D | 227-1404-0 | 9 | 0001336054C | 227-1104-0 | 1 |
| 0001321167E | 227-1104-0 | 1 | 0001331088L | 227-1204-0 | 5 | 0001331177H | 227-1607-0 | 1 | 0001331255D | 227-1607-0 | 1 | 0001336054C | 227-1505-0 | 1 |
| 0001321167E | 227-1505-0 | 1 | 0001331088L | 227-1305-0 | 10 | 0001331178A | 227-1404-0 | 9 | 0001331256F | 227-1404-0 | 9 | 0001336254G | 227-1505-0 | 1 |
| 0001322201H | 227-0736-0 | 1 | 0001331089B | 227-1404-0 | 9 | 0001331178A | 227-1607-0 | 1 | 0001331256F | 227-1607-0 | 1 | 0001336313C | 227-1607-0 | 1 |
| 0001322346F | 227-1701-0 | 32 | 0001331089B | 227-1607-0 | 1 | 0001331179C | 227-1404-0 | 9 | 0001331270E | 227-1404-0 | 9 | 0001336315G | 227-1607-0 | 1 |
| 0001323340D | 227-1701-0 | 32 | 0001331094B | 227-1404-0 | 9 | 0001331179C | 227-1607-0 | 1 | 0001331270E | 227-1607-0 | 1 | 0001337014L | 227-1505-0 | 1 |
| 0001323342H | 227-1701-0 | 32 | 0001331094B | 227-1607-0 | 1 | 0001331200G | 227-1404-0 | 9 | 0001331273B | 227-1404-0 | 9 | 0001337015B | 227-1505-0 | 1 |
| 0001330091D | 227-1505-0 | 1 | 0001331095D | 227-1404-0 | 9 | 0001331200G | 227-1607-0 | 1 | 0001331273B | 227-1607-0 | 1 | 0001337016D | 227-1505-0 | 1 |
| 0001330125G | 227-1505-0 | 1 | 0001331095D | 227-1607-0 | 1 | 0001331204F | 227-1204-0 | 5 | 0001331274D | 227-1404-0 | 9 | 0001337017F | 227-1505-0 | 1 |
| 0001330126L | 227-1505-0 | 1 | 0001331096F | 227-1404-0 | 9 | 0001331204F | 227-1305-0 | 10 | 0001331274D | 227-1607-0 | 1 | 0001337018H | 227-1505-0 | 1 |
| 0001330127B | 227-1505-0 | 1 | 0001331096F | 227-1607-0 | 1 | 0001331207C | 227-1204-0 | 5 | 0001331275F | 227-1404-0 | 9 | 0001337265B | 227-1505-0 | 1 |
| 0001330228F | 227-1505-0 | 1 | 0001331097H | 227-1404-0 | 9 | 0001331207C | 227-1305-0 | 10 | 0001331275F | 227-1607-0 | 1 | 0001337516E | 227-1404-0 | 9 |
| 0001331011F | 227-1104-0 | 1 | 0001331097H | 227-1607-0 | 1 | 0001331208E | 227-1104-0 | 1 | 0001331276H | 227-1404-0 | 9 | 0001337516E | 227-1607-0 | 1 |
| 0001331011F | 227-1505-0 | 1 | 0001331098A | 227-1404-0 | 9 | 0001331208E | 227-1505-0 | 1 | 0001331276H | 227-1607-0 | 1 | 0001337670A | 227-1204-0 | 5 |
| 0001331012H | 227-1104-0 | 1 | 0001331098A | 227-1607-0 | 1 | 0001331209G | 227-1204-0 | 5 | 0001331554H | 227-1204-0 | 5 | 0001337670A | 227-1305-0 | 10 |
| 0001331012H | 227-1505-0 | 1 | 0001331099C | 227-1404-0 | 9 | 0001331209G | 227-1305-0 | 10 | 0001331554H | 227-1305-0 | 10 | 0001337679A | 227-1104-0 | 1 |
| 0001331013A | 227-1104-0 | 1 | 0001331099C | 227-1607-0 | 1 | 0001331211A | 227-1204-0 | 5 | 0001331555A | 227-1204-0 | 5 | 0001337679A | 227-1505-0 | 1 |
| 0001331013A | 227-1505-0 | 1 | 0001331101G | 227-1404-0 | 9 | 0001331211A | 227-1305-0 | 10 | 0001331555A | 227-1305-0 | 10 | 0001337680B | 227-1104-0 | 1 |
| 0001331014C | 227-1104-0 | 1 | 0001331101G | 227-1607-0 | 1 | 0001331212C | 227-1204-0 | 5 | 0001331556C | 227-1204-0 | 5 | 0001337680B | 227-1505-0 | 1 |
| 0001331014C | 227-1505-0 | 1 | 0001331108C | 227-1104-0 | 1 | 0001331212C | 227-1305-0 | 10 | 0001331556C | 227-1305-0 | 10 | 0001337715G | 227-1104-0 | 1 |
| 0001331046A | 227-1202-X | 7 | 0001331108C | 227-1505-0 | 1 | 0001331223F | 227-1204-0 | 5 | 0001331610G | 227-1104-0 | 1 | 0001337715G | 227-1505-0 | 1 |
| 0001331046A | 227-1209-0 | 3 | 0001331109E | 227-1404-0 | 9 | 0001331223F | 227-1305-0 | 10 | 0001331610G | 227-1505-0 | 1 | 0001337716L | 227-1104-0 | 1 |
| 0001331046A | 227-1309-0 | 19 | 0001331109E | 227-1607-0 | 1 | 0001331226C | 227-1204-0 | 5 | 0001331664B | 227-1104-0 | 1 | 0001337716L | 227-1505-0 | 1 |
| 0001331046A | 227-1309-1 | 19 | 0001331113C | 227-1404-0 | 9 | 0001331226C | 227-1305-0 | 10 | 0001331664B | 227-1505-0 | 1 | 0001337717B | 227-1104-0 | 1 |
| 0001331046A | 227-1318-0 | 3 | 0001331113C | 227-1607-0 | 1 | 0001331227E | 227-1204-0 | 5 | 0001331665D | 227-1104-0 | 1 | 0001337717B | 227-1505-0 | 1 |
| 0001331046A | 227-1320-0 | 3 | 0001331119F | 227-1104-0 | 1 | 0001331227E | 227-1305-0 | 10 | 0001331665D | 227-1505-0 | 1 | 0001337718D | 227-1104-0 | 1 |
| 0001331046A | 227-1501-X | 3 | 0001331119F | 227-1505-0 | 1 | 0001331228G | 227-1204-0 | 5 | 0001331666F | 227-1104-0 | 1 | 0001337718D | 227-1505-0 | 1 |
| 0001331049G | 227-1204-0 | 5 | 0001331120G | 227-1104-0 | 1 | 0001331228G | 227-1305-0 | 10 | 0001331666F | 227-1505-0 | 1 | 0001337719F | 227-1104-0 | 1 |
| 0001331049G | 227-1305-0 | 10 | 0001331120G | 227-1505-0 | 1 | 0001331229L | 227-1204-0 | 5 | 0001331768C | 227-1104-0 | 1 | 0001337719F | 227-1505-0 | 1 |
| 0001331056B | 227-1204-0 | 5 | 0001331121L | 227-1104-0 | 1 | 0001331229L | 227-1305-0 | 10 | 0001331768C | 227-1505-0 | 1 | 0001337720G | 227-1104-0 | 1 |
| 0001331056B | 227-1305-0 | 10 | 0001331121L | 227-1505-0 | 1 | 0001331238H | 227-1204-0 | 5 | 0001334185H | 227-1404-0 | 9 | 0001337720G | 227-1505-0 | 1 |
| 0001331058F | 227-1104-0 | 1 | 0001331137D | 227-1204-0 | 5 | 0001331238H | 227-1305-0 | 10 | 0001334185H | 227-1607-0 | 1 | 0001337721L | 227-1204-0 | 5 |
| 0001331058F | 227-1505-0 | 1 | 0001331137D | 227-1305-0 | 10 | 0001331242F | 227-1204-0 | 5 | 0001334193E | 227-1204-0 | 5 | 0001337721L | 227-1305-0 | 10 |
| 0001331059H | 227-1204-0 | 5 | 0001331153G | 227-1204-0 | 5 | 0001331242F | 227-1305-0 | 10 | 0001334193E | 227-1305-0 | 10 | 0001337722B | 227-1204-0 | 5 |

| Cod. | Tav. | Pos | Cod. | Tav. | Pos. | Cod. | Tav. | Pos. | Cod. | Tav. | Pos. | Cod. | Tav. | Pos. |
|---|---|---|---|---|---|---|---|---|---|---|---|---|---|---|
| 0001337722B | 227-1305-0 | 10 | 0001337793B | 227-1305-0 | 10 | 0001337990L | 227-1701-0 | 32 | 0001340343B | 227-0760-Y | 14 | 0001347084L | 227-0402-0 | 1 |
| 0001337727C | 227-1204-0 | 5 | 0001337793B | 227-1305-0 | 10 | 0001338436F | 227-1701-0 | 32 | 0001340343B | 227-0760-Z | 14 | 0001347085B | 227-0402-0 | 1 |
| 0001337727C | 227-1305-0 | 10 | 0001337805H | 227-1204-0 | 5 | 0001338930D | 227-1404-0 | 9 | 0001340343B | 227-1600-5 | 9 | 0001347189C | 227-1309-1 | 9 |
| 0001337728E | 227-1204-0 | 5 | 0001337805H | 227-1305-0 | 10 | 0001338930D | 227-1607-0 | 1 | 0001340606A | 227-5201-0 | 45 | 0001347301A | 227-0707-0 | 22 |
| 0001337728E | 227-1305-0 | 10 | 0001337806A | 227-1204-0 | 5 | 0001338948C | 227-1801-0 | 27 | 0001340606A | 227-5212-0 | 45 | 0001347301A | 227-0707-5 | 24 |
| 0001337730H | 227-1204-0 | 5 | 0001337806A | 227-1305-0 | 10 | 0001338959F | 227-1404-0 | 9 | 0001340606A | 227-5213-0 | 45 | 0001347321C | 227-0105-1 | 4 |
| 0001337730H | 227-1305-0 | 10 | 0001337808E | 227-1204-0 | 5 | 0001338959F | 227-1607-0 | 1 | 0001340607C | 227-5201-0 | 50 | 0001347321C | 227-0730-0 | 15 |
| 0001337738F | 227-1204-0 | 5 | 0001337808E | 227-1305-0 | 10 | 0001338960G | 227-1404-0 | 9 | 0001340607C | 227-5212-0 | 50 | 0001347321C | 227-1202-X | 3 |
| 0001337738F | 227-1305-0 | 10 | 0001337809G | 227-1204-0 | 5 | 0001338960G | 227-1607-0 | 1 | 0001340607C | 227-5213-0 | 50 | 0001347321C | 227-1203-0 | 18 |
| 0001337739H | 227-1204-0 | 5 | 0001337809G | 227-1305-0 | 10 | 0001338961L | 227-1404-0 | 9 | 0001340688D | 227-0735-0 | 1 | 0001347321C | 227-1304-0 | 18 |
| 0001337739H | 227-1305-0 | 10 | 0001337814G | 227-1204-0 | 5 | 0001338961L | 227-1607-0 | 1 | 0001340689F | 227-0735-0 | 1 | 0001347321C | 227-1501-X | 31 |
| 0001337746C | 227-1104-0 | 1 | 0001337814G | 227-1305-0 | 10 | 0001338965H | 227-1404-0 | 9 | 0001340691L | 227-0735-0 | 1 | 0001347321C | 227-5230-0 | 16 |
| 0001337746C | 227-1505-0 | 1 | 0001337816B | 227-1204-0 | 5 | 0001338965H | 227-1607-0 | 1 | 0001340692B | 227-0735-0 | 1 | 0001347321C | 227-5233-0 | 16 |
| 0001337747E | 227-1104-0 | 1 | 0001337816B | 227-1305-0 | 10 | 0001338987E | 227-1404-0 | 9 | 0001340693D | 227-0735-0 | 1 | 0001347322E | 227-0105-1 | 3 |
| 0001337747E | 227-1505-0 | 1 | 0001337817D | 227-1204-0 | 5 | 0001338987E | 227-1607-0 | 1 | 0001340694F | 227-0735-0 | 1 | 0001347322E | 227-0730-0 | 16 |
| 0001337748G | 227-1104-0 | 1 | 0001337817D | 227-1305-0 | 10 | 0001338988G | 227-1404-0 | 9 | 0001340695H | 227-0735-0 | 1 | 0001347322E | 227-0760-0 | 13 |
| 0001337748G | 227-1505-0 | 1 | 0001337818F | 227-1204-0 | 5 | 0001338988G | 227-1607-0 | 1 | 0001340737H | 227-0735-0 | 1 | 0001347322E | 227-0760-K | 13 |
| 0001337749L | 227-1104-0 | 1 | 0001337818F | 227-1305-0 | 10 | 0001338994L | 227-1404-0 | 9 | 0001341093B | 227-1204-0 | 5 | 0001347322E | 227-0760-X | 13 |
| 0001337749L | 227-1505-0 | 1 | 0001337831C | 227-1104-0 | 1 | 0001338994L | 227-1607-0 | 1 | 0001341094D | 227-1505-0 | 1 | 0001347322E | 227-0760-Y | 13 |
| 0001337753G | 227-1104-0 | 1 | 0001337831C | 227-1505-0 | 1 | 0001338996D | 227-1404-0 | 9 | 0001341219A | 227-1505-0 | 1 | 0001347322E | 227-0760-Z | 13 |
| 0001337753G | 227-1505-0 | 1 | 0001337832E | 227-1104-0 | 1 | 0001338996D | 227-1607-0 | 1 | 0001342010G | 227-1701-0 | 59 | 0001347322E | 227-1202-X | 4 |
| 0001337754L | 227-1104-0 | 1 | 0001337832E | 227-1505-0 | 1 | 0001338997F | 227-1404-0 | 9 | 0001342011L | 227-1701-0 | 59 | 0001347322E | 227-1203-0 | 17 |
| 0001337754L | 227-1104-0 | 1 | 0001337834L | 227-1104-0 | 1 | 0001338997F | 227-1607-0 | 1 | 0001342012B | 227-1701-0 | 59 | 0001347322E | 227-1304-0 | 17 |
| 0001337754L | 227-1505-0 | 1 | 0001337834L | 227-1505-0 | 1 | 0001338998H | 227-1404-0 | 9 | 0001342013D | 227-1701-0 | 59 | 0001347322E | 227-1309-0 | 35 |
| 0001337754L | 227-1505-0 | 1 | 0001337835B | 227-1104-0 | 1 | 0001338998H | 227-1607-0 | 1 | 0001343017D | 227-1701-0 | 59 | 0001347322E | 227-1501-X | 32 |
| 0001337755B | 227-1104-0 | 1 | 0001337835B | 227-1505-0 | 1 | 0001339195E | 227-1404-0 | 9 | 0001344082B | 227-0401-0 | 20 | 0001347322E | 227-5230-0 | 17 |
| 0001337755B | 227-1505-0 | 1 | 0001337836D | 227-1104-0 | 1 | 0001339195E | 227-1607-0 | 1 | 0001344082B | 227-1201-5 | 11 | 0001347322E | 227-5233-0 | 17 |
| 0001337756D | 227-1104-0 | 1 | 0001337836D | 227-1505-0 | 1 | 0001339297B | 227-0735-0 | 1 | 0001344082B | 227-1303-5 | 12 | 0001347324L | 227-0105-1 | 3 |
| 0001337756D | 227-1505-0 | 1 | 0001337869D | 227-1104-0 | 1 | 0001339696H | 227-0735-0 | 1 | 0001344082B | 227-1501-X | 37 | 0001347498H | 227-1309-0 | 10 |
| 0001337757F | 227-1204-0 | 5 | 0001337869D | 227-1505-0 | 1 | 0001339739A | 227-1701-0 | 32 | 0001344082B | 227-5201-0 | 52 | 0001347498H | 227-1309-1 | 10 |
| 0001337757F | 227-1305-0 | 10 | 0001337870E | 227-1104-0 | 1 | 0001339776H | 227-1607-0 | 1 | 0001344082B | 227-5212-0 | 52 | 0001347514C | 227-0108-0 | 4 |
| 0001337758H | 227-1204-0 | 5 | 0001337870E | 227-1505-0 | 1 | 0001339788D | 227-1404-0 | 9 | 0001344082B | 227-5213-0 | 46 | 0001347514C | 227-0730-0 | 11 |
| 0001337758H | 227-1305-0 | 10 | 0001337871G | 227-1104-0 | 1 | 0001339788D | 227-1607-0 | 1 | 0001344082B | 227-5213-0 | 52 | 0001347519D | 227-1309-0 | 9 |
| 0001337759A | 227-1204-0 | 5 | 0001337871G | 227-1505-0 | 1 | 0001339789F | 227-1404-0 | 9 | 0001344082B | 227-5230-0 | 14 | 0001347519D | 227-1309-1 | 9 |
| 0001337759A | 227-1305-0 | 10 | 0001337873B | 227-1104-0 | 1 | 0001339789F | 227-1607-0 | 1 | 0001344082B | 227-5233-0 | 14 | 0001347586E | 227-0604-0 | 11 |
| 0001337760B | 227-1204-0 | 5 | 0001337873B | 227-1505-0 | 1 | 0001339790G | 227-1404-0 | 9 | 0001344087C | 227-0401-0 | 21 | 0001352063B | 227-1309-1 | 6 |
| 0001337760B | 227-1305-0 | 10 | 0001337874D | 227-1104-0 | 1 | 0001339790G | 227-1607-0 | 1 | 0001344087C | 227-1701-0 | 61 | 0001352064D | 227-1309-0 | 7 |
| 0001337763H | 227-1204-0 | 5 | 0001337874D | 227-1505-0 | 1 | 0001339791L | 227-1404-0 | 9 | 0001344087C | 227-5230-0 | 21 | 0001352064D | 227-1309-1 | 7 |
| 0001337763H | 227-1305-0 | 10 | 0001337883C | 227-0760-0 | 33 | 0001339791L | 227-1607-0 | 1 | 0001344087C | 227-5233-0 | 21 | 0001352111D | 227-1209-0 | 7 |
| 0001337764A | 227-1204-0 | 5 | 0001337883C | 227-0760-K | 33 | 0001340155C | 227-1701-0 | 58 | 0001344098F | 227-1201-5 | 27 | 0001352111D | 227-1318-0 | 7 |
| 0001337764A | 227-1305-0 | 10 | 0001337883C | 227-0760-X | 33 | 0001340156E | 227-1701-0 | 60 | 0001344098F | 227-1309-0 | 39 | 0001352115C | 227-1309-0 | 6 |
| 0001337791G | 227-1319-0 | 13 | 0001337883C | 227-0760-Y | 33 | 0001340343B | 227-0760-0 | 14 | 0001344098F | 227-1320-0 | 17 | 0001352115C | 227-1309-1 | 6 |
| 0001337793B | 227-1204-0 | 5 | 0001337883C | 227-0760-Z | 33 | 0001340343B | 227-0760-K | 14 | 0001344098F | 227-1600-5 | 6 | 0001352751B | 227-1204-0 | 10 |
| 0001337793B | 227-1204-0 | 5 | 0001337909L | 227-1625-0 | 27 | 0001340343B | 227-0760-X | 14 | 0001344098F | 227-5203-0 | 6 | 0001352751B | 227-1505-0 | 11 |

| Cod. | Tav. | Pos | Cod. | Tav. | Pos. | Cod. | Tav. | Pos. | Cod. | Tav. | Pos. | Cod. | Tav. | Pos. |
|---|---|---|---|---|---|---|---|---|---|---|---|---|---|---|
| 0001353149F | 227-0801-0 | 45 | 0001502999L | 227-5213-0 | 31 | 0001902158L | 227-0403-0 | 7 | 0001906089G | 227-0301-0 | 15 | 0002400035C | 227-5230-0 | 20 |
| 0001353217A | 227-0801-0 | 44 | 0001503029C | 227-1701-0 | 55 | 0001903002L | 227-5205-0 | 3 | 0001908001C | 227-0710-0 | 11 | 0002400035C | 227-5233-0 | 23 |
| 0001354448B | 227-0707-0 | 23 | 0001503268L | 227-0770-0 | 8 | 0001904001H | 227-0401-0 | 16 | 0001908001C | 227-0711-0 | 11 | 0002401040D | 227-0801-0 | 16 |
| 0001354448B | 227-0707-5 | 25 | 0001503268L | 227-5203-0 | 8 | 0001904061E | 227-1303-5 | 21 | 0001908001C | 227-0712-0 | 11 | 0002402029C | 227-1701-0 | 34 |
| 0001500035B | 227-0719-0 | 5 | 0001503268L | 227-5204-0 | 8 | 0001904064B | 227-0301-0 | 18 | 0001908001C | 227-0713-0 | 11 | 0002402040E | 227-0301-0 | 5 |
| 0001500053L | 227-1701-0 | 7 | 0001503331C | 227-1701-0 | 62 | 0001904116C | 227-0301-0 | 9 | 0001908001C | 227-0714-0 | 8 | 0002402042L | 227-1701-0 | 34 |
| 0001500316H | 227-5201-0 | 30 | 0001503387B | 227-5206-0 | 23 | 0001904155E | 227-0108-0 | 5 | 0001908001C | 227-0715-0 | 8 | 0002402042L | 227-5230-0 | 11 |
| 0001500316H | 227-5212-0 | 30 | 0001505004B | 227-0401-0 | 23 | 0001904155E | 227-0201-0 | 9 | 0001908001C | 227-0716-0 | 5 | 0002402042L | 227-5233-0 | 11 |
| 0001500316H | 227-5213-0 | 30 | 0001505004B | 227-5213-0 | 57 | 0001904155E | 227-0201-1 | 9 | 0001908001C | 227-0717-0 | 5 | 0300924702E | 227-1316-0 | 3 |
| 0001500415H | 227-1308-0 | 20 | 0001505066C | 227-0401-0 | 8 | 0001904155E | 227-0201-5 | 9 | 0001908001C | 227-5201-0 | 59 | 0300924702E | 227-1321-0 | 3 |
| 0001500415H | 227-1309-0 | 38 | 0001505066C | 227-1701-0 | 52 | 0001904155E | 227-0202-0 | 9 | 0001908005B | 227-0108-0 | 2 | 0300928001B | 227-1102-0 | 6 |
| 0001500415H | 227-1320-0 | 16 | 0001505066C | 227-5213-0 | 58 | 0001904155E | 227-0202-5 | 9 | 0001908005B | 227-0730-0 | 9 | 0300928001B | 227-1503-0 | 14 |
| 0001500415H | 227-5203-0 | 5 | 0001508113F | 227-0403-0 | 2 | 0001904155E | 227-0203-0 | 7 | 0001908042L | 227-0718-0 | 12 | 0300944604B | 227-1621-0 | 4 |
| 0001500415H | 227-5204-0 | 5 | 0001508428E | 227-0301-0 | 1 | 0001904155E | 227-0730-0 | 2 | 0001908042L | 227-5201-0 | 70 | 0300944604B | 227-1624-0 | 11 |
| 0001500562L | 227-1701-0 | 51 | 0001508824E | 227-5212-0 | 56 | 0001904155E | 227-0730-0 | 12 | 0001908155L | 227-0301-0 | 14 | 0301230004F | 227-1621-0 | 4 |
| 0001500961F | 227-0719-0 | 5 | 0001508824E | 227-5213-0 | 56 | 0001904160E | 227-0710-0 | 10 | 0001916014A | 227-0301-0 | 4 | 0302110031L | 227-0731-0 | 4 |
| 0001500961F | 227-0719-X | 5 | 0001508832B | 227-0301-0 | 12 | 0001904160E | 227-0711-0 | 10 | 0002030123B | 227-5230-0 | 9 | 0302110049H | 227-1107-0 | 3 |
| 0001501373L | 227-0723-X | 14 | 0001508832B | 227-0401-0 | 13 | 0001904160E | 227-0712-0 | 10 | 0002030123B | 227-5233-0 | 9 | 0302110049H | 227-1208-0 | 10 |
| 0001501464C | 227-1605-0 | 2 | 0001508832B | 227-0719-0 | 11 | 0001904160E | 227-0713-0 | 10 | 0002033488L | 227-0403-0 | 6 | 0302110049H | 227-1312-0 | 23 |
| 0001501890F | 227-1701-0 | 6 | 0001508845L | 227-0401-0 | 9 | 0001904160E | 227-0714-0 | 9 | 0002038165L | 227-1201-5 | 2 | 0302110049H | 227-1407-0 | 9 |
| 0001502030C | 227-1201-5 | 2 | 0001508862E | 227-0401-0 | 22 | 0001904160E | 227-0715-0 | 9 | 0002038165L | 227-1303-5 | 3 | 0302110049H | 227-1407-1 | 6 |
| 0001502030C | 227-1303-5 | 3 | 0001508862E | 227-1201-5 | 24 | 0001904160E | 227-0716-0 | 6 | 0002038165L | 227-1501-X | 22 | 0302110049H | 227-1411-X | 42 |
| 0001502033L | 227-0719-0 | 9 | 0001508862E | 227-1303-5 | 19 | 0001904160E | 227-0717-0 | 6 | 0002203008G | 227-0750-0 | 6 | 0302110049H | 227-1508-0 | 3 |
| 0001502033L | 227-5230-0 | 13 | 0001508862E | 227-1308-0 | 18 | 0001904160E | 227-5201-0 | 58 | 0002319122H | 227-0801-0 | 31 | 0302110049H | 227-1611-0 | 11 |
| 0001502033L | 227-5233-0 | 13 | 0001508862E | 227-5204-0 | 23 | 0001904525A | 227-0710-0 | 9 | 0002319123A | 227-0801-0 | 1 | 0302110050L | 227-0504-0 | 11 |
| 0001502050E | 227-0301-0 | 16 | 0001508862E | 227-5212-0 | 55 | 0001904525A | 227-0711-0 | 9 | 0002319124C | 227-0801-0 | 2 | 0302110050L | 227-0504-5 | 11 |
| 0001502051G | 227-0301-0 | 8 | 0001508862E | 227-5213-0 | 55 | 0001904525A | 227-0712-0 | 9 | 0002319125E | 227-0801-0 | 3 | 0302110050L | 227-0506-0 | 13 |
| 0001502095A | 227-1701-0 | 56 | 0001508862E | 227-5230-0 | 12 | 0001904525A | 227-0713-0 | 9 | 0002319126G | 227-0801-0 | 4 | 0302110057E | 227-0401-0 | 3 |
| 0001502104A | 227-0401-0 | 7 | 0001508862E | 227-5233-0 | 12 | 0001904525A | 227-0714-0 | 10 | 0002319128B | 227-0801-0 | 5 | 0302110058G | 227-0401-0 | 3 |
| 0001502104A | 227-1605-0 | 11 | 0001509058A | 227-0723-X | 4 | 0001904525A | 227-0715-0 | 10 | 0002319129D | 227-0801-0 | 7 | 0302110059L | 227-0401-0 | 3 |
| 0001502124C | 227-1314-0 | 3 | 0001509130C | 227-0403-0 | 3 | 0001904525A | 227-0716-0 | 7 | 0002319130E | 227-0801-0 | 8 | 0302110066D | 227-0803-0 | 4 |
| 0001502498F | 227-1308-0 | 22 | 0001509131E | 227-1308-0 | 21 | 0001904525A | 227-0717-0 | 7 | 0002319132L | 227-0801-0 | 50 | 0302110069A | 227-1107-0 | 4 |
| 0001502498F | 227-1309-0 | 40 | 0001509131E | 227-5204-0 | 6 | 0001904525A | 227-5201-0 | 57 | 0002319138C | 227-0801-0 | 6 | 0302110069A | 227-1208-0 | 11 |
| 0001502498F | 227-1320-0 | 18 | 0001509142H | 227-1701-0 | 54 | 0001904558A | 227-0719-0 | 10 | 0002319223C | 227-0801-0 | 13 | 0302110069A | 227-1312-0 | 24 |
| 0001502498F | 227-5203-0 | 7 | 0001509516C | 227-0301-0 | 13 | 0001905059C | 227-0201-0 | 5 | 0002319377L | 227-0801-0 | 10 | 0302110069A | 227-1407-0 | 10 |
| 0001502498F | 227-5204-0 | 7 | 0001509675L | 227-1308-0 | 17 | 0001905059C | 227-0201-1 | 5 | 0002319392A | 227-0801-0 | 51 | 0302110069A | 227-1407-1 | 7 |
| 0001502627A | 227-1412-0 | 1 | 0001509675L | 227-5204-0 | 25 | 0001905059C | 227-0201-5 | 5 | 0002319426D | 227-0801-0 | 21 | 0302110069A | 227-1508-0 | 4 |
| 0001502627A | 227-1423-0 | 15 | 0001509714C | 227-1308-0 | 19 | 0001905059C | 227-0202-0 | 5 | 0002319435C | 227-0801-0 | 14 | 0302110069A | 227-1611-0 | 12 |
| 0001502627A | 227-1424-0 | 15 | 0001509714C | 227-5204-0 | 24 | 0001905059C | 227-0202-5 | 5 | 0002319443L | 227-0801-0 | 11 | 0302110070B | 227-0502-0 | 8 |
| 0001502713C | 227-1701-0 | 31 | 0001900205G | 227-5230-0 | 4 | 0001905059C | 227-0203-0 | 4 | 0002341050C | 227-0801-0 | 12 | 0302110071D | 227-0502-0 | 9 |
| 0001502860D | 227-1201-5 | 25 | 0001900205G | 227-5233-0 | 4 | 0001905110A | 227-1201-5 | 1 | 0002345506F | 227-0801-0 | 9 | 0302110072F | 227-0731-0 | 5 |
| 0001502860D | 227-1600-5 | 1 | 0001900206L | 227-5230-0 | 5 | 0001905110A | 227-1303-5 | 10 | 0002347563H | 227-0801-0 | 17 | 0302110075C | 227-0504-0 | 12 |
| 0001502999L | 227-5201-0 | 31 | 0001900206L | 227-5233-0 | 5 | 0001905110A | 227-1501-X | 18 | 0002400034A | 227-5230-0 | 19 | 0302110075C | 227-0506-0 | 14 |
| 0001502999L | 227-5212-0 | 31 | 0001902055A | 227-0401-0 | 14 | 0001906029A | 227-0403-0 | 4 | 0002400034A | 227-5233-0 | 22 | 0302110080C | 227-0502-0 | 7 |

| Cod. | Tav. | Pos | Cod. | Tav. | Pos. | Cod. | Tav. | Pos. | Cod. | Tav. | Pos. | Cod. | Tav. | Pos. |
|---|---|---|---|---|---|---|---|---|---|---|---|---|---|---|
| 0302110184D | 227-0803-0 | 1 | 0310130604G | 227-1411-X | 8 | 0310830319A | 227-5207-0 | 15 | 0311110301B | 227-0109-0 | 8 | 0311131410H | 227-5212-0 | 46 |
| 0302110185F | 227-0803-0 | 1 | 0310130604G | 227-1425-0 | 8 | 0310830319A | 227-5208-0 | 4 | 0311110305A | 227-0109-0 | 8 | 0311131411A | 227-0714-0 | 19 |
| 0302110186H | 227-0803-0 | 1 | 0310130604G | 227-1506-0 | 3 | 0310830320B | 227-0802-0 | 7 | 0311110307E | 227-0109-0 | 12 | 0311131411A | 227-5201-0 | 62 |
| 0302110187A | 227-0803-0 | 1 | 0310130604G | 227-1609-0 | 5 | 0310830320B | 227-5207-0 | 11 | 0311120116B | 227-0201-1 | 1 | 0311131411A | 227-5212-0 | 53 |
| 0302110188C | 227-0803-0 | 1 | 0310130632F | 227-1201-0 | 4 | 0310830320B | 227-5208-0 | 8 | 0311120217F | 227-0201-1 | 1 | 0311131411A | 227-5213-0 | 53 |
| 0302110192A | 227-0803-0 | 1 | 0310130632F | 227-1201-5 | 4 | 0310830331E | 227-0802-0 | 10 | 0311120840G | 227-0204-0 | 14 | 0311132515C | 227-1411-0 | 8 |
| 0302110195G | 227-0502-0 | 10 | 0310140102D | 227-0724-0 | 2 | 0310830331E | 227-5207-0 | 13 | 0311130105A | 227-1501-X | 26 | 0311132515C | 227-1411-0 | 8 |
| 0302110195G | 227-0503-0 | 8 | 0310140103F | 227-0724-0 | 13 | 0310830331E | 227-5208-0 | 7 | 0311130200B | 227-1103-0 | 14 | 0311132516E | 227-1425-0 | 13 |
| 0302110195G | 227-0507-0 | 5 | 0310140104H | 227-0724-0 | 9 | 0310830332G | 227-0802-0 | 11 | 0311130200B | 227-1504-0 | 14 | 0311132517G | 227-0604-0 | 12 |
| 0302110196L | 227-0803-0 | 1 | 0310140110A | 227-0725-0 | 7 | 0310830332G | 227-5207-0 | 12 | 0311130614A | 227-1201-0 | 17 | 0311132517G | 227-0604-5 | 3 |
| 0302110197B | 227-0803-0 | 1 | 0310140110A | 227-5201-0 | 3 | 0310830332G | 227-5208-0 | 5 | 0311130800E | 227-1203-0 | 8 | 0311132712A | 227-1501-X | 25 |
| 0302110198D | 227-0803-0 | 1 | 0310140110A | 227-5212-0 | 3 | 0310830333L | 227-0802-0 | 12 | 0311130800E | 227-1304-0 | 8 | 0311132716L | 227-1201-5 | 28 |
| 0302110199F | 227-0803-0 | 1 | 0310140110A | 227-5213-0 | 3 | 0310830333L | 227-0802-0 | 16 | 0311130801G | 227-1203-0 | 14 | 0311132716L | 227-1303-5 | 6 |
| 0302110200H | 227-0803-0 | 1 | 0310140226G | 227-0801-0 | 30 | 0310830802E | 227-5207-0 | 9 | 0311130801G | 227-1304-0 | 14 | 0311133220G | 227-1504-0 | 14 |
| 0302110201A | 227-0803-0 | 1 | 0310140231G | 227-0801-0 | 37 | 0310830802E | 227-5208-0 | 10 | 0311130810F | 227-1208-0 | 12 | 0311133510C | 227-1504-0 | 14 |
| 0302110202C | 227-0803-0 | 1 | 0310150017F | 227-0207-0 | 2 | 0310831201A | 227-1625-0 | 14 | 0311130817B | 227-5230-0 | 2 | 0311133707B | 227-1410-0 | 22 |
| 0303041299G | 227-1801-0 | 54 | 0310170019E | 227-0601-0 | 3 | 0310831201A | 227-5207-0 | 26 | 0311130817B | 227-5233-0 | 2 | 0311133708D | 227-1410-0 | 23 |
| 0306330203A | 227-0801-0 | 15 | 0310170028D | 227-0607-0 | 5 | 0310831201A | 227-5208-0 | 18 | 0311131062L | 227-1202-X | 11 | 0311136025G | 227-1203-0 | 7 |
| 0310031017B | 227-1411-0 | 6 | 0310170028D | 227-0608-0 | 5 | 0310831300A | 227-1625-0 | 13 | 0311131069E | 227-1303-5 | 23 | 0311136025G | 227-1304-0 | 7 |
| 0310031018D | 227-1411-X | 16 | 0310170028D | 227-5206-0 | 2 | 0310831300A | 227-5207-0 | 25 | 0311131117G | 227-1311-0 | 9 | 0311136026L | 227-1203-0 | 7 |
| 0310031018D | 227-1426-0 | 3 | 0310180110L | 227-0750-0 | 12 | 0310831300A | 227-5208-0 | 17 | 0311131124B | 227-1303-0 | 3 | 0311136026L | 227-1304-0 | 7 |
| 0310031018D | 227-1427-0 | 3 | 0310180111B | 227-0750-0 | 9 | 0310837401B | 227-5207-0 | 29 | 0311131124B | 227-1303-5 | 8 | 0311136027B | 227-1203-0 | 7 |
| 0310050002C | 227-0601-0 | 16 | 0310180112D | 227-0750-0 | 4 | 0310837401B | 227-5208-0 | 21 | 0311131401L | 227-5201-0 | 9 | 0311136027B | 227-1304-0 | 7 |
| 0310110462A | 227-0803-0 | 7 | 0310180114H | 227-0750-0 | 8 | 0310838300H | 227-5207-0 | 28 | 0311131401L | 227-5212-0 | 9 | 0311136419D | 227-1408-0 | 10 |
| 0310120319A | 227-0802-0 | 4 | 0310180115A | 227-0750-0 | 4 | 0310838300H | 227-5208-0 | 20 | 0311131401L | 227-5213-0 | 9 | 0311136419D | 227-1428-0 | 10 |
| 0310120331E | 227-0802-0 | 4 | 0310190116E | 227-1105-0 | 10 | 0310839363C | 227-0802-0 | 9 | 0311131402B | 227-5201-0 | 13 | 0311136426H | 227-5230-0 | 10 |
| 0310120331E | 227-1626-0 | 17 | 0310190116E | 227-1411-X | 6 | 0310839365G | 227-0802-0 | 7 | 0311131402B | 227-5212-0 | 13 | 0311136426H | 227-5233-0 | 10 |
| 0310120332G | 227-0802-0 | 3 | 0310190116E | 227-1425-0 | 6 | 0310839370G | 227-0802-0 | 10 | 0311131402B | 227-5213-0 | 13 | 0311136427A | 227-1701-0 | 15 |
| 0310120352L | 227-0802-0 | 4 | 0310190116E | 227-1506-0 | 10 | 0310839371L | 227-0802-0 | 11 | 0311131404F | 227-5201-0 | 51 | 0311136427A | 227-5230-0 | 15 |
| 0310120353B | 227-0802-0 | 3 | 0310450901E | 227-0760-0 | 10 | 0310839372B | 227-0802-0 | 12 | 0311131404F | 227-5212-0 | 51 | 0311136427A | 227-5233-0 | 15 |
| 0310130104F | 227-1407-0 | 4 | 0310450901E | 227-0760-K | 10 | 0310839373D | 227-0802-0 | 8 | 0311131404F | 227-5213-0 | 51 | 0311136434E | 227-1105-0 | 10 |
| 0310130203F | 227-1408-0 | 9 | 0310450901E | 227-0760-X | 10 | 0310858102C | 227-1801-0 | 55 | 0311131405H | 227-5201-0 | 47 | 0311136434E | 227-1425-0 | 6 |
| 0310130203F | 227-1428-0 | 9 | 0310450901E | 227-0760-Y | 10 | 0310864701B | 227-0707-0 | 19 | 0311131405H | 227-5212-0 | 47 | 0311136703F | 227-1311-0 | 9 |
| 0310130420F | 227-1103-0 | 20 | 0310450901E | 227-0760-Z | 10 | 0310864701B | 227-0707-5 | 21 | 0311131405H | 227-5213-0 | 47 | 0311136705A | 227-1308-0 | 7 |
| 0310130420F | 227-1203-0 | 30 | 0310830314L | 227-1100-0 | 2 | 0310871309L | 227-1625-0 | 29 | 0311131406A | 227-5201-0 | 32 | 0311140041F | 227-0710-0 | 1 |
| 0310130420F | 227-1304-0 | 30 | 0310830314L | 227-1200-0 | 2 | 0310871310A | 227-1625-0 | 30 | 0311131406A | 227-5212-0 | 32 | 0311140041F | 227-0711-0 | 1 |
| 0310130420F | 227-1504-0 | 20 | 0310830314L | 227-1300-0 | 2 | 0310871311C | 227-1625-0 | 31 | 0311131406A | 227-5213-0 | 32 | 0311150209F | 227-0207-0 | 14 |
| 0310130421H | 227-1103-0 | 19 | 0310830314L | 227-1500-0 | 2 | 0310871500D | 227-1625-0 | 16 | 0311131407C | 227-5201-0 | 28 | 0311160301C | 227-0604-5 | 9 |
| 0310130421H | 227-1203-0 | 29 | 0310830314L | 227-1600-0 | 2 | 0310871501F | 227-5207-0 | 27 | 0311131407C | 227-5212-0 | 28 | 0311160925G | 227-0609-0 | 7 |
| 0310130421H | 227-1304-0 | 29 | 0310830314L | 227-5205-0 | 1 | 0310871501F | 227-5208-0 | 19 | 0311131407C | 227-5213-0 | 28 | 0311161518E | 227-0607-0 | 1 |
| 0310130421H | 227-1504-0 | 21 | 0310830318H | 227-0802-0 | 9 | 0310874023E | 227-1625-0 | 26 | 0311131409G | 227-5201-0 | 34 | 0311175007G | 227-1508-0 | 1 |
| 0310130604G | 227-1105-0 | 3 | 0310830318H | 227-5207-0 | 14 | 0310890302G | 227-1505-0 | 7 | 0311131409G | 227-5212-0 | 34 | 0311175009B | 227-1508-0 | 2 |
| 0310130604G | 227-1205-0 | 4 | 0310830318H | 227-5208-0 | 6 | 0311014101A | 227-1202-X | 14 | 0311131409G | 227-5213-0 | 34 | 0311190400L | 227-1606-0 | 8 |
| 0310130604G | 227-1306-0 | 4 | 0310830319A | 227-0802-0 | 8 | 0311020904C | 227-1701-0 | 26 | 0311131410H | 227-5201-0 | 46 | 0311190402D | 227-1600-5 | 2 |

| Cod. | Tav. | Pos | Cod. | Tav. | Pos. | Cod. | Tav. | Pos. | Cod. | Tav. | Pos. | Cod. | Tav. | Pos. |
|---|---|---|---|---|---|---|---|---|---|---|---|---|---|---|
| 0311190403F | 227-1600-5 | 11 | 0316036400C | 227-1403-0 | 3 | 0316332636C | 227-0721-0 | 11 | 0319013512L | 227-1302-0 | 9 | 0319430407C | 227-1503-0 | 6 |
| 0311190418H | 227-5207-0 | 6 | 0316036400C | 227-1504-0 | 3 | 0316332636C | 227-0723-0 | 11 | 0319013512L | 227-1307-0 | 9 | 0319430409G | 227-1503-0 | 9 |
| 0311190418H | 227-5208-0 | 11 | 0316036400C | 227-1606-0 | 3 | 0316332636C | 227-0723-X | 11 | 0319013512L | 227-1308-0 | 9 | 0319430901A | 227-1405-0 | 10 |
| 0311190421D | 227-5210-0 | 1 | 0316036400C | 227-5207-0 | 19 | 0316332636C | 227-0725-0 | 11 | 0319013512L | 227-1405-0 | 19 | 0319430902C | 227-1105-0 | 4 |
| 0311190422F | 227-5211-0 | 11 | 0316036400C | 227-5208-0 | 3 | 0316332636C | 227-0735-0 | 26 | 0319013512L | 227-1406-0 | 10 | 0319430902C | 227-1506-0 | 4 |
| 0311190423H | 227-5209-0 | 3 | 0316081401A | 227-0727-0 | 3 | 0316332636C | 227-1408-0 | 12 | 0319013512L | 227-1500-0 | 1 | 0319430904G | 227-1105-0 | 13 |
| 0311190424A | 227-5211-0 | 6 | 0316081500A | 227-0727-0 | 2 | 0316332636C | 227-1428-0 | 12 | 0319013512L | 227-1502-0 | 10 | 0319430904G | 227-1205-0 | 5 |
| 0311190425C | 227-5210-0 | 2 | 0316081500A | 227-1411-X | 38 | 0316332636C | 227-5201-0 | 23 | 0319013512L | 227-1507-0 | 10 | 0319430904G | 227-1306-0 | 5 |
| 0311190426E | 227-5211-0 | 12 | 0316081500A | 227-1423-0 | 12 | 0316332636C | 227-5212-0 | 23 | 0319013512L | 227-1600-0 | 1 | 0319430904G | 227-1405-0 | 14 |
| 0311190431E | 227-5206-0 | 4 | 0316081500A | 227-1424-0 | 12 | 0316332636C | 227-5213-0 | 23 | 0319013512L | 227-1601-0 | 9 | 0319430904G | 227-1411-X | 11 |
| 0311190432G | 227-5206-0 | 5 | 0316081600C | 227-0727-0 | 1 | 0316333847B | 227-0760-0 | 9 | 0319013512L | 227-1602-0 | 9 | 0319430904G | 227-1425-0 | 11 |
| 0311190433L | 227-5206-0 | 7 | 0316081600C | 227-1411-X | 39 | 0316333847B | 227-0760-K | 9 | 0319013512L | 227-1603-0 | 9 | 0319430904G | 227-1506-0 | 13 |
| 0311190434B | 227-5206-0 | 6 | 0316081600C | 227-1423-0 | 13 | 0316333847B | 227-0760-X | 9 | 0319013515F | 227-0401-0 | 15 | 0319430904G | 227-1609-0 | 3 |
| 0311190435D | 227-5206-0 | 16 | 0316081600C | 227-1424-0 | 13 | 0316333847B | 227-0760-Y | 9 | 0319014002H | 227-1208-0 | 1 | 0319430912D | 227-1405-0 | 9 |
| 0311190436F | 227-5206-0 | 15 | 0316085500E | 227-0727-0 | 5 | 0316333847B | 227-0760-Z | 9 | 0319014002H | 227-1611-0 | 4 | 0319431135F | 227-1104-0 | 7 |
| 0311190454D | 227-1607-0 | 2 | 0316330019B | 227-5209-0 | 1 | 0316333847B | 227-1301-0 | 13 | 0319014002H | 227-1612-0 | 4 | 0319431135F | 227-1204-0 | 8 |
| 0311190458C | 227-1612-0 | 13 | 0316330019B | 227-5211-0 | 8 | 0316333847B | 227-1608-0 | 5 | 0319014002H | 227-1613-0 | 4 | 0319431135F | 227-1305-0 | 14 |
| 0311190458C | 227-1612-0 | 14 | 0316330020C | 227-0760-0 | 21 | 0316333847B | 227-1801-0 | 50 | 0319014002H | 227-1626-0 | 14 | 0319431135F | 227-1404-0 | 11 |
| 0313122711A | 227-0101-0 | 6 | 0316330020C | 227-0760-K | 21 | 0316341208F | 227-1621-0 | 7 | 0319014002H | 227-5207-0 | 1 | 0319431135F | 227-1505-0 | 7 |
| 0313122711A | 227-0102-0 | 7 | 0316330020C | 227-0760-X | 21 | 0316360045C | 227-1625-0 | 32 | 0319014002H | 227-5208-0 | 13 | 0319431135F | 227-1607-0 | 4 |
| 0316023501B | 227-0601-0 | 15 | 0316330020C | 227-0760-Y | 21 | 0316511003F | 227-0603-0 | 4 | 0319014013B | 227-1317-0 | 15 | 0319431135F | 227-1625-0 | 2 |
| 0316023700D | 227-0207-0 | 9 | 0316330020C | 227-0760-Z | 21 | 0317510822E | 227-1801-0 | 45 | 0319014027B | 227-1701-0 | 13 | 0319431141H | 227-1103-0 | 13 |
| 0316023700D | 227-0601-0 | 2 | 0316330020C | 227-1102-0 | 4 | 0317521504D | 227-1209-0 | 11 | 0319014036A | 227-1317-0 | 19 | 0319431141H | 227-1403-0 | 13 |
| 0316023800F | 227-0207-0 | 8 | 0316330020C | 227-1106-0 | 4 | 0317521504D | 227-1309-0 | 12 | 0319015001G | 227-1701-0 | 13 | 0319431141H | 227-1504-0 | 13 |
| 0316023800F | 227-0601-0 | 1 | 0316330020C | 227-1202-0 | 4 | 0317521504D | 227-1309-1 | 12 | 0319016123G | 227-0721-0 | 12 | 0319431142A | 227-1103-0 | 15 |
| 0316030500H | 227-1105-0 | 2 | 0316330020C | 227-1206-0 | 4 | 0317521504D | 227-1318-0 | 11 | 0319016123G | 227-0723-0 | 12 | 0319431142A | 227-1203-0 | 15 |
| 0316030500H | 227-1205-0 | 3 | 0316330020C | 227-1302-0 | 4 | 0317521504D | 227-1320-0 | 11 | 0319016123G | 227-0723-X | 12 | 0319431142A | 227-1304-0 | 15 |
| 0316030500H | 227-1306-0 | 3 | 0316330020C | 227-1307-0 | 4 | 0317521504D | 227-1501-X | 11 | 0319016123G | 227-0725-0 | 12 | 0319431142A | 227-1403-0 | 15 |
| 0316030500H | 227-1411-X | 7 | 0316330020C | 227-1308-0 | 4 | 0317542101D | 227-1604-0 | 20 | 0319016123G | 227-5201-0 | 22 | 0319431142A | 227-1504-0 | 15 |
| 0316030500H | 227-1425-0 | 7 | 0316330020C | 227-1402-0 | 5 | 0317542103H | 227-5213-0 | 59 | 0319016123G | 227-5212-0 | 22 | 0319431142A | 227-1606-0 | 14 |
| 0316030500H | 227-1506-0 | 2 | 0316330020C | 227-1405-0 | 4 | 0317574624C | 227-1301-0 | 12 | 0319016123G | 227-5213-0 | 22 | 0319431151L | 227-1504-0 | 18 |
| 0316030500H | 227-1609-0 | 4 | 0316330020C | 227-1406-0 | 4 | 0319012100D | 227-1410-0 | 10 | 0319412312H | 227-1624-0 | 1 | 0319431161A | 227-1204-0 | 7 |
| 0316030800E | 227-1205-0 | 8 | 0316330020C | 227-1502-0 | 4 | 0319012600E | 227-0755-0 | 1 | 0319412313A | 227-1624-0 | 4 | 0319431161A | 227-1305-0 | 13 |
| 0316030800E | 227-1306-0 | 8 | 0316330020C | 227-1503-0 | 4 | 0319012600E | 227-1408-0 | 1 | 0319412314C | 227-1624-0 | 22 | 0319431162C | 227-1204-0 | 7 |
| 0316031000H | 227-1105-0 | 7 | 0316330020C | 227-1507-0 | 4 | 0319012600E | 227-1428-0 | 1 | 0319412315E | 227-1624-0 | 7 | 0319431162C | 227-1305-0 | 13 |
| 0316031000H | 227-1205-0 | 10 | 0316330020C | 227-1601-0 | 5 | 0319012600E | 227-1626-0 | 1 | 0319412316G | 227-1624-0 | 21 | 0319431163E | 227-1204-0 | 7 |
| 0316031000H | 227-1306-0 | 10 | 0316330020C | 227-1602-0 | 5 | 0319012601G | 227-1322-0 | 1 | 0319412905G | 227-0707-0 | 20 | 0319431163E | 227-1305-0 | 13 |
| 0316031000H | 227-1411-X | 3 | 0316330020C | 227-1603-0 | 5 | 0319012710H | 227-1208-0 | 1 | 0319412905G | 227-0707-5 | 22 | 0319431164G | 227-1204-0 | 7 |
| 0316031000H | 227-1425-0 | 3 | 0316330020C | 227-1604-0 | 15 | 0319013006F | 227-1410-0 | 17 | 0319430404F | 227-1503-0 | 13 | 0319431164G | 227-1305-0 | 13 |
| 0316031000H | 227-1506-0 | 7 | 0316330020C | 227-1801-0 | 37 | 0319013512L | 227-1100-0 | 1 | 0319430407C | 227-0760-0 | 24 | 0319431166B | 227-1204-0 | 7 |
| 0316031000H | 227-1609-0 | 10 | 0316330020C | 227-5209-0 | 5 | 0319013512L | 227-1106-0 | 10 | 0319430407C | 227-0760-K | 24 | 0319431166B | 227-1305-0 | 13 |
| 0316036400C | 227-1103-0 | 3 | 0316330020C | 227-5211-0 | 4 | 0319013512L | 227-1202-0 | 11 | 0319430407C | 227-0760-X | 24 | 0319431167D | 227-1204-0 | 7 |
| 0316036400C | 227-1203-0 | 3 | 0316332549H | 227-1104-0 | 2 | 0319013512L | 227-1206-0 | 9 | 0319430407C | 227-0760-Y | 24 | 0319431167D | 227-1305-0 | 13 |
| 0316036400C | 227-1304-0 | 3 | 0316332549H | 227-1505-0 | 2 | 0319013512L | 227-1300-0 | 1 | 0319430407C | 227-0760-Z | 24 | 0319431168F | 227-1204-0 | 7 |

| Cod. | Tav. | Pos | Cod. | Tav. | Pos. | Cod. | Tav. | Pos. | Cod. | Tav. | Pos. | Cod. | Tav. | Pos. |
|---|---|---|---|---|---|---|---|---|---|---|---|---|---|---|
| 0319431168F | 227-1305-0 | 13 | 0319433356G | 227-1504-0 | 22 | 0319435713G | 227-1103-0 | 7 | 0319460262A | 227-1626-0 | 3 | 0319480113L | 227-1317-0 | 6 |
| 0319431169H | 227-1204-0 | 7 | 0319433356G | 227-1606-0 | 5 | 0319435713G | 227-1403-0 | 7 | 0319460271L | 227-0755-0 | 4 | 0319480201F | 227-0721-0 | 18 |
| 0319431169H | 227-1305-0 | 13 | 0319433371H | 227-1103-0 | 8 | 0319435713G | 227-1504-0 | 7 | 0319460711D | 227-1612-0 | 12 | 0319480205E | 227-0801-0 | 48 |
| 0319431222A | 227-0755-0 | 2 | 0319433371H | 227-1403-0 | 8 | 0319435714L | 227-1103-0 | 7 | 0319460722G | 227-1612-0 | 14 | 0321042000B | 227-1316-0 | 6 |
| 0319432022G | 227-1600-5 | 10 | 0319433371H | 227-1504-0 | 8 | 0319435714L | 227-1403-0 | 7 | 0319460723L | 227-1612-0 | 13 | 0321370601E | 227-0604-0 | 5 |
| 0319432501D | 227-0802-0 | 3 | 0319433373C | 227-1103-0 | 8 | 0319435714L | 227-1504-0 | 7 | 0319461001H | 227-1613-0 | 14 | 0321370601E | 227-0604-5 | 5 |
| 0319432704E | 227-0730-0 | 17 | 0319433373C | 227-1504-0 | 8 | 0319435715B | 227-1103-0 | 7 | 0319461185H | 227-1204-0 | 3 | 0321420413F | 227-0210-0 | 2 |
| 0319432839B | 227-1624-0 | 12 | 0319433375G | 227-1103-0 | 8 | 0319435715B | 227-1403-0 | 7 | 0319461185H | 227-1305-0 | 11 | 0321420522G | 227-0211-0 | 3 |
| 0319432840C | 227-1624-0 | 13 | 0319433501E | 227-1621-0 | 6 | 0319435715B | 227-1504-0 | 7 | 0319461225D | 227-1313-0 | 7 | 0321420843H | 227-0801-0 | 36 |
| 0319432915C | 227-0760-0 | 15 | 0319433502G | 227-1621-0 | 3 | 0319435716D | 227-1103-0 | 7 | 0319461225D | 227-1314-0 | 15 | 0321910785H | 227-0803-0 | 2 |
| 0319432915C | 227-0760-K | 15 | 0319433800L | 227-1101-0 | 2 | 0319435716D | 227-1403-0 | 7 | 0319461225D | 227-1701-0 | 44 | 0321910788E | 227-1611-0 | 13 |
| 0319432915C | 227-0760-X | 15 | 0319433800L | 227-1501-0 | 2 | 0319435716D | 227-1504-0 | 7 | 0319461226F | 227-1313-0 | 4 | 0321910790H | 227-1208-0 | 8 |
| 0319432915C | 227-0760-Y | 15 | 0319433851G | 227-1101-0 | 1 | 0319435763C | 227-1606-0 | 7 | 0319461226F | 227-1701-0 | 48 | 0321910790H | 227-1407-0 | 8 |
| 0319432915C | 227-0760-Z | 15 | 0319433851G | 227-1501-0 | 1 | 0319435767B | 227-1606-0 | 7 | 0319461227H | 227-1313-0 | 6 | 0321910790H | 227-1407-1 | 5 |
| 0319433001D | 227-0802-0 | 7 | 0319433851G | 227-1501-X | 7 | 0319435775H | 227-1606-0 | 7 | 0319461227H | 227-1314-0 | 14 | 0321910790H | 227-1411-X | 43 |
| 0319433002F | 227-0802-0 | 8 | 0319434106H | 227-5209-0 | 7 | 0319435779G | 227-1606-0 | 7 | 0319461227H | 227-1701-0 | 43 | 0321910791A | 227-1312-0 | 21 |
| 0319433003H | 227-0802-0 | 9 | 0319434140L | 227-5209-0 | 2 | 0319435782C | 227-1103-0 | 7 | 0319461228A | 227-1313-0 | 9 | 0321910791A | 227-1508-0 | 1 |
| 0319433004A | 227-0802-0 | 10 | 0319434402F | 227-1209-0 | 1 | 0319435782C | 227-1403-0 | 7 | 0319461228A | 227-1314-0 | 16 | 0321910792C | 227-1312-0 | 22 |
| 0319433005C | 227-0802-0 | 11 | 0319434402F | 227-1309-0 | 1 | 0319435782C | 227-1504-0 | 7 | 0319461228A | 227-1701-0 | 45 | 0321910792C | 227-1508-0 | 2 |
| 0319433006E | 227-0802-0 | 12 | 0319434402F | 227-1309-1 | 1 | 0319441002F | 227-1101-0 | 3 | 0319461228A | 227-5201-0 | 49 | 0321910793E | 227-1208-0 | 9 |
| 0319433111G | 227-0105-1 | 2 | 0319434402F | 227-1318-0 | 1 | 0319441002F | 227-1401-0 | 2 | 0319461228A | 227-5212-0 | 49 | 0321910793E | 227-1407-0 | 7 |
| 0319433111G | 227-1202-X | 2 | 0319434402F | 227-1501-X | 1 | 0319441002F | 227-1501-0 | 3 | 0319461228A | 227-5213-0 | 49 | 0321910793E | 227-1407-1 | 4 |
| 0319433111G | 227-1309-0 | 34 | 0319434728H | 227-1613-0 | 13 | 0319441002F | 227-1501-X | 27 | 0319461229C | 227-1313-0 | 10 | 0321910794G | 227-1611-0 | 14 |
| 0319433348A | 227-1103-0 | 5 | 0319434729A | 227-1613-0 | 21 | 0319441202A | 227-0707-0 | 10 | 0319461229C | 227-1314-0 | 18 | 0321910795L | 227-0733-0 | 8 |
| 0319433348A | 227-1203-0 | 5 | 0319434729A | 227-1613-X | 2 | 0319441202A | 227-0707-5 | 12 | 0319461229C | 227-1701-0 | 46 | 0321910795L | 227-0803-0 | 5 |
| 0319433348A | 227-1304-0 | 5 | 0319434730B | 227-1409-0 | 6 | 0319441202A | 227-0720-0 | 4 | 0319461230D | 227-1313-0 | 3 | 0321910796B | 227-1107-0 | 1 |
| 0319433348A | 227-1403-0 | 5 | 0319434730B | 227-1613-0 | 2 | 0319441202A | 227-0801-0 | 28 | 0319461230D | 227-1314-0 | 11 | 0321910797D | 227-1107-0 | 2 |
| 0319433348A | 227-1504-0 | 5 | 0319434731D | 227-1613-0 | 23 | 0319441203C | 227-0720-0 | 5 | 0319461230D | 227-1701-0 | 40 | 0321910801C | 227-0301-0 | 3 |
| 0319433348A | 227-1606-0 | 5 | 0319434731D | 227-1613-X | 4 | 0319441203C | 227-0801-0 | 54 | 0319461231F | 227-0207-0 | 13 | 0321910802E | 227-0301-0 | 3 |
| 0319433349C | 227-1103-0 | 4 | 0319434732F | 227-1613-0 | 20 | 0319441207B | 227-0801-0 | 33 | 0319461231F | 227-1313-0 | 2 | 0321910803G | 227-0301-0 | 3 |
| 0319433349C | 227-1203-0 | 4 | 0319434733H | 227-1613-0 | 11 | 0319441226B | 227-0707-0 | 24 | 0319461231F | 227-1314-0 | 12 | 0321910818L | 227-1208-0 | 8 |
| 0319433349C | 227-1304-0 | 4 | 0319434791A | 227-1613-0 | 17 | 0319441227D | 227-0801-0 | 33 | 0319461231F | 227-1701-0 | 41 | 0321910819B | 227-1312-0 | 21 |
| 0319433349C | 227-1403-0 | 4 | 0319435570C | 227-1103-0 | 11 | 0319442923B | 227-0712-0 | 13 | 0319461703H | 227-0755-0 | 12 | 0321910819B | 227-1508-0 | 1 |
| 0319433349C | 227-1504-0 | 4 | 0319435570C | 227-1203-0 | 11 | 0319442923B | 227-0713-0 | 16 | 0319461706E | 227-0755-0 | 19 | 0321920508D | 227-0801-0 | 36 |
| 0319433349C | 227-1606-0 | 4 | 0319435570C | 227-1304-0 | 11 | 0319443106L | 227-0722-0 | 14 | 0319461706E | 227-1626-0 | 6 | 0321930014G | 227-1401-0 | 1 |
| 0319433350D | 227-1103-0 | 4 | 0319435570C | 227-1403-0 | 11 | 0319443106L | 227-0724-0 | 14 | 0319461804C | 227-0755-0 | 11 | 0321930016B | 227-5211-0 | 7 |
| 0319433350D | 227-1203-0 | 4 | 0319435570C | 227-1504-0 | 11 | 0319450147E | 227-0602-0 | 5 | 0319461804C | 227-1626-0 | 9 | 0321930017D | 227-5211-0 | 5 |
| 0319433350D | 227-1304-0 | 4 | 0319435570C | 227-1606-0 | 11 | 0319450147E | 227-0603-0 | 10 | 0319470606D | 227-0721-0 | 17 | 0321930112E | 227-0706-0 | 12 |
| 0319433350D | 227-1403-0 | 4 | 0319435704H | 227-1103-0 | 7 | 0319450149L | 227-0207-0 | 4 | 0319480105C | 227-0728-0 | 5 | 0321930112E | 227-1202-X | 9 |
| 0319433350D | 227-1504-0 | 4 | 0319435704H | 227-1403-0 | 7 | 0319450175D | 227-0601-0 | 4 | 0319480106E | 227-0721-0 | 19 | 0321930112E | 227-1209-0 | 5 |
| 0319433350D | 227-1606-0 | 4 | 0319435704H | 227-1504-0 | 7 | 0319460237H | 227-1410-0 | 15 | 0319480106E | 227-0727-0 | 4 | 0321930112E | 227-1309-0 | 3 |
| 0319433356G | 227-1103-0 | 18 | 0319435710A | 227-1103-0 | 7 | 0319460237H | 227-1611-0 | 5 | 0319480106E | 227-0728-0 | 2 | 0321930112E | 227-1309-1 | 3 |
| 0319433356G | 227-1203-0 | 28 | 0319435710A | 227-1403-0 | 7 | 0319460256H | 227-0755-0 | 18 | 0319480106E | 227-0750-0 | 2 | 0321930112E | 227-1318-0 | 5 |
| 0319433356G | 227-1304-0 | 28 | 0319435710A | 227-1504-0 | 7 | 0319460262A | 227-0755-0 | 3 | 0319480113L | 227-0727-0 | 7 | 0321930112E | 227-1501-X | 5 |

| Cod. | Tav. | Pos | Cod. | Tav. | Pos. | Cod. | Tav. | Pos. | Cod. | Tav. | Pos. | Cod. | Tav. | Pos. |
|---|---|---|---|---|---|---|---|---|---|---|---|---|---|---|
| 0321930112E | 227-1801-0 | 29 | 0321940111E | 227-0719-X | 3 | 0321940803D | 227-0723-X | 7 | 0321941006D | 227-0802-0 | 13 | 0321990051H | 227-1611-0 | 6 |
| 0321930118H | 227-0105-1 | 2 | 0321940125E | 227-0719-0 | 2 | 0321940804F | 227-0721-0 | 13 | 0321941007F | 227-0802-0 | 13 | 0321990051H | 227-1613-0 | 6 |
| 0321930124A | 227-1209-0 | 4 | 0321940125E | 227-0719-X | 2 | 0321940804F | 227-0723-0 | 13 | 0321950122A | 227-0207-0 | 10 | 0321990056L | 227-1612-0 | 5 |
| 0321930124A | 227-1309-0 | 4 | 0321940224E | 227-0704-0 | 1 | 0321940804F | 227-0723-X | 13 | 0321950218E | 227-0601-0 | 5 | 0321990056L | 227-1626-0 | 19 |
| 0321930124A | 227-1309-1 | 4 | 0321940224E | 227-0705-0 | 1 | 0321940804F | 227-0725-0 | 13 | 0321960129H | 227-1314-0 | 10 | 0321990057B | 227-1612-0 | 2 |
| 0321930124A | 227-1318-0 | 4 | 0321940224E | 227-0706-0 | 1 | 0321940804F | 227-5201-0 | 7 | 0321960131B | 227-1314-0 | 9 | 0321990057B | 227-1626-0 | 22 |
| 0321930124A | 227-1501-X | 4 | 0321940227B | 227-0707-0 | 3 | 0321940804F | 227-5212-0 | 7 | 0321960311D | 227-1316-0 | 9 | 0321990058D | 227-1612-0 | 1 |
| 0321930129B | 227-1209-0 | 13 | 0321940227B | 227-0707-5 | 3 | 0321940804F | 227-5213-0 | 7 | 0321960313H | 227-1316-0 | 2 | 0321990058D | 227-1626-0 | 21 |
| 0321930129B | 227-1309-0 | 15 | 0321940227B | 227-0730-0 | 7 | 0321940805H | 227-0721-0 | 2 | 0321960314A | 227-1316-0 | 7 | 0321990059F | 227-1612-0 | 10 |
| 0321930129B | 227-1309-1 | 15 | 0321940235H | 227-0704-0 | 4 | 0321940805H | 227-0723-0 | 2 | 0321960329C | 227-0609-0 | 5 | 0321990060G | 227-1612-0 | 11 |
| 0321930129B | 227-1318-0 | 13 | 0321940235H | 227-0705-0 | 4 | 0321940805H | 227-0725-0 | 2 | 0321960373E | 227-1316-0 | 10 | 0321990063D | 227-1604-0 | 18 |
| 0321930129B | 227-1320-0 | 13 | 0321940235H | 227-0706-0 | 4 | 0321940805H | 227-5201-0 | 26 | 0321960416G | 227-1312-0 | 8 | 0321990064F | 227-1604-0 | 21 |
| 0321930129B | 227-1501-X | 13 | 0321940425B | 227-0101-0 | 19 | 0321940805H | 227-5212-0 | 26 | 0321960416G | 227-1408-0 | 3 | 0321990065H | 227-1604-0 | 19 |
| 0321930303A | 227-1204-0 | 2 | 0321940425B | 227-0102-0 | 20 | 0321940805H | 227-5213-0 | 26 | 0321960416G | 227-1410-0 | 18 | 0321990066A | 227-1604-0 | 16 |
| 0321930303A | 227-1305-0 | 8 | 0321940456G | 227-0502-0 | 3 | 0321940806A | 227-0721-0 | 15 | 0321960416G | 227-1411-0 | 4 | 0321990068E | 227-1612-0 | 15 |
| 0321930305E | 227-1204-0 | 1 | 0321940456G | 227-0503-0 | 4 | 0321940806A | 227-0723-0 | 15 | 0321960416G | 227-1413-0 | 4 | 0321990086C | 227-1606-0 | 13 |
| 0321930305E | 227-1305-0 | 9 | 0321940456G | 227-0504-0 | 4 | 0321940806A | 227-0723-X | 15 | 0321960416G | 227-1428-0 | 3 | 0321990087E | 227-1607-0 | 2 |
| 0321930306G | 227-1204-0 | 1 | 0321940456G | 227-0504-5 | 4 | 0321940806A | 227-0725-0 | 20 | 0321960417L | 227-0755-0 | 2 | 0321990102G | 227-1613-0 | 15 |
| 0321930306G | 227-1305-0 | 9 | 0321940456G | 227-0505-0 | 3 | 0321940806A | 227-5201-0 | 20 | 0321960417L | 227-1626-0 | 2 | 0321990105D | 227-1409-0 | 8 |
| 0321930406L | 227-1319-0 | 1 | 0321940456G | 227-0506-0 | 7 | 0321940806A | 227-5212-0 | 20 | 0321960608E | 227-1409-0 | 5 | 0321990105D | 227-1613-0 | 22 |
| 0321930408D | 227-1319-0 | 5 | 0321940456G | 227-0507-0 | 4 | 0321940806A | 227-5213-0 | 20 | 0321960609G | 227-1409-0 | 3 | 0321990105D | 227-1613-X | 3 |
| 0321930409F | 227-1319-0 | 3 | 0321940493E | 227-0504-0 | 14 | 0321940807C | 227-0721-0 | 8 | 0321960610H | 227-1409-0 | 7 | 0321990106F | 227-1409-0 | 9 |
| 0321930412B | 227-1317-0 | 12 | 0321940493E | 227-0504-5 | 14 | 0321940807C | 227-0723-0 | 8 | 0321960611A | 227-1409-0 | 4 | 0321990106F | 227-1613-0 | 16 |
| 0321930418E | 227-1319-0 | 3 | 0321940493E | 227-0506-0 | 16 | 0321940807C | 227-0723-X | 8 | 0321960612C | 227-0755-0 | 17 | 0321990107H | 227-1613-0 | 12 |
| 0321930419G | 227-1317-0 | 25 | 0321940538B | 227-0707-0 | 25 | 0321940807C | 227-0725-0 | 8 | 0321960613E | 227-0755-0 | 14 | 0321990203B | 227-5207-0 | 10 |
| 0321930421A | 227-1317-0 | 16 | 0321940618B | 227-0109-0 | 6 | 0321940807C | 227-5201-0 | 4 | 0321960703F | 227-1410-0 | 11 | 0321990203B | 227-5208-0 | 9 |
| 0321930439L | 227-1321-0 | 1 | 0321940621G | 227-0109-0 | 5 | 0321940807C | 227-5212-0 | 4 | 0321960706C | 227-1410-0 | 5 | 0321990209E | 227-5211-0 | 1 |
| 0321930441C | 227-1321-0 | 2 | 0321940622L | 227-0109-0 | 7 | 0321940807C | 227-5213-0 | 4 | 0321960707E | 227-1410-0 | 3 | 0321990235L | 227-5206-0 | 19 |
| 0321930442E | 227-1321-0 | 4 | 0321940624D | 227-0109-0 | 11 | 0321940810H | 227-0722-0 | 2 | 0321960708G | 227-1410-0 | 7 | 0321990236B | 227-5207-0 | 24 |
| 0321930443G | 227-1321-0 | 10 | 0321940801L | 227-0721-0 | 10 | 0321940811A | 227-0722-0 | 13 | 0321970121C | 227-0607-0 | 7 | 0321990237D | 227-5206-0 | 20 |
| 0321930444L | 227-1321-0 | 11 | 0321940801L | 227-0723-0 | 10 | 0321940812C | 227-0722-0 | 9 | 0321970121C | 227-0608-0 | 7 | 0321990237D | 227-5207-0 | 23 |
| 0321930448H | 227-1321-0 | 12 | 0321940801L | 227-0723-X | 10 | 0321940813E | 227-0722-0 | 8 | 0321970220C | 227-1613-X | 1 | 0321990238F | 227-5206-0 | 21 |
| 0321930454A | 227-0732-0 | 1 | 0321940801L | 227-0725-0 | 10 | 0321940813E | 227-0724-0 | 8 | 0321970509G | 227-0607-0 | 7 | 0321990239H | 227-5206-0 | 1 |
| 0321930456E | 227-0725-0 | 18 | 0321940801L | 227-5201-0 | 6 | 0321940814G | 227-0722-0 | 7 | 0321990020C | 227-1604-0 | 9 | 0321990240L | 227-5207-0 | 20 |
| 0321930456E | 227-5201-0 | 12 | 0321940801L | 227-5212-0 | 6 | 0321940814G | 227-0724-0 | 7 | 0321990021E | 227-1604-0 | 11 | 0321990241B | 227-5207-0 | 16 |
| 0321930456E | 227-5212-0 | 12 | 0321940801L | 227-5213-0 | 6 | 0321940815L | 227-0722-0 | 1 | 0321990026F | 227-1606-0 | 13 | 0321990243F | 227-5207-0 | 22 |
| 0321930456E | 227-5213-0 | 12 | 0321940802B | 227-0721-0 | 4 | 0321940815L | 227-0724-0 | 1 | 0321990027H | 227-1607-0 | 2 | 0321990244H | 227-5207-0 | 7 |
| 0321930708A | 227-1504-0 | 17 | 0321940802B | 227-0723-0 | 5 | 0321940815L | 227-0801-0 | 58 | 0321990028A | 227-1607-0 | 2 | 0321990245A | 227-5208-0 | 15 |
| 0321930803B | 227-1103-0 | 13 | 0321940802B | 227-0725-0 | 5 | 0321940815L | 227-1404-0 | 5 | 0321990029C | 227-1607-0 | 2 | 0321990251C | 227-5207-0 | 5 |
| 0321930803B | 227-1504-0 | 13 | 0321940802B | 227-5201-0 | 25 | 0321940815L | 227-5202-0 | 11 | 0321990030D | 227-1607-0 | 2 | 0321990252E | 227-5207-0 | 4 |
| 0321940060F | 227-0107-0 | 14 | 0321940802B | 227-5212-0 | 25 | 0321940816B | 227-0722-0 | 6 | 0321990046H | 227-0102-0 | 17 | 0322371108C | 227-0101-0 | 17 |
| 0321940110C | 227-0719-0 | 1 | 0321940802B | 227-5213-0 | 25 | 0321940816B | 227-0724-0 | 6 | 0321990049E | 227-1611-0 | 9 | 0322371108C | 227-0102-0 | 15 |
| 0321940110C | 227-0719-X | 1 | 0321940803D | 227-0721-0 | 3 | 0321940818F | 227-0722-0 | 11 | 0321990049E | 227-1612-0 | 9 | 0322371108C | 227-0105-0 | 8 |
| 0321940111E | 227-0719-0 | 3 | 0321940803D | 227-0723-0 | 7 | 0321940818F | 227-0724-0 | 11 | 0321990049E | 227-1613-0 | 9 | 0322371108C | 227-1201-5 | 16 |

| Cod. | Tav. | Pos | Cod. | Tav. | Pos. | Cod. | Tav. | Pos. | Cod. | Tav. | Pos. | Cod. | Tav. | Pos. |
|---|---|---|---|---|---|---|---|---|---|---|---|---|---|---|
| 0322371108C | 227-1303-5 | 14 | 0322711000D | 227-1103-0 | 8 | 0322720142F | 227-0204-0 | 9 | 0322720440H | 227-0205-0 | 4 | 0322730026C | 227-1403-0 | 7 |
| 0322371108C | 227-1309-0 | 31 | 0322711001F | 227-1203-0 | 8 | 0322720142F | 227-0206-0 | 9 | 0322720441A | 227-0205-0 | 2 | 0322730027E | 227-1203-0 | 7 |
| 0322371108C | 227-1309-1 | 31 | 0322711001F | 227-1304-0 | 8 | 0322720142F | 227-1626-0 | 20 | 0322720442C | 227-0205-0 | 9 | 0322730027E | 227-1304-0 | 7 |
| 0322371108C | 227-1501-X | 33 | 0322711002H | 227-1103-0 | 8 | 0322720143H | 227-0204-0 | 8 | 0322720443E | 227-0205-0 | 8 | 0322730101B | 227-1301-0 | 5 |
| 0322371496E | 227-1317-0 | 22 | 0322711002H | 227-1403-0 | 8 | 0322720143H | 227-0206-0 | 8 | 0322720444G | 227-0205-0 | 1 | 0322730103F | 227-1303-0 | 3 |
| 0322710100E | 227-0101-0 | 4 | 0322711002H | 227-1504-0 | 8 | 0322720144A | 227-0204-0 | 1 | 0322720445L | 227-0205-0 | 6 | 0322730105A | 227-1201-0 | 10 |
| 0322710100E | 227-0102-0 | 11 | 0322712000E | 227-1103-0 | 7 | 0322720144A | 227-0204-X | 14 | 0322720601A | 227-0203-0 | 6 | 0322730105A | 227-1201-5 | 14 |
| 0322710104D | 227-0101-0 | 9 | 0322712000E | 227-1403-0 | 7 | 0322720145C | 227-0204-0 | 6 | 0322720602C | 227-0203-0 | 9 | 0322730105A | 227-1301-0 | 1 |
| 0322710104D | 227-0102-0 | 1 | 0322712000E | 227-1504-0 | 7 | 0322720145C | 227-0204-X | 6 | 0322720603E | 227-0203-0 | 5 | 0322730106C | 227-1201-0 | 10 |
| 0322710106H | 227-0101-0 | 14 | 0322712001G | 227-1103-0 | 7 | 0322720145C | 227-5206-0 | 14 | 0322720604G | 227-0203-0 | 11 | 0322730106C | 227-1201-5 | 14 |
| 0322710106H | 227-0102-0 | 2 | 0322712001G | 227-1403-0 | 7 | 0322720146E | 227-0204-0 | 12 | 0322720605L | 227-0203-0 | 12 | 0322730106C | 227-1301-0 | 1 |
| 0322710107A | 227-0101-0 | 10 | 0322712001G | 227-1504-0 | 7 | 0322720146E | 227-0204-X | 2 | 0322720606B | 227-0203-0 | 14 | 0322730107E | 227-1301-0 | 5 |
| 0322710107A | 227-0102-0 | 6 | 0322712002L | 227-1103-0 | 7 | 0322720146E | 227-0205-0 | 12 | 0322720607D | 227-0203-0 | 15 | 0322730111C | 227-0730-0 | 3 |
| 0322710109E | 227-0101-0 | 2 | 0322712002L | 227-1403-0 | 7 | 0322720146E | 227-0206-0 | 12 | 0322720608F | 227-0203-0 | 2 | 0322730111C | 227-1301-0 | 9 |
| 0322710109E | 227-0102-0 | 13 | 0322712002L | 227-1504-0 | 7 | 0322720146E | 227-5206-0 | 10 | 0322720609H | 227-0203-0 | 1 | 0322730112E | 227-1301-0 | 5 |
| 0322710110F | 227-0730-0 | 6 | 0322712003B | 227-1203-0 | 7 | 0322720181H | 227-0204-X | 5 | 0322720610L | 227-0203-0 | 17 | 0322730115B | 227-1311-0 | 6 |
| 0322710113C | 227-0201-0 | 3 | 0322712003B | 227-1304-0 | 7 | 0322720182A | 227-0204-X | 10 | 0322720612D | 227-0206-0 | 2 | 0322730119A | 227-1316-0 | 5 |
| 0322710113C | 227-0201-5 | 3 | 0322712004D | 227-1203-0 | 7 | 0322720183C | 227-0204-X | 12 | 0322720613F | 227-0206-0 | 4 | 0322730121D | 227-1312-0 | 6 |
| 0322710113C | 227-0202-0 | 3 | 0322712004D | 227-1304-0 | 7 | 0322720184E | 227-0204-X | 7 | 0322720614H | 227-0206-0 | 6 | 0322730123H | 227-1312-0 | 16 |
| 0322710113C | 227-0202-5 | 3 | 0322712005F | 227-1203-0 | 7 | 0322720192B | 227-0201-0 | 2 | 0322720615A | 227-0206-0 | 1 | 0322730123H | 227-1411-0 | 6 |
| 0322710113C | 227-0203-0 | 18 | 0322712005F | 227-1304-0 | 7 | 0322720192B | 227-0201-5 | 2 | 0322720616C | 227-0203-0 | 13 | 0322730125C | 227-1312-0 | 15 |
| 0322710114E | 227-0101-0 | 12 | 0322712006H | 227-1203-0 | 7 | 0322720201B | 227-0210-0 | 3 | 0322720617E | 227-0203-0 | 8 | 0322730127G | 227-1302-0 | 7 |
| 0322710114E | 227-0102-0 | 5 | 0322712006H | 227-1304-0 | 7 | 0322720202D | 227-0210-0 | 1 | 0322720618G | 227-0203-0 | 2 | 0322730129B | 227-1207-0 | 2 |
| 0322710115G | 227-0101-0 | 13 | 0322712007A | 227-1203-0 | 7 | 0322720203F | 227-0210-0 | 1 | 0322720622E | 227-0203-0 | 10 | 0322730129B | 227-1303-0 | 8 |
| 0322710115G | 227-0102-0 | 4 | 0322712007A | 227-1304-0 | 7 | 0322720401F | 227-0201-1 | 10 | 0322720624L | 227-5206-0 | 24 | 0322730133L | 227-1314-0 | 4 |
| 0322710116L | 227-0204-0 | 5 | 0322712008C | 227-1203-0 | 7 | 0322720401F | 227-0202-0 | 10 | 0322720625B | 227-0203-0 | 16 | 0322730135D | 227-1201-0 | 5 |
| 0322710116L | 227-0204-X | 9 | 0322712008C | 227-1304-0 | 7 | 0322720402H | 227-0210-0 | 3 | 0322720626D | 227-5206-0 | 25 | 0322730135D | 227-1201-5 | 5 |
| 0322710116L | 227-0205-0 | 5 | 0322720101L | 227-0201-0 | 10 | 0322720403A | 227-0210-0 | 1 | 0322720701C | 227-0201-5 | 10 | 0322730135D | 227-1303-0 | 4 |
| 0322710116L | 227-0206-0 | 5 | 0322720101L | 227-0201-1 | 10 | 0322720404C | 227-0202-0 | 2 | 0322720702E | 227-0201-5 | 8 | 0322730135D | 227-1303-5 | 9 |
| 0322710116L | 227-5206-0 | 12 | 0322720111A | 227-0201-0 | 4 | 0322720405E | 227-0202-0 | 4 | 0322720703G | 227-0201-5 | 7 | 0322730138A | 227-1305-0 | 4 |
| 0322710117B | 227-0204-0 | 3 | 0322720111A | 227-0201-1 | 4 | 0322720406G | 227-0210-0 | 4 | 0322720711D | 227-0202-5 | 10 | 0322730139C | 227-1305-0 | 5 |
| 0322710117B | 227-0204-X | 1 | 0322720111A | 227-0201-5 | 4 | 0322720411G | 227-0201-1 | 4 | 0322720712F | 227-0202-5 | 8 | 0322730141F | 227-1205-0 | 6 |
| 0322710117B | 227-0205-0 | 3 | 0322720112C | 227-0201-0 | 2 | 0322720411G | 227-0202-0 | 4 | 0322720713H | 227-0202-5 | 7 | 0322730141F | 227-1306-0 | 6 |
| 0322710117B | 227-0206-0 | 3 | 0322720112C | 227-0201-5 | 2 | 0322720411G | 227-0202-5 | 4 | 0322730021B | 227-1203-0 | 7 | 0322730142H | 227-1312-0 | 6 |
| 0322710117B | 227-5206-0 | 8 | 0322720113E | 227-0201-0 | 1 | 0322720412L | 227-0202-0 | 2 | 0322730021B | 227-1304-0 | 7 | 0322730145E | 227-1301-0 | 14 |
| 0322710118D | 227-0101-0 | 14 | 0322720113E | 227-0201-5 | 1 | 0322720412L | 227-0202-5 | 2 | 0322730022D | 227-1203-0 | 7 | 0322730147L | 227-1308-0 | 7 |
| 0322710118D | 227-0102-0 | 2 | 0322720118F | 227-0201-1 | 2 | 0322720413B | 227-0202-0 | 1 | 0322730022D | 227-1304-0 | 7 | 0322730158C | 227-1316-0 | 8 |
| 0322710119F | 227-0101-0 | 10 | 0322720122D | 227-0201-0 | 8 | 0322720413B | 227-0202-5 | 1 | 0322730023F | 227-1203-0 | 7 | 0322730158C | 227-5202-0 | 12 |
| 0322710119F | 227-0102-0 | 6 | 0322720122D | 227-0201-1 | 8 | 0322720422A | 227-0201-1 | 8 | 0322730023F | 227-1304-0 | 7 | 0322730160F | 227-1203-0 | 8 |
| 0322710120G | 227-0730-0 | 6 | 0322720125A | 227-0201-0 | 7 | 0322720422A | 227-0202-0 | 8 | 0322730024H | 227-1203-0 | 7 | 0322730160F | 227-1304-0 | 8 |
| 0322710122B | 227-1501-X | 39 | 0322720125A | 227-0201-1 | 7 | 0322720423C | 227-0201-1 | 2 | 0322730024H | 227-1304-0 | 7 | 0322730161H | 227-1203-0 | 13 |
| 0322710123D | 227-0201-1 | 3 | 0322720126C | 227-0201-1 | 11 | 0322720424E | 227-0201-1 | 11 | 0322730025A | 227-1203-0 | 7 | 0322730161H | 227-1304-0 | 13 |
| 0322710271G | 227-0105-1 | 1 | 0322720140B | 227-0204-0 | 4 | 0322720425G | 227-0201-1 | 7 | 0322730025A | 227-1304-0 | 7 | 0322730162A | 227-1203-0 | 14 |
| 0322710271G | 227-1309-0 | 33 | 0322720141D | 227-0204-0 | 2 | 0322720425G | 227-0202-0 | 7 | 0322730026C | 227-1103-0 | 7 | 0322730162A | 227-1304-0 | 14 |

| Cod. | Tav. | Pos | Cod. | Tav. | Pos. | Cod. | Tav. | Pos. | Cod. | Tav. | Pos. | Cod. | Tav. | Pos. |
|---|---|---|---|---|---|---|---|---|---|---|---|---|---|---|
| 0322730163C | 227-1312-0 | 9 | 0322730176A | 227-1404-0 | 8 | 0322730316H | 227-1504-0 | 19 | 0322730627H | 227-1413-0 | 2 | 0322730709C | 227-1423-0 | 2 |
| 0322730163C | 227-1411-0 | 3 | 0322730176A | 227-1505-0 | 4 | 0322730318C | 227-1501-X | 41 | 0322730628A | 227-1411-0 | 1 | 0322730711F | 227-1405-0 | 7 |
| 0322730163C | 227-1413-0 | 3 | 0322730177C | 227-1104-0 | 4 | 0322730319E | 227-1503-0 | 7 | 0322730628A | 227-1413-0 | 1 | 0322730712H | 227-1411-X | 25 |
| 0322730164E | 227-1312-0 | 1 | 0322730177C | 227-1404-0 | 8 | 0322730508F | 227-1411-0 | 4 | 0322730629C | 227-1407-0 | 3 | 0322730712H | 227-1412-0 | 15 |
| 0322730165G | 227-1316-0 | 8 | 0322730177C | 227-1505-0 | 4 | 0322730508F | 227-1413-0 | 4 | 0322730629C | 227-1407-1 | 3 | 0322730712H | 227-1423-0 | 1 |
| 0322730166L | 227-1316-0 | 8 | 0322730178E | 227-1104-0 | 4 | 0322730511B | 227-1428-0 | 2 | 0322730629C | 227-1411-X | 21 | 0322730713A | 227-1411-X | 40 |
| 0322730167B | 227-1207-0 | 1 | 0322730178E | 227-1404-0 | 8 | 0322730512D | 227-1428-0 | 14 | 0322730634C | 227-1413-0 | 6 | 0322730713A | 227-1412-0 | 16 |
| 0322730167B | 227-1303-0 | 7 | 0322730178E | 227-1505-0 | 4 | 0322730589G | 227-1413-0 | 8 | 0322730635E | 227-1413-0 | 7 | 0322730713A | 227-1424-0 | 2 |
| 0322730168D | 227-1315-0 | 4 | 0322730179G | 227-1104-0 | 4 | 0322730600A | 227-1407-0 | 2 | 0322730636G | 227-1413-0 | 8 | 0322730714C | 227-1412-0 | 8 |
| 0322730169F | 227-1201-0 | 12 | 0322730179G | 227-1404-0 | 8 | 0322730602E | 227-1408-0 | 7 | 0322730646H | 227-1408-X | 1 | 0322730714C | 227-1424-0 | 19 |
| 0322730169F | 227-1201-5 | 12 | 0322730179G | 227-1505-0 | 4 | 0322730602E | 227-1410-0 | 16 | 0322730648C | 227-1408-X | 2 | 0322730715E | 227-1411-X | 41 |
| 0322730169F | 227-1301-0 | 3 | 0322730180H | 227-1203-0 | 7 | 0322730603G | 227-1408-0 | 8 | 0322730650F | 227-1408-X | 3 | 0322730715E | 227-1412-0 | 16 |
| 0322730171L | 227-1106-0 | 6 | 0322730180H | 227-1304-0 | 7 | 0322730603G | 227-1428-0 | 8 | 0322730651H | 227-1411-0 | 10 | 0322730715E | 227-1424-0 | 1 |
| 0322730171L | 227-1202-0 | 6 | 0322730181A | 227-1314-0 | 5 | 0322730604L | 227-1408-0 | 4 | 0322730652A | 227-1411-0 | 9 | 0322730718B | 227-1411-X | 37 |
| 0322730171L | 227-1206-0 | 6 | 0322730183E | 227-1203-0 | 7 | 0322730604L | 227-1428-0 | 4 | 0322730653C | 227-1407-0 | 2 | 0322730718B | 227-1423-0 | 11 |
| 0322730171L | 227-1207-0 | 5 | 0322730183E | 227-1304-0 | 7 | 0322730605B | 227-1408-0 | 5 | 0322730654E | 227-1312-0 | 17 | 0322730718B | 227-1424-0 | 11 |
| 0322730171L | 227-1302-0 | 6 | 0322730185L | 227-1312-0 | 7 | 0322730605B | 227-1428-0 | 5 | 0322730658D | 227-1501-X | 15 | 0322730719D | 227-1411-X | 34 |
| 0322730171L | 227-1307-0 | 6 | 0322730186B | 227-1311-0 | 7 | 0322730607F | 227-1408-0 | 10 | 0322730661L | 227-1410-0 | 14 | 0322730719D | 227-1423-0 | 10 |
| 0322730171L | 227-1308-0 | 6 | 0322730187D | 227-1301-0 | 4 | 0322730607F | 227-1428-0 | 10 | 0322730662B | 227-1410-0 | 12 | 0322730719D | 227-1424-0 | 10 |
| 0322730171L | 227-1310-0 | 5 | 0322730188F | 227-1301-0 | 8 | 0322730608H | 227-1408-0 | 2 | 0322730663D | 227-1410-0 | 9 | 0322730721G | 227-1411-X | 31 |
| 0322730171L | 227-1311-0 | 5 | 0322730190L | 227-1312-0 | 10 | 0322730608H | 227-1410-0 | 19 | 0322730664F | 227-1408-X | 5 | 0322730721G | 227-1423-0 | 7 |
| 0322730171L | 227-1405-0 | 6 | 0322730190L | 227-1314-0 | 7 | 0322730610B | 227-1312-0 | 17 | 0322730665H | 227-1408-X | 4 | 0322730721G | 227-1424-0 | 7 |
| 0322730171L | 227-1406-0 | 7 | 0322730192D | 227-1312-0 | 18 | 0322730610B | 227-1411-0 | 7 | 0322730666A | 227-1413-0 | 6 | 0322730722L | 227-1411-X | 27 |
| 0322730171L | 227-1411-X | 19 | 0322730194H | 227-1315-0 | 2 | 0322730612F | 227-1411-0 | 9 | 0322730681B | 227-1409-0 | 2 | 0322730722L | 227-1423-0 | 3 |
| 0322730171L | 227-1426-0 | 7 | 0322730195A | 227-1312-0 | 15 | 0322730612F | 227-1413-0 | 2 | 0322730702G | 227-1411-X | 28 | 0322730722L | 227-1424-0 | 3 |
| 0322730171L | 227-1427-0 | 7 | 0322730196C | 227-1303-0 | 5 | 0322730613H | 227-1312-0 | 14 | 0322730702G | 227-1412-0 | 7 | 0322730723B | 227-1407-1 | 2 |
| 0322730171L | 227-1502-0 | 6 | 0322730197E | 227-1303-0 | 5 | 0322730613H | 227-1411-0 | 8 | 0322730702G | 227-1423-0 | 4 | 0322730723B | 227-1411-X | 22 |
| 0322730171L | 227-1507-0 | 6 | 0322730198G | 227-1411-0 | 6 | 0322730613H | 227-1412-0 | 6 | 0322730702G | 227-1424-0 | 4 | 0322730724D | 227-1423-0 | 21 |
| 0322730171L | 227-1601-0 | 6 | 0322730199L | 227-1411-0 | 6 | 0322730613H | 227-1423-0 | 19 | 0322730703L | 227-1412-0 | 10 | 0322730725F | 227-1428-0 | 7 |
| 0322730171L | 227-1602-0 | 6 | 0322730302H | 227-1103-0 | 14 | 0322730613H | 227-1424-0 | 20 | 0322730704B | 227-1411-X | 36 | 0322730726H | 227-1422-0 | 1 |
| 0322730171L | 227-1603-0 | 6 | 0322730302H | 227-1504-0 | 14 | 0322730615C | 227-1405-0 | 15 | 0322730704B | 227-1412-0 | 13 | 0322730727A | 227-1407-1 | 9 |
| 0322730172B | 227-1104-0 | 4 | 0322730305E | 227-1102-0 | 5 | 0322730615C | 227-1411-X | 13 | 0322730704B | 227-1423-0 | 18 | 0322730728C | 227-1411-X | 35 |
| 0322730172B | 227-1404-0 | 8 | 0322730306G | 227-1503-0 | 7 | 0322730615C | 227-1425-0 | 13 | 0322730704B | 227-1424-0 | 18 | 0322730728C | 227-1423-0 | 14 |
| 0322730172B | 227-1505-0 | 4 | 0322730307L | 227-1104-0 | 2 | 0322730616E | 227-1401-0 | 3 | 0322730705D | 227-1412-0 | 4 | 0322730728C | 227-1424-0 | 14 |
| 0322730173D | 227-1104-0 | 4 | 0322730307L | 227-1505-0 | 2 | 0322730618L | 227-1404-0 | 4 | 0322730705D | 227-1423-0 | 17 | 0322730731H | 227-1411-X | 29 |
| 0322730173D | 227-1404-0 | 8 | 0322730310E | 227-1103-0 | 17 | 0322730619B | 227-1404-0 | 3 | 0322730705D | 227-1424-0 | 17 | 0322730732A | 227-1423-0 | 20 |
| 0322730173D | 227-1505-0 | 4 | 0322730311G | 227-1103-0 | 17 | 0322730620C | 227-1403-0 | 14 | 0322730706F | 227-1412-0 | 3 | 0322730738D | 227-1407-1 | 2 |
| 0322730174F | 227-1104-0 | 4 | 0322730311G | 227-1403-0 | 17 | 0322730621E | 227-1402-0 | 6 | 0322730706F | 227-1423-0 | 14 | 0322730739F | 227-1423-0 | 2 |
| 0322730174F | 227-1404-0 | 8 | 0322730311G | 227-1504-0 | 19 | 0322730625D | 227-1106-0 | 7 | 0322730706F | 227-1424-0 | 14 | 0322730900G | 227-1314-0 | 4 |
| 0322730174F | 227-1505-0 | 4 | 0322730312L | 227-1501-X | 29 | 0322730625D | 227-1406-0 | 6 | 0322730708A | 227-1412-0 | 8 | 0322730901L | 227-5202-0 | 1 |
| 0322730175H | 227-1104-0 | 4 | 0322730313B | 227-1501-X | 35 | 0322730625D | 227-1502-0 | 7 | 0322730708A | 227-1423-0 | 5 | 0322730902B | 227-5202-0 | 2 |
| 0322730175H | 227-1404-0 | 8 | 0322730314D | 227-1501-X | 26 | 0322730625D | 227-1507-0 | 7 | 0322730708A | 227-1424-0 | 5 | 0322730903D | 227-5202-0 | 3 |
| 0322730175H | 227-1505-0 | 4 | 0322730315F | 227-1501-X | 40 | 0322730627H | 227-1411-0 | 2 | 0322730709C | 227-1411-X | 26 | 0322730904F | 227-5202-0 | 4 |
| 0322730176A | 227-1104-0 | 4 | 0322730316H | 227-1403-0 | 17 | 0322730627H | 227-1411-0 | 9 | 0322730709C | 227-1412-0 | 5 | 0322730905H | 227-5202-0 | 5 |

| Cod. | Tav. | Pos | Cod. | Tav. | Pos. | Cod. | Tav. | Pos. | Cod. | Tav. | Pos. | Cod. | Tav. | Pos. |
|---|---|---|---|---|---|---|---|---|---|---|---|---|---|---|
| 0322730906A | 227-1312-0 | 17 | 0322731103G | 227-1304-0 | 19 | 0322732072B | 227-1203-0 | 22 | 0322732230G | 227-0770-0 | 1 | 0322740048B | 227-0707-0 | 14 |
| 0322730907C | 227-1408-0 | 10 | 0322731192E | 227-1202-X | 17 | 0322732072B | 227-1304-0 | 22 | 0322732231L | 227-0770-0 | 23 | 0322740048B | 227-0707-5 | 16 |
| 0322730907C | 227-1428-0 | 10 | 0322731212H | 227-1208-0 | 3 | 0322732073D | 227-1203-0 | 22 | 0322740010A | 227-0107-0 | 7 | 0322740048B | 227-0714-0 | 5 |
| 0322730908E | 227-1408-0 | 10 | 0322731213A | 227-1208-0 | 7 | 0322732073D | 227-1304-0 | 22 | 0322740010A | 227-0107-5 | 7 | 0322740049D | 227-0707-0 | 16 |
| 0322730911A | 227-5202-0 | 6 | 0322731214C | 227-1208-0 | 6 | 0322732074F | 227-1203-0 | 22 | 0322740010A | 227-0710-0 | 6 | 0322740049D | 227-0707-5 | 18 |
| 0322730912C | 227-5202-0 | 7 | 0322731401L | 227-1202-X | 1 | 0322732074F | 227-1304-0 | 22 | 0322740010A | 227-0711-0 | 6 | 0322740051G | 227-0603-X | 2 |
| 0322730913E | 227-5202-0 | 8 | 0322732001B | 227-0104-0 | 4 | 0322732204C | 227-0770-0 | 15 | 0322740010A | 227-0712-0 | 6 | 0322740051G | 227-0707-0 | 14 |
| 0322730914G | 227-5202-0 | 9 | 0322732001B | 227-1309-0 | 25 | 0322732204C | 227-5203-0 | 15 | 0322740010A | 227-0713-0 | 6 | 0322740082C | 227-0107-5 | 1 |
| 0322730915L | 227-5202-0 | 10 | 0322732001B | 227-1309-1 | 25 | 0322732204C | 227-5204-0 | 15 | 0322740011C | 227-0710-0 | 1 | 0322740083E | 227-0107-5 | 1 |
| 0322731002C | 227-1202-X | 24 | 0322732002D | 227-0103-0 | 1 | 0322732205E | 227-0770-0 | 19 | 0322740011C | 227-0711-0 | 1 | 0322740084G | 227-0109-0 | 12 |
| 0322731011B | 227-1201-0 | 7 | 0322732002D | 227-0106-0 | 1 | 0322732205E | 227-5203-0 | 19 | 0322740012E | 227-0107-0 | 8 | 0322740100B | 227-0735-0 | 2 |
| 0322731012D | 227-1201-0 | 3 | 0322732002D | 227-1309-0 | 21 | 0322732205E | 227-5204-0 | 19 | 0322740012E | 227-0107-5 | 8 | 0322740101D | 227-0735-0 | 14 |
| 0322731016C | 227-1201-0 | 6 | 0322732002D | 227-1309-1 | 21 | 0322732206G | 227-0770-0 | 11 | 0322740012E | 227-0711-0 | 13 | 0322740102F | 227-0735-0 | 6 |
| 0322731016C | 227-1201-5 | 6 | 0322732003F | 227-1309-0 | 8 | 0322732206G | 227-5203-0 | 11 | 0322740012E | 227-0713-0 | 13 | 0322740102F | 227-0736-0 | 10 |
| 0322731017E | 227-1201-0 | 7 | 0322732003F | 227-1309-1 | 8 | 0322732206G | 227-5204-0 | 11 | 0322740012E | 227-0714-0 | 15 | 0322740102F | 227-0740-0 | 4 |
| 0322731021C | 227-1203-0 | 21 | 0322732003F | 227-1319-0 | 21 | 0322732207L | 227-5203-0 | 21 | 0322740012E | 227-0715-0 | 13 | 0322740103H | 227-0735-0 | 11 |
| 0322731021C | 227-1304-0 | 21 | 0322732004H | 227-1309-0 | 18 | 0322732207L | 227-5204-0 | 21 | 0322740012E | 227-0717-0 | 13 | 0322740104A | 227-0736-0 | 11 |
| 0322731022E | 227-1201-5 | 9 | 0322732004H | 227-1309-0 | 18 | 0322732208B | 227-1316-0 | 12 | 0322740012E | 227-5201-0 | 67 | 0322740106E | 227-0735-0 | 13 |
| 0322731022E | 227-1303-5 | 6 | 0322732004H | 227-1309-1 | 18 | 0322732208B | 227-5203-0 | 1 | 0322740013G | 227-0719-0 | 7 | 0322740110C | 227-0735-0 | 19 |
| 0322731023G | 227-1201-5 | 10 | 0322732004H | 227-1309-1 | 18 | 0322732208B | 227-5204-0 | 1 | 0322740013G | 227-0719-X | 7 | 0322740111E | 227-0735-0 | 22 |
| 0322731023G | 227-1303-5 | 1 | 0322732004H | 227-1320-0 | 14 | 0322732209D | 227-1316-0 | 8 | 0322740015B | 227-0720-0 | 3 | 0322740112G | 227-0735-0 | 25 |
| 0322731023G | 227-1501-X | 24 | 0322732006C | 227-1301-0 | 7 | 0322732209D | 227-5203-0 | 10 | 0322740015B | 227-0723-X | 2 | 0322740113L | 227-0735-0 | 27 |
| 0322731024L | 227-1201-5 | 18 | 0322732007E | 227-1301-0 | 15 | 0322732209D | 227-5204-0 | 10 | 0322740015B | 227-0801-0 | 52 | 0322740114B | 227-0735-0 | 29 |
| 0322731024L | 227-1303-5 | 11 | 0322732009L | 227-1303-5 | 8 | 0322732213B | 227-0770-0 | 2 | 0322740018H | 227-0710-0 | 13 | 0322740127L | 227-0705-0 | 12 |
| 0322731024L | 227-1501-X | 17 | 0322732011C | 227-1303-0 | 3 | 0322732213B | 227-5203-0 | 2 | 0322740018H | 227-0712-0 | 1 | 0322740135F | 227-0704-0 | 9 |
| 0322731025B | 227-1201-0 | 3 | 0322732013G | 227-1301-0 | 17 | 0322732213B | 227-5204-0 | 2 | 0322740018H | 227-0713-0 | 1 | 0322740135F | 227-0705-0 | 9 |
| 0322731026D | 227-1201-0 | 14 | 0322732014L | 227-0105-0 | 4 | 0322732214D | 227-0770-0 | 3 | 0322740018H | 227-0714-0 | 1 | 0322740137A | 227-0703-0 | 3 |
| 0322731026D | 227-1303-0 | 11 | 0322732014L | 227-1309-0 | 28 | 0322732214D | 227-5203-0 | 3 | 0322740018H | 227-0715-0 | 1 | 0322740138C | 227-0703-0 | 6 |
| 0322731027F | 227-1203-0 | 20 | 0322732014L | 227-1309-1 | 28 | 0322732214D | 227-5204-0 | 3 | 0322740023H | 227-0707-0 | 7 | 0322740140F | 227-0520-0 | 4 |
| 0322731027F | 227-1304-0 | 20 | 0322732015B | 227-1209-0 | 8 | 0322732215F | 227-0770-0 | 18 | 0322740023H | 227-0707-5 | 7 | 0322740142A | 227-0704-0 | 10 |
| 0322731028H | 227-1201-5 | 15 | 0322732015B | 227-1318-0 | 8 | 0322732215F | 227-5203-0 | 18 | 0322740024A | 227-0707-0 | 5 | 0322740142A | 227-0705-0 | 10 |
| 0322731028H | 227-1303-5 | 15 | 0322732016D | 227-1312-0 | 15 | 0322732215F | 227-5204-0 | 18 | 0322740024A | 227-0707-5 | 5 | 0322740142A | 227-0706-0 | 10 |
| 0322731029A | 227-1201-5 | 3 | 0322732017F | 227-1312-0 | 15 | 0322732218C | 227-1316-0 | 7 | 0322740027G | 227-0760-X | 1 | 0322740142A | 227-1105-0 | 14 |
| 0322731029A | 227-1303-5 | 2 | 0322732019A | 227-1202-X | 6 | 0322732219E | 227-1316-0 | 8 | 0322740027G | 227-0760-Y | 1 | 0322740142A | 227-1506-0 | 14 |
| 0322731029A | 227-1501-X | 23 | 0322732019A | 227-1301-0 | 17 | 0322732222A | 227-1408-0 | 13 | 0322740027G | 227-0760-Z | 1 | 0322740144E | 227-0730-0 | 10 |
| 0322731030B | 227-1201-5 | 7 | 0322732019A | 227-1309-0 | 36 | 0322732223C | 227-1308-0 | 13 | 0322740032G | 227-0107-0 | 5 | 0322740147B | 227-0704-0 | 9 |
| 0322731031D | 227-1201-5 | 7 | 0322732021D | 227-1305-0 | 16 | 0322732223C | 227-5204-0 | 28 | 0322740034B | 227-0709-0 | 9 | 0322740147B | 227-0705-0 | 9 |
| 0322731032F | 227-1201-0 | 7 | 0322732031E | 227-1319-0 | 16 | 0322732224E | 227-1308-0 | 11 | 0322740035D | 227-0740-0 | 7 | 0322740148D | 227-0703-0 | 6 |
| 0322731033H | 227-1201-0 | 7 | 0322732034B | 227-1319-0 | 18 | 0322732224E | 227-5204-0 | 26 | 0322740036F | 227-0740-0 | 9 | 0322740148D | 227-0703-X | 22 |
| 0322731034A | 227-1203-0 | 26 | 0322732035D | 227-1319-0 | 2 | 0322732225G | 227-1308-0 | 14 | 0322740037H | 227-0741-0 | 1 | 0322740166B | 227-0703-X | 22 |
| 0322731035C | 227-1201-5 | 7 | 0322732042H | 227-1321-0 | 8 | 0322732225G | 227-5204-0 | 29 | 0322740038A | 227-0741-0 | 3 | 0322740261C | 227-0716-0 | 12 |
| 0322731037G | 227-1201-5 | 7 | 0322732043A | 227-1301-0 | 21 | 0322732226L | 227-1308-0 | 16 | 0322740042H | 227-0728-0 | 4 | 0322740261C | 227-0717-0 | 12 |
| 0322731102E | 227-1202-0 | 7 | 0322732056H | 227-1320-0 | 5 | 0322732226L | 227-5204-0 | 30 | 0322740047L | 227-0707-0 | 10 | 0322740261C | 227-5201-0 | 63 |
| 0322731103G | 227-1203-0 | 19 | 0322732057A | 227-1320-0 | 2 | 0322732229F | 227-1408-0 | 13 | 0322740047L | 227-0707-5 | 12 | 0322740262E | 227-0718-0 | 10 |

| Cod. | Tav. | Pos | Cod. | Tav. | Pos. | Cod. | Tav. | Pos. | Cod. | Tav. | Pos. | Cod. | Tav. | Pos. |
|---|---|---|---|---|---|---|---|---|---|---|---|---|---|---|
| 0322740262E | 227-5201-0 | 72 | 0322740808E | 227-0760-0 | 16 | 0322740824H | 227-0760-0 | 35 | 0322760104E | 227-0605-0 | 1 | 0322760173A | 227-0604-0 | 1 |
| 0322740263G | 227-0718-0 | 4 | 0322740808E | 227-0760-K | 16 | 0322740901B | 227-0712-0 | 1 | 0322760105G | 227-0601-0 | 11 | 0322760173A | 227-0604-5 | 1 |
| 0322740263G | 227-5201-0 | 78 | 0322740808E | 227-0760-X | 16 | 0322740901B | 227-0713-0 | 1 | 0322760106L | 227-0601-0 | 7 | 0322760174C | 227-0607-0 | 1 |
| 0322740264L | 227-0718-0 | 6 | 0322740808E | 227-0760-Y | 16 | 0322740902D | 227-0712-0 | 13 | 0322760107B | 227-0602-0 | 2 | 0322760175E | 227-0604-5 | 2 |
| 0322740264L | 227-5201-0 | 76 | 0322740808E | 227-0760-Z | 16 | 0322740902D | 227-0713-0 | 16 | 0322760108D | 227-0602-0 | 2 | 0322760177L | 227-0603-0 | 11 |
| 0322740265B | 227-0718-0 | 5 | 0322740809G | 227-0760-0 | 5 | 0322740921D | 227-1322-0 | 4 | 0322760109F | 227-0604-0 | 2 | 0322760181G | 227-0204-X | 17 |
| 0322740265B | 227-5201-0 | 77 | 0322740809G | 227-0760-K | 5 | 0322740924A | 227-1322-0 | 9 | 0322760109F | 227-0604-5 | 6 | 0322760182L | 227-0603-0 | 2 |
| 0322740266D | 227-0718-0 | 11 | 0322740809G | 227-0760-X | 5 | 0322741001C | 227-1801-0 | 41 | 0322760109F | 227-0605-0 | 5 | 0322760183B | 227-0603-X | 5 |
| 0322740266D | 227-5201-0 | 71 | 0322740809G | 227-0760-Y | 5 | 0322741002E | 227-1801-0 | 40 | 0322760110G | 227-0604-0 | 3 | 0322760185F | 227-0603-X | 9 |
| 0322740267F | 227-0718-0 | 1 | 0322740809G | 227-0760-Z | 5 | 0322741004L | 227-1801-0 | 42 | 0322760110G | 227-0604-5 | 7 | 0322760188C | 227-0602-0 | 2 |
| 0322740267F | 227-5201-0 | 81 | 0322740810H | 227-0760-0 | 12 | 0322741010B | 227-1801-0 | 49 | 0322760110G | 227-0605-0 | 4 | 0322760190F | 227-1314-0 | 19 |
| 0322740268H | 227-0718-0 | 7 | 0322740810H | 227-0760-K | 12 | 0322741011D | 227-1801-0 | 34 | 0322760111L | 227-0603-0 | 2 | 0322760191H | 227-0602-0 | 6 |
| 0322740268H | 227-5201-0 | 75 | 0322740810H | 227-0760-X | 12 | 0322741012F | 227-1801-0 | 30 | 0322760112B | 227-0603-0 | 2 | 0322760194E | 227-5206-0 | 4 |
| 0322740313D | 227-0603-X | 3 | 0322740810H | 227-0760-Y | 12 | 0322741013H | 227-1801-0 | 39 | 0322760113D | 227-0603-0 | 7 | 0322760196L | 227-0602-0 | 6 |
| 0322740422E | 227-0704-0 | 9 | 0322740810H | 227-0760-Z | 12 | 0322741015C | 227-1801-0 | 48 | 0322760114F | 227-0603-0 | 5 | 0322760199F | 227-0602-0 | 6 |
| 0322740422E | 227-0706-0 | 9 | 0322740811A | 227-0760-0 | 11 | 0322741016E | 227-1801-0 | 46 | 0322760115H | 227-0603-0 | 2 | 0322760501G | 227-0609-0 | 3 |
| 0322740423G | 227-0704-0 | 9 | 0322740811A | 227-0760-K | 11 | 0322741024B | 227-1801-0 | 2 | 0322760116A | 227-0602-0 | 2 | 0322760502L | 227-0609-0 | 2 |
| 0322740423G | 227-0706-0 | 9 | 0322740811A | 227-0760-X | 11 | 0322741029C | 227-1801-0 | 15 | 0322760118E | 227-0604-0 | 9 | 0322760504D | 227-0609-0 | 8 |
| 0322740522G | 227-0750-0 | 7 | 0322740811A | 227-0760-Y | 11 | 0322741030D | 227-1801-0 | 23 | 0322760120H | 227-0607-0 | 1 | 0322760511H | 227-0611-0 | 5 |
| 0322740523L | 227-0750-0 | 5 | 0322740811A | 227-0760-Z | 11 | 0322741031F | 227-1801-0 | 21 | 0322760120H | 227-0608-0 | 1 | 0322760514E | 227-0611-0 | 4 |
| 0322740525D | 227-0750-0 | 16 | 0322740812C | 227-0707-0 | 11 | 0322741032H | 227-1801-0 | 14 | 0322760121A | 227-0204-X | 16 | 0322760515G | 227-0611-0 | 5 |
| 0322740527H | 227-0750-0 | 17 | 0322740812C | 227-0707-5 | 13 | 0322741033A | 227-1801-0 | 17 | 0322760121A | 227-0607-0 | 3 | 0322770109H | 227-0502-0 | 13 |
| 0322740701G | 227-0736-0 | 5 | 0322740812C | 227-0760-K | 38 | 0322741531G | 227-0703-0 | 3 | 0322760122C | 227-0204-X | 13 | 0322770113F | 227-0502-0 | 5 |
| 0322740702L | 227-0736-0 | 4 | 0322740813E | 227-0760-0 | 7 | 0322741531G | 227-0703-X | 22 | 0322760122C | 227-0607-0 | 6 | 0322770113F | 227-0503-0 | 7 |
| 0322740804F | 227-0760-0 | 2 | 0322740813E | 227-0760-K | 7 | 0322750100D | 227-0207-0 | 5 | 0322760124G | 227-0607-0 | 1 | 0322770113F | 227-0507-0 | 2 |
| 0322740804F | 227-0760-K | 2 | 0322740813E | 227-0760-X | 7 | 0322750102H | 227-0208-0 | 3 | 0322760126B | 227-0606-0 | 2 | 0322770129A | 227-0502-0 | 14 |
| 0322740804F | 227-0760-X | 2 | 0322740813E | 227-0760-Y | 7 | 0322750103A | 227-0207-0 | 12 | 0322760127D | 227-0606-0 | 3 | 0322770204L | 227-0503-0 | 1 |
| 0322740804F | 227-0760-Y | 2 | 0322740813E | 227-0760-Z | 7 | 0322750106G | 227-0207-0 | 1 | 0322760128F | 227-0606-0 | 1 | 0322770204L | 227-0505-0 | 1 |
| 0322740804F | 227-0760-Z | 2 | 0322740815L | 227-0760-0 | 26 | 0322750107L | 227-0207-0 | 11 | 0322760129H | 227-0610-0 | 1 | 0322770208H | 227-0503-0 | 2 |
| 0322740805H | 227-0760-0 | 6 | 0322740815L | 227-0760-K | 26 | 0322750108B | 227-0208-0 | 2 | 0322760130L | 227-0602-0 | 2 | 0322770208H | 227-0505-0 | 2 |
| 0322740805H | 227-0760-K | 6 | 0322740815L | 227-0760-X | 26 | 0322750109D | 227-0208-0 | 1 | 0322760131B | 227-0604-5 | 2 | 0322770209A | 227-0503-0 | 2 |
| 0322740805H | 227-0760-X | 6 | 0322740815L | 227-0760-Y | 26 | 0322750111G | 227-0601-0 | 6 | 0322760132D | 227-0603-0 | 2 | 0322770209A | 227-0505-0 | 2 |
| 0322740805H | 227-0760-Y | 6 | 0322740815L | 227-0760-Z | 26 | 0322750112L | 227-0207-0 | 6 | 0322760133F | 227-0602-0 | 2 | 0322770216E | 227-0503-0 | 10 |
| 0322740805H | 227-0760-Z | 6 | 0322740816B | 227-0760-0 | 3 | 0322750122A | 227-0208-0 | 3 | 0322760141C | 227-0604-5 | 2 | 0322770216E | 227-0707-0 | 21 |
| 0322740806A | 227-0760-0 | 31 | 0322740816B | 227-0760-K | 3 | 0322750163G | 227-0208-0 | 3 | 0322760142E | 227-0604-5 | 1 | 0322770216E | 227-0707-5 | 23 |
| 0322740806A | 227-0760-K | 31 | 0322740816B | 227-0760-X | 3 | 0322750188A | 227-0208-0 | 3 | 0322760161E | 227-0604-0 | 13 | 0322770217G | 227-0707-0 | 17 |
| 0322740806A | 227-0760-X | 31 | 0322740816B | 227-0760-Y | 3 | 0322750189C | 227-0208-0 | 3 | 0322760161E | 227-0604-5 | 8 | 0322770217G | 227-0707-5 | 19 |
| 0322740806A | 227-0760-Y | 31 | 0322740816B | 227-0760-Z | 3 | 0322750190D | 227-0208-0 | 3 | 0322760161E | 227-0605-0 | 2 | 0322770221E | 227-0504-5 | 8 |
| 0322740806A | 227-0760-Z | 31 | 0322740817D | 227-0714-0 | 18 | 0322750301A | 227-0208-0 | 6 | 0322760162G | 227-0608-0 | 3 | 0322770304B | 227-0504-0 | 15 |
| 0322740807C | 227-0760-0 | 34 | 0322740817D | 227-0760-0 | 39 | 0322750302C | 227-0208-0 | 8 | 0322760163L | 227-0608-0 | 6 | 0322770304B | 227-0504-5 | 15 |
| 0322740807C | 227-0760-K | 34 | 0322740819H | 227-0707-0 | 13 | 0322750303E | 227-0208-0 | 7 | 0322760165D | 227-0602-0 | 3 | 0322770304B | 227-0506-0 | 17 |
| 0322740807C | 227-0760-X | 34 | 0322740819H | 227-0707-5 | 15 | 0322760001F | 227-0601-0 | 8 | 0322760165D | 227-0603-0 | 8 | 0322770412A | 227-0504-0 | 9 |
| 0322740807C | 227-0760-Y | 34 | 0322740819H | 227-0760-K | 39 | 0322760104E | 227-0604-0 | 1 | 0322760169C | 227-0603-0 | 12 | 0322770413C | 227-0506-0 | 12 |
| 0322740807C | 227-0760-Z | 34 | 0322740821B | 227-0719-0 | 8 | 0322760104E | 227-0604-5 | 1 | 0322760171F | 227-0601-0 | 14 | 0322770414E | 227-0504-5 | 9 |

| Cod. | Tav. | Pos | Cod. | Tav. | Pos. | Cod. | Tav. | Pos. | Cod. | Tav. | Pos. | Cod. | Tav. | Pos. |
|---|---|---|---|---|---|---|---|---|---|---|---|---|---|---|
| 0322770516B | 227-0502-0 | 15 | 0322781006C | 227-0733-0 | 3 | 0322790403F | 227-1607-0 | 5 | 0327340300C | 227-0107-0 | 12 | 0333531304E | 227-1624-0 | 8 |
| 0322770551E | 227-0501-5 | 2 | 0322781013G | 227-0755-0 | 13 | 0322790404H | 227-1606-0 | 8 | 0327340300C | 227-0107-5 | 5 | 0333531309F | 227-1624-0 | 23 |
| 0322775001D | 227-0803-0 | 6 | 0322781013G | 227-1626-0 | 7 | 0322790405A | 227-1607-0 | 7 | 0327364600H | 227-1607-0 | 6 | 0333531318E | 227-1624-0 | 24 |
| 0322775002F | 227-0803-0 | 6 | 0322781014L | 227-0755-0 | 18 | 0322790411C | 227-1606-0 | 13 | 0327430300B | 227-1103-0 | 2 | 0333531319G | 227-1624-0 | 28 |
| 0322775003H | 227-0803-0 | 6 | 0322781014L | 227-1626-0 | 26 | 0322790412E | 227-1607-0 | 14 | 0327430300B | 227-1203-0 | 2 | 0333535056C | 227-1600-5 | 7 |
| 0322775004A | 227-0401-0 | 5 | 0322781015B | 227-0755-0 | 12 | 0322790502F | 227-1611-0 | 8 | 0327430300B | 227-1304-0 | 2 | 0334019601F | 227-5230-0 | 22 |
| 0322775005C | 227-1405-0 | 8 | 0322781015B | 227-1626-0 | 15 | 0322790502F | 227-1612-0 | 8 | 0327430300B | 227-1403-0 | 2 | 0334019601F | 227-5233-0 | 24 |
| 0322775005C | 227-1427-0 | 6 | 0322781016D | 227-0755-0 | 17 | 0322790502F | 227-1613-0 | 8 | 0327430300B | 227-1504-0 | 2 | 0334042003F | 227-1203-0 | 27 |
| 0322775006E | 227-1406-0 | 9 | 0322781017F | 227-0755-0 | 14 | 0322790502F | 227-1626-0 | 25 | 0327430300B | 227-1606-0 | 2 | 0336210009G | 227-0109-0 | 10 |
| 0322775006E | 227-1411-X | 44 | 0322781018H | 227-0755-0 | 7 | 0322790503H | 227-1611-0 | 7 | 0327430300B | 227-5207-0 | 18 | 0336223853C | 227-0403-0 | 5 |
| 0322775006E | 227-1426-0 | 6 | 0322781018H | 227-1626-0 | 30 | 0322790503H | 227-1612-0 | 7 | 0327430300B | 227-5208-0 | 2 | 0336238261D | 227-5230-0 | 23 |
| 0322775007G | 227-1106-0 | 9 | 0322781026E | 227-1626-0 | 4 | 0322790503H | 227-1613-0 | 7 | 0331140023A | 227-0401-0 | 19 | 0336238261D | 227-5233-0 | 25 |
| 0322775007G | 227-1507-0 | 9 | 0322781026E | 227-1626-0 | 16 | 0322790503H | 227-1626-0 | 23 | 0331140023A | 227-0403-0 | 8 | 0336500265A | 227-1303-5 | 13 |
| 0322775008L | 227-1202-0 | 10 | 0322781029B | 227-1626-0 | 10 | 0322790504A | 227-1611-0 | 3 | 0331514001F | 227-0101-0 | 7 | 0338435338B | 227-5201-0 | 41 |
| 0322775009B | 227-1302-0 | 8 | 0322781031E | 227-0755-0 | 17 | 0322790504A | 227-1613-0 | 3 | 0331514002H | 227-0101-0 | 7 | 0338435338B | 227-5212-0 | 41 |
| 0322775010C | 227-1206-0 | 8 | 0322781032G | 227-0755-0 | 14 | 0322790505C | 227-1611-0 | 2 | 0331514002H | 227-0102-0 | 8 | 0338435338B | 227-5213-0 | 41 |
| 0322775011E | 227-1307-0 | 8 | 0322790201G | 227-1608-0 | 4 | 0322790562C | 227-1606-X | 1 | 0331550204B | 227-1801-0 | 52 | 0339010902F | 227-1107-0 | 1 |
| 0322775012G | 227-1308-0 | 8 | 0322790201G | 227-1621-0 | 14 | 0322790602H | 227-1622-0 | 1 | 0331550282F | 227-1801-0 | 10 | 0339014208H | 227-0504-0 | 8 |
| 0322775013L | 227-1502-0 | 9 | 0322790202L | 227-1608-0 | 1 | 0322790604C | 227-1621-0 | 15 | 0331919070B | 227-1203-0 | 19 | 0339014208H | 227-0504-5 | 8 |
| 0322775014B | 227-0705-0 | 16 | 0322790202L | 227-1621-0 | 11 | 0322790605E | 227-1600-5 | 2 | 0331919070B | 227-1304-0 | 19 | 0339014208H | 227-0506-0 | 10 |
| 0322775016F | 227-0601-0 | 12 | 0322790203B | 227-1610-0 | 7 | 0322790606G | 227-1621-0 | 8 | 0331919070B | 227-1501-X | 30 | 0339024300E | 227-0301-0 | 11 |
| 0322775017H | 227-0803-0 | 3 | 0322790204D | 227-1610-0 | 4 | 0322790608B | 227-1624-0 | 25 | 0331919070B | 227-5230-0 | 18 | 0339049000H | 227-0760-0 | 36 |
| 0322775018A | 227-0601-0 | 13 | 0322790206H | 227-1609-0 | 7 | 0322790609D | 227-1624-0 | 27 | 0331919070B | 227-5233-0 | 18 | 0339049000H | 227-0760-K | 36 |
| 0322775019C | 227-1605-0 | 12 | 0322790207A | 227-1602-0 | 7 | 0322790721A | 227-1604-0 | 8 | 0333140184F | 227-0107-0 | 13 | 0339057710E | 227-1301-0 | 16 |
| 0322775021F | 227-1602-0 | 8 | 0322790209E | 227-1610-0 | 2 | 0322790722C | 227-1604-0 | 1 | 0333140184F | 227-0107-5 | 4 | 0339715043F | 227-1319-0 | 8 |
| 0322775022H | 227-1603-0 | 8 | 0322790301L | 227-1604-0 | 8 | 0323835601B | 227-1319-0 | 19 | 0333150203L | 227-0602-0 | 1 | 0339730020F | 227-1624-0 | 15 |
| 0322775023A | 227-1601-0 | 8 | 0322790302B | 227-1604-0 | 1 | 0324140005H | 227-0801-0 | 32 | 0333150203L | 227-0603-0 | 1 | 0339730022A | 227-1624-0 | 14 |
| 0322775024C | 227-0601-0 | 13 | 0322790303D | 227-1604-0 | 7 | 0324141308C | 227-1801-0 | 1 | 0333531127L | 227-1624-0 | 17 | 0339730032B | 227-1624-0 | 19 |
| 0322775025E | 227-0601-0 | 12 | 0322790304F | 227-1604-0 | 2 | 0324141309E | 227-1801-0 | 5 | 0333531135F | 227-1624-0 | 9 | 0339730033D | 227-1624-0 | 20 |
| 0322775026G | 227-0760-0 | 35 | 0322790306A | 227-1605-0 | 5 | 0324141315G | 227-1801-0 | 9 | 0333531201F | 227-1625-0 | 8 | 0339730401E | 227-1625-0 | 17 |
| 0322775026G | 227-0760-K | 35 | 0322790306A | 227-1606-X | 3 | 0324150403E | 227-0401-0 | 18 | 0333531203A | 227-1625-0 | 9 | 0339735021D | 227-1319-0 | 10 |
| 0322775027L | 227-1427-0 | 9 | 0322790306A | 227-1622-0 | 3 | 0324172915H | 227-0604-0 | 5 | 0333531205E | 227-1625-0 | 11 | 0339765056E | 227-0803-0 | 9 |
| 0322775030E | 227-0108-0 | 6 | 0322790306A | 227-5209-0 | 10 | 0324172915H | 227-0604-5 | 5 | 0333531206G | 227-1625-0 | 3 | 0339765057G | 227-0803-0 | 11 |
| 0322775031G | 227-1206-0 | 10 | 0322790307C | 227-1604-0 | 6 | 0324190811L | 227-1317-0 | 21 | 0333531208B | 227-1625-0 | 24 | 0339765058L | 227-0803-0 | 10 |
| 0322775032L | 227-1307-0 | 10 | 0322790309G | 227-1605-0 | 4 | 0324330313B | 227-0301-0 | 17 | 0333531209D | 227-1625-0 | 23 | 0339765072H | 227-0803-0 | 11 |
| 0322775033B | 227-1308-0 | 10 | 0322790310H | 227-1605-0 | 3 | 0324350031G | 227-1613-0 | 18 | 0333531210E | 227-1625-0 | 1 | 0352100101B | 227-1701-0 | 10 |
| 0322775041H | 227-0803-0 | 8 | 0322790313E | 227-1205-0 | 8 | 0325210300A | 227-0103-0 | 3 | 0333531211G | 227-1625-0 | 12 | 0352100102D | 227-1701-0 | 14 |
| 0322775042A | 227-0803-0 | 12 | 0322790313E | 227-1306-0 | 8 | 0325210300A | 227-0106-0 | 5 | 0333531213B | 227-1625-0 | 15 | 0352100104H | 227-1701-0 | 9 |
| 0322775043C | 227-0803-0 | 12 | 0322790313E | 227-1609-0 | 8 | 0325436700C | 227-1404-0 | 2 | 0333531214D | 227-1625-0 | 21 | 0352100105A | 227-1701-0 | 18 |
| 0322775044E | 227-0803-0 | 8 | 0322790361F | 227-1606-X | 8 | 0326215301A | 227-1317-0 | 24 | 0333531238E | 227-1625-0 | 17 | 0352100106C | 227-1701-0 | 8 |
| 0322775045G | 227-0803-0 | 10 | 0322790362H | 227-1606-X | 9 | 0326227315E | 227-1317-0 | 23 | 0333531247D | 227-1625-0 | 20 | 0352100108G | 227-1701-0 | 3 |
| 0322775046L | 227-0803-0 | 10 | 0322790363A | 227-1606-X | 6 | 0326422704G | 227-1701-0 | 26 | 0333531283L | 227-1625-0 | 11 | 0352100109L | 227-1701-0 | 5 |
| 0322775047B | 227-0803-0 | 10 | 0322790401B | 227-1607-0 | 11 | 0327330105G | 227-0802-0 | 15 | 0333531301H | 227-1624-0 | 3 | 0352100110A | 227-1701-0 | 37 |
| 0322781005A | 227-0733-0 | 5 | 0322790402D | 227-1607-0 | 12 | 0327331100G | 227-0735-0 | 23 | 0333531302A | 227-1624-0 | 2 | 0352100111C | 227-1701-0 | 12 |

| Cod. | Tav. | Pos | Cod. | Tav. | Pos. | Cod. | Tav. | Pos. | Cod. | Tav. | Pos. | Cod. | Tav. | Pos. |
|---|---|---|---|---|---|---|---|---|---|---|---|---|---|---|
| 0352100112E | 227-1701-0 | 16 | 0511136700D | 227-1305-0 | 6 | 0521940117C | 227-0707-0 | 8 | 0522730170B | 227-1202-0 | 2 | 0522732036A | 227-0106-0 | 3 |
| 0352100113G | 227-1701-0 | 17 | 0511136704C | 227-1307-0 | 7 | 0521940117C | 227-0707-5 | 8 | 0522730170B | 227-1206-0 | 2 | 0522732041A | 227-1321-0 | 5 |
| 0352100117F | 227-1701-0 | 24 | 0511136902C | 227-1206-0 | 7 | 0521940117C | 227-0750-0 | 1 | 0522730170B | 227-1302-0 | 2 | 0522732046B | 227-1317-0 | 18 |
| 0352100119A | 227-1701-0 | 27 | 0511140535L | 227-0750-0 | 3 | 0521940598C | 227-0107-0 | 1 | 0522730170B | 227-1307-0 | 2 | 0522732047D | 227-1317-0 | 5 |
| 0352100121D | 227-1701-0 | 35 | 0511190105H | 227-1611-0 | 3 | 0521960114A | 227-1701-0 | 42 | 0522730170B | 227-1308-0 | 2 | 0522732061C | 227-1209-0 | 15 |
| 0352100122F | 227-1701-0 | 33 | 0511190417A | 227-1607-0 | 16 | 0521960312A | 227-1316-0 | 1 | 0522730170B | 227-1405-0 | 2 | 0522732061C | 227-1318-0 | 15 |
| 0352100125C | 227-1701-0 | 15 | 0511190419E | 227-5209-0 | 8 | 0521960607G | 227-1408-0 | 14 | 0522730170B | 227-1406-0 | 2 | 0522732065B | 227-1309-1 | 8 |
| 0352100127G | 227-1701-0 | 39 | 0511190420F | 227-5209-0 | 9 | 0521960607G | 227-1409-0 | 1 | 0522730170B | 227-1411-X | 15 | 0522732104E | 227-1316-0 | 11 |
| 0352100144C | 227-1701-0 | 5 | 0511190427B | 227-5207-0 | 3 | 0521960704C | 227-1410-0 | 4 | 0522730170B | 227-1426-0 | 2 | 0522732106L | 227-1316-0 | 11 |
| 0366180010F | 227-0803-0 | 9 | 0511190428D | 227-5208-0 | 16 | 0521960705E | 227-1410-0 | 1 | 0522730170B | 227-1427-0 | 2 | 0522732201A | 227-0770-0 | 22 |
| 0366535401E | 227-1202-X | 22 | 0511190429F | 227-5207-0 | 2 | 0521990242H | 227-5207-0 | 21 | 0522730170B | 227-1502-0 | 2 | 0522732201A | 227-5203-0 | 22 |
| 0366535401E | 227-1209-0 | 16 | 0511190429F | 227-5208-0 | 14 | 0522340137A | 227-1613-0 | 19 | 0522730170B | 227-1507-0 | 2 | 0522732201A | 227-5204-0 | 22 |
| 0366535401E | 227-1309-0 | 41 | 0511190430G | 227-5206-0 | 17 | 0522710001L | 227-0101-0 | 8 | 0522730170B | 227-1601-0 | 2 | 0522732202C | 227-0770-0 | 9 |
| 0366535401E | 227-1309-1 | 33 | 0516036600B | 227-1103-0 | 3 | 0522710002B | 227-0102-0 | 9 | 0522730170B | 227-1602-0 | 2 | 0522732202C | 227-5203-0 | 9 |
| 0366535401E | 227-1318-0 | 16 | 0516036600B | 227-1203-0 | 3 | 0522710003D | 227-0101-0 | 8 | 0522730170B | 227-1603-0 | 2 | 0522732202C | 227-5204-0 | 9 |
| 0366540107H | 227-0703-X | 11 | 0516036600B | 227-1304-0 | 3 | 0522710018F | 227-0101-0 | 15 | 0522730184B | 227-1312-0 | 3 | 0522732203E | 227-0770-0 | 16 |
| 0366540108A | 227-0703-X | 15 | 0516036600B | 227-1403-0 | 3 | 0522710018F | 227-0102-0 | 18 | 0522730191F | 227-1315-0 | 3 | 0522732203E | 227-5203-0 | 16 |
| 0366542532B | 227-0703-X | 13 | 0516036600B | 227-1606-0 | 3 | 0522710021B | 227-0101-0 | 8 | 0522730193A | 227-1312-0 | 20 | 0522732203E | 227-5204-0 | 16 |
| 0366580019A | 227-5234-0 | 2 | 0516330380A | 227-0801-0 | 25 | 0522710022D | 227-0102-0 | 9 | 0522730300H | 227-1104-0 | 6 | 0522732210L | 227-1316-0 | 1 |
| 0366580020B | 227-5234-0 | 4 | 0519410084F | 227-0801-0 | 23 | 0522710041D | 227-0101-0 | 8 | 0522730300H | 227-1505-0 | 6 | 0522732227F | 227-1316-0 | 1 |
| 0387672010F | 227-1201-0 | 16 | 0519413606H | 227-0603-X | 6 | 0522710042F | 227-0102-0 | 9 | 0522730506F | 227-1428-0 | 17 | 0522732228H | 227-0770-0 | 21 |
| 0387672010F | 227-1301-0 | 18 | 0519433357D | 227-1103-0 | 21 | 0522710043H | 227-0101-0 | 8 | 0522730601G | 227-1407-0 | 5 | 0522740028D | 227-0720-0 | 2 |
| 0510130220F | 227-1411-X | 32 | 0519433357D | 227-1203-0 | 31 | 0522710044A | 227-0102-0 | 9 | 0522730617B | 227-1404-0 | 6 | 0522740031L | 227-0709-0 | 8 |
| 0510130220F | 227-1412-0 | 11 | 0519433357D | 227-1304-0 | 31 | 0522710051E | 227-0101-0 | 8 | 0522730632C | 227-0801-0 | 57 | 0522740033D | 227-0709-0 | 4 |
| 0510130220F | 227-1423-0 | 8 | 0519433357D | 227-1504-0 | 23 | 0522710052G | 227-0101-0 | 8 | 0522730632C | 227-1408-0 | 11 | 0522740041A | 227-0728-0 | 3 |
| 0510130220F | 227-1424-0 | 8 | 0519433357D | 227-1606-0 | 15 | 0522710060D | 227-0101-0 | 8 | 0522730632C | 227-1428-0 | 11 | 0522740046B | 227-0710-0 | 14 |
| 0510130220F | 227-5203-0 | 20 | 0519435321L | 227-1505-0 | 10 | 0522710061F | 227-0102-0 | 9 | 0522730633E | 227-1404-0 | 6 | 0522740046B | 227-0711-0 | 16 |
| 0510130220F | 227-5204-0 | 20 | 0519435323D | 227-1505-0 | 10 | 0522710108G | 227-0108-0 | 3 | 0522730637D | 227-1407-0 | 5 | 0522740046B | 227-0714-0 | 14 |
| 0510140009B | 227-0721-0 | 1 | 0519441208H | 227-0707-0 | 9 | 0522710121D | 227-0101-0 | 18 | 0522730701L | 227-1407-0 | 6 | 0522740046B | 227-0715-0 | 6 |
| 0510140009B | 227-0723-0 | 1 | 0519441208H | 227-0707-5 | 9 | 0522710121D | 227-0102-0 | 19 | 0522730716B | 227-1407-1 | 1 | 0522740116A | 227-0707-0 | 1 |
| 0510140009B | 227-0725-0 | 1 | 0519441208H | 227-0720-0 | 6 | 0522710125C | 227-0101-0 | 2 | 0522730716B | 227-1411-X | 23 | 0522740117C | 227-0707-0 | 2 |
| 0510140009B | 227-5201-0 | 27 | 0519441208H | 227-0801-0 | 29 | 0522710125C | 227-0102-0 | 13 | 0522730717D | 227-1411-X | 24 | 0522740117C | 227-0707-5 | 2 |
| 0510140009B | 227-5212-0 | 27 | 0519441211D | 227-0801-0 | 55 | 0522720114B | 227-0211-0 | 2 | 0522730717D | 227-1422-0 | 1 | 0522740141C | 227-0707-5 | 1 |
| 0510140009B | 227-5213-0 | 27 | 0519450146G | 227-0602-0 | 4 | 0522720116F | 227-0211-0 | 1 | 0522730803F | 227-1505-0 | 10 | 0522740143G | 227-0730-0 | 1 |
| 0510871302H | 227-1625-0 | 25 | 0519450146G | 227-0603-0 | 9 | 0522720120D | 227-0211-0 | 4 | 0522730932L | 227-1408-0 | 15 | 0522740146D | 227-0730-0 | 18 |
| 0511131118D | 227-1310-0 | 7 | 0519480202C | 227-0801-0 | 47 | 0522720414H | 227-0211-0 | 2 | 0522731036L | 227-1201-5 | 26 | 0522740158L | 227-0730-0 | 18 |
| 0511131403H | 227-5201-0 | 17 | 0521930031G | 227-1101-0 | 4 | 0522720416C | 227-0211-0 | 1 | 0522731111H | 227-1206-0 | 7 | 0522740161E | 227-0730-0 | 1 |
| 0511131403H | 227-5212-0 | 17 | 0521930031G | 227-1501-0 | 4 | 0522730137C | 227-1305-0 | 6 | 0522731126A | 227-1209-0 | 15 | 0522740162G | 227-0730-0 | 1 |
| 0511131403H | 227-5213-0 | 17 | 0521930031G | 227-1501-X | 28 | 0522730143E | 227-1307-0 | 7 | 0522731211A | 227-1208-0 | 5 | 0522740185F | 227-0730-0 | 14 |
| 0511131408L | 227-5201-0 | 35 | 0521930410B | 227-1317-0 | 4 | 0522730149H | 227-1303-0 | 5 | 0522731215L | 227-1208-0 | 2 | 0522740396D | 227-0723-X | 5 |
| 0511131408L | 227-5212-0 | 35 | 0521930413H | 227-1317-0 | 13 | 0522730151B | 227-1201-0 | 13 | 0522732008B | 227-1305-0 | 6 | 0522740397F | 227-0723-X | 16 |
| 0511131408L | 227-5213-0 | 35 | 0521930416E | 227-1317-0 | 17 | 0522730151B | 227-1303-0 | 6 | 0522732018C | 227-1312-0 | 4 | 0522740521L | 227-0750-0 | 3 |
| 0511133700A | 227-1410-0 | 21 | 0521930417G | 227-1317-0 | 1 | 0522730153F | 227-1310-0 | 6 | 0522732023C | 227-1310-0 | 7 | 0522740524F | 227-0750-0 | 3 |
| 0511133703G | 227-1410-0 | 20 | 0521930455G | 227-0725-0 | 15 | 0522730170B | 227-1106-0 | 2 | 0522732032B | 227-1319-0 | 12 | 0522740526A | 227-0750-0 | 15 |

| Cod. | Tav. | Pos | Cod. | Tav. | Pos. | Cod. | Tav. | Pos. | Cod. | Tav. | Pos. | Cod. | Tav. | Pos. |
|---|---|---|---|---|---|---|---|---|---|---|---|---|---|---|
| 0522740801D | 227-0707-0 | 1 | 0522750192C | 227-0208-0 | 4 | 0522770561A | 227-0505-0 | 5 | 0552100100D | 227-1701-0 | 49 | 0719480112F | 227-1317-0 | 7 |
| 0522740802F | 227-0760-0 | 8 | 0522760164F | 227-0602-0 | 6 | 0522770571B | 227-0507-0 | 3 | 0552100107L | 227-1701-0 | 21 | 0721900301H | 227-0802-0 | 6 |
| 0522740802F | 227-0760-K | 8 | 0522760166A | 227-0602-0 | 6 | 0522770802C | 227-5234-0 | 3 | 0552100114D | 227-1701-0 | 2 | 0721900302A | 227-0802-0 | 6 |
| 0522740802F | 227-0760-X | 8 | 0522760167C | 227-0603-0 | 11 | 0522780064H | 227-5234-0 | 1 | 0552100115F | 227-1701-0 | 23 | 0721900303C | 227-0802-0 | 6 |
| 0522740802F | 227-0760-Y | 8 | 0522760168E | 227-0603-0 | 11 | 0522781002H | 227-0733-0 | 6 | 0552100116H | 227-1701-0 | 25 | 0721900304E | 227-0802-0 | 6 |
| 0522740802F | 227-0760-Z | 8 | 0522760184H | 227-0603-X | 8 | 0522781003A | 227-0733-0 | 2 | 0552100118C | 227-1701-0 | 29 | 0721900305G | 227-0802-0 | 6 |
| 0522740818A | 227-0721-0 | 16 | 0522760193G | 227-5206-0 | 17 | 0522781004C | 227-0733-0 | 7 | 0552100120F | 227-1701-0 | 30 | 0721900306L | 227-0802-0 | 6 |
| 0522740822H | 227-0760-0 | 22 | 0522760197F | 227-0602-0 | 4 | 0522781011G | 227-0755-0 | 16 | 0552100124E | 227-1701-0 | 53 | 0721900316A | 227-0802-0 | 6 |
| 0522740822H | 227-0760-K | 22 | 0522760503F | 227-0609-0 | 6 | 0522781011G | 227-1626-0 | 12 | 0552100132B | 227-1701-0 | 14 | 0721940231H | 227-0703-0 | 1 |
| 0522740822H | 227-0760-X | 22 | 0522760503F | 227-0611-0 | 6 | 0522781012L | 227-0755-0 | 15 | 0552100133D | 227-1701-0 | 35 | 0721940231H | 227-0703-X | 20 |
| 0522740822H | 227-0760-Y | 22 | 0522770112H | 227-0401-0 | 4 | 0522781030G | 227-1626-0 | 27 | 0552100134F | 227-1701-0 | 33 | 0721940544C | 227-0710-0 | 12 |
| 0522740822H | 227-0760-Z | 22 | 0522770116G | 227-0731-0 | 3 | 0522790205A | 227-1610-0 | 3 | 0566540103D | 227-0703-X | 5 | 0721940544C | 227-0711-0 | 12 |
| 0522740823A | 227-0707-5 | 1 | 0522770118B | 227-0502-0 | 1 | 0522790208G | 227-1601-0 | 7 | 0566542529A | 227-0703-X | 18 | 0721940544C | 227-0712-0 | 12 |
| 0522740850G | 227-0707-0 | 1 | 0522770121G | 227-0732-0 | 3 | 0522790208G | 227-1603-0 | 7 | 0710030208E | 227-1426-0 | 8 | 0721940544C | 227-0713-0 | 12 |
| 0522740922A | 227-1322-0 | 8 | 0522770122L | 227-0732-0 | 2 | 0522790308L | 227-1605-0 | 8 | 0710030208E | 227-1427-0 | 8 | 0721940544C | 227-0714-0 | 7 |
| 0522740923C | 227-1322-0 | 6 | 0522770127A | 227-0732-0 | 3 | 0522790501H | 227-1611-0 | 10 | 0710120600E | 227-0301-0 | 2 | 0721940544C | 227-0715-0 | 7 |
| 0522741003B | 227-1801-0 | 53 | 0522770134E | 227-0732-0 | 5 | 0522790521A | 227-1612-0 | 6 | 0710830024C | 227-5207-0 | 8 | 0721940544C | 227-0716-0 | 4 |
| 0522741009E | 227-1801-0 | 32 | 0522770212A | 227-0503-0 | 5 | 0522790521A | 227-1626-0 | 24 | 0710830024C | 227-5208-0 | 12 | 0721940544C | 227-0717-0 | 4 |
| 0522741014E | 227-1801-0 | 6 | 0522770213C | 227-0507-0 | 3 | 0522790522C | 227-1612-0 | 3 | 0710830070L | 227-5207-0 | 8 | 0721940544C | 227-5201-0 | 60 |
| 0522741501H | 227-0707-0 | 1 | 0522770214E | 227-0506-0 | 2 | 0522790522C | 227-1626-0 | 18 | 0710830070L | 227-5208-0 | 12 | 0721940593F | 227-0707-0 | 6 |
| 0522750101A | 227-0208-0 | 4 | 0522770215G | 227-0505-0 | 5 | 0522790541C | 227-1613-0 | 10 | 0711132522F | 227-1425-0 | 13 | 0721940593F | 227-0707-5 | 6 |
| 0522750110L | 227-0208-0 | 4 | 0522770218D | 227-0707-0 | 18 | 0522790561E | 227-1606-X | 2 | 0711133713C | 227-1505-0 | 10 | 0721940593F | 227-0708-0 | 4 |
| 0522750116C | 227-0208-0 | 4 | 0522770218D | 227-0707-5 | 20 | 0522790601A | 227-1622-0 | 2 | 0711136303F | 227-1105-0 | 1 | 0721940593F | 227-0740-0 | 10 |
| 0522750121C | 227-0208-0 | 4 | 0522770219F | 227-0505-0 | 5 | 0522790603E | 227-1621-0 | 10 | 0711136303F | 227-1411-X | 1 | 0721940808D | 227-0721-0 | 14 |
| 0522750123G | 227-0208-0 | 4 | 0522770311A | 227-0504-0 | 2 | 0522790607D | 227-1600-5 | 3 | 0711136303F | 227-1425-0 | 1 | 0721940808D | 227-0723-0 | 14 |
| 0522750124L | 227-0208-0 | 4 | 0522770312C | 227-0504-5 | 2 | 0524140009B | 227-0801-0 | 56 | 0711136303F | 227-1503-0 | 12 | 0721940808D | 227-0725-0 | 14 |
| 0522750125B | 227-0208-0 | 4 | 0522770402D | 227-0504-0 | 3 | 0524141312E | 227-1801-0 | 11 | 0719412601A | 227-1207-0 | 4 | 0721940808D | 227-5201-0 | 8 |
| 0522750126D | 227-0208-0 | 4 | 0522770402D | 227-0506-0 | 5 | 0531510020F | 227-0101-0 | 20 | 0719412601A | 227-1303-0 | 10 | 0721940808D | 227-5212-0 | 8 |
| 0522750127F | 227-0208-0 | 4 | 0522770402D | 227-0506-0 | 6 | 0531510020F | 227-0102-0 | 21 | 0719412601A | 227-1310-0 | 1 | 0721940808D | 227-5213-0 | 8 |
| 0522750128H | 227-0208-0 | 4 | 0522770404H | 227-0506-0 | 4 | 0533510104L | 227-0101-0 | 21 | 0719412601A | 227-1405-0 | 17 | 0722730303L | 227-1106-0 | 8 |
| 0522750129A | 227-0208-0 | 5 | 0522770405A | 227-0504-0 | 3 | 0533531248A | 227-1625-0 | 18 | 0719412601A | 227-5211-0 | 9 | 0722730303L | 227-1501-X | 8 |
| 0522750130B | 227-0208-0 | 4 | 0522770405A | 227-0506-0 | 5 | 0533531303G | 227-1624-0 | 5 | 0719412602C | 227-0609-0 | 1 | 0722730303L | 227-1502-0 | 8 |
| 0522750131D | 227-0208-0 | 4 | 0522770406C | 227-0504-5 | 3 | 0539012163D | 227-0502-0 | 11 | 0719412602C | 227-0611-0 | 1 | 0722730303L | 227-1507-0 | 8 |
| 0522750161G | 227-0208-0 | 4 | 0522770501D | 227-0501-0 | 1 | 0539014209E | 227-0504-0 | 6 | 0719412602C | 227-0721-0 | 6 | 0722730735F | 227-1426-0 | 8 |
| 0522750162L | 227-0208-0 | 4 | 0522770502F | 227-0501-0 | 3 | 0539014209E | 227-0504-5 | 6 | 0719412602C | 227-0723-0 | 3 | 0722731191B | 227-1202-X | 19 |
| 0522750180G | 227-0208-0 | 4 | 0522770511E | 227-0502-0 | 1 | 0539014209E | 227-0506-0 | 11 | 0719412602C | 227-0725-0 | 3 | 0722732012D | 227-1205-0 | 13 |
| 0522750181L | 227-0208-0 | 4 | 0522770514B | 227-0502-0 | 12 | 0539034703G | 227-1404-0 | 1 | 0719412602C | 227-1201-0 | 1 | 0722732012D | 227-1306-0 | 13 |
| 0522750182B | 227-0208-0 | 4 | 0522770521F | 227-0503-0 | 5 | 0539055800H | 227-0770-0 | 20 | 0719412602C | 227-1311-0 | 1 | 0722732022E | 227-1309-0 | 32 |
| 0522750183D | 227-0208-0 | 4 | 0522770522H | 227-0503-0 | 9 | 0539055800H | 227-1423-0 | 8 | 0719412602C | 227-1410-0 | 6 | 0722732022E | 227-1309-1 | 32 |
| 0522750184F | 227-0208-0 | 4 | 0522770522H | 227-0505-0 | 6 | 0539055800H | 227-1424-0 | 8 | 0719412602C | 227-5201-0 | 1 | 0722732033H | 227-1319-0 | 15 |
| 0522750185H | 227-0208-0 | 4 | 0522770552B | 227-0501-5 | 1 | 0539057302D | 227-1317-0 | 5 | 0719412602C | 227-5212-0 | 1 | 0722740014H | 227-0710-0 | 8 |
| 0522750186A | 227-0208-0 | 4 | 0522770553D | 227-0501-0 | 2 | 0539730018G | 227-1624-0 | 16 | 0719412602C | 227-5213-0 | 1 | 0722740014H | 227-0711-0 | 8 |
| 0522750187C | 227-0208-0 | 4 | 0522770553D | 227-0501-5 | 3 | 0539730031D | 227-1624-0 | 6 | 0719412603E | 227-1201-0 | 1 | 0722740014H | 227-0712-0 | 8 |
| 0522750191A | 227-0208-0 | 4 | 0522770554F | 227-1202-X | 20 | 0539730034A | 227-1624-0 | 18 | 0719480112F | 227-0727-0 | 8 | 0722740014H | 227-0713-0 | 8 |

| Cod. | Tav. | Pos | Cod. | Tav. | Pos. | Cod. | Tav. | Pos. | Cod. | Tav. | Pos. | Cod. | Tav. | Pos. |
|---|---|---|---|---|---|---|---|---|---|---|---|---|---|---|
| 0722740014H | 227-0714-0 | 12 | 0722765003E | 227-0802-0 | 5 | 0766535414B | 227-1309-0 | 42 | 1111111111F | 227-1200-0 | 1 | 2719090201E | 227-0801-0 | 26 |
| 0722740014H | 227-0715-0 | 12 | 0722765031D | 227-0802-0 | 1 | 0766535414B | 227-1309-1 | 34 | 1111111111F | 227-1400-0 | 1 | 2719440113B | 227-0801-0 | 38 |
| 0722740014H | 227-0716-0 | 8 | 0722765200C | 227-0770-0 | 14 | 0766535414B | 227-1318-0 | 17 | 1111111111F | 227-1420-0 | 1 | 2719461305E | 227-0801-0 | 20 |
| 0722740014H | 227-0717-0 | 8 | 0722765200C | 227-5203-0 | 14 | 0766547297G | 227-1103-0 | 12 | 1111111111F | 227-1421-0 | 1 | 2721941001D | 227-0802-0 | 14 |
| 0722740014H | 227-5201-0 | 53 | 0722765200C | 227-5204-0 | 14 | 0766547297G | 227-1203-0 | 12 | 1111111111F | 227-1500-0 | 0 | 2721941002F | 227-0802-0 | 14 |
| 0722740030B | 227-0709-0 | 6 | 0722770415F | 227-0504-0 | 17 | 0766547297G | 227-1304-0 | 12 | 1111111111F | 227-1600-0 | 0 | 2722701000C | 227-0708-0 | 2 |
| 0722740030B | 227-0760-0 | 32 | 0722770415F | 227-0504-5 | 17 | 0766547297G | 227-1403-0 | 12 | 1111111111F | 227-1620-0 | 1 | 2722701001E | 227-0707-5 | 10 |
| 0722740030B | 227-0760-K | 32 | 0725414714E | 227-0504-0 | 13 | 0766547297G | 227-1504-0 | 12 | 1111111111F | 227-1623-0 | 1 | 2722701001E | 227-0708-0 | 3 |
| 0722740030B | 227-0760-X | 32 | 0725414714E | 227-0504-5 | 13 | 0766547298L | 227-1103-0 | 12 | 1411020904F | 227-1701-0 | 26 | 2722701002G | 227-0707-5 | 11 |
| 0722740030B | 227-0760-Y | 32 | 0725414714E | 227-0506-0 | 15 | 0766547298L | 227-1203-0 | 12 | 1416330018C | 227-1102-0 | 1 | 2722701003L | 227-0708-0 | 5 |
| 0722740030B | 227-0760-Z | 32 | 0733521168C | 227-0706-0 | 13 | 0766547298L | 227-1304-0 | 12 | 1416330018C | 227-1207-0 | 6 | 2722701004B | 227-0720-0 | 1 |
| 0722740061G | 227-0710-0 | 8 | 0733521168C | 227-1309-0 | 2 | 0766547298L | 227-1403-0 | 12 | 1416330018C | 227-1310-0 | 2 | 2722701004B | 227-0723-X | 1 |
| 0722740061G | 227-0711-0 | 8 | 0733521168C | 227-1309-1 | 2 | 0766547298L | 227-1504-0 | 12 | 1416330018C | 227-1311-0 | 2 | 2722701004B | 227-0801-0 | 53 |
| 0722740061G | 227-0712-0 | 8 | 0733521168C | 227-1319-0 | 20 | 0766547298L | 227-1606-0 | 12 | 1416330018C | 227-1503-0 | 1 | 2722701005D | 227-0708-0 | 1 |
| 0722740061G | 227-0713-0 | 8 | 0733530105A | 227-1309-0 | 32 | 0766547299B | 227-1103-0 | 6 | 1416330018C | 227-1801-0 | 33 | 2722712503D | 227-5233-0 | 3 |
| 0722740061G | 227-0714-0 | 12 | 0733530105A | 227-1309-1 | 32 | 0766547299B | 227-1203-0 | 6 | 1422730131H | 227-1312-0 | 4 | 2722712506A | 227-5233-0 | 20 |
| 0722740061G | 227-0715-0 | 12 | 0736223847L | 227-0770-0 | 12 | 0766547299B | 227-1304-0 | 6 | 1501711500F | 227-1607-0 | 8 | 2722732211H | 227-1308-0 | 15 |
| 0722740061G | 227-0716-0 | 8 | 0736223847L | 227-5203-0 | 12 | 0766547299B | 227-1403-0 | 6 | 1510812603F | 227-0101-0 | 7 | 2722732211H | 227-5204-0 | 4 |
| 0722740061G | 227-0717-0 | 8 | 0736223847L | 227-5204-0 | 12 | 0766547299B | 227-1504-0 | 6 | 1510812603F | 227-0102-0 | 8 | 2722732212A | 227-1309-0 | 37 |
| 0722740115C | 227-0735-0 | 18 | 0736234876D | 227-1606-X | 4 | 0766547299B | 227-1606-0 | 6 | 1519410087D | 227-0101-0 | 7 | 2722732212A | 227-1320-0 | 15 |
| 0722740119B | 227-0735-0 | 24 | 0736237069E | 227-1322-0 | 7 | 0766580007D | 227-1106-0 | 1 | 1519410087D | 227-0102-0 | 8 | 2722732212A | 227-5203-0 | 4 |
| 0722740119B | 227-0740-0 | 1 | 0736237074E | 227-0604-0 | 7 | 0766580007D | 227-1202-0 | 1 | 1521420606B | 227-0101-0 | 1 | 2722740705G | 227-0736-0 | 16 |
| 0722740120C | 227-0735-0 | 8 | 0738210165A | 227-0703-X | 1 | 0766580007D | 227-1206-0 | 1 | 1521420606B | 227-0102-0 | 14 | 2722740706L | 227-0736-0 | 16 |
| 0722740131F | 227-0735-0 | 30 | 0739045501F | 227-0107-0 | 11 | 0766580007D | 227-1302-0 | 1 | 2710101600D | 227-0801-0 | 49 | 2722740707B | 227-0736-0 | 16 |
| 0722740132H | 227-0520-0 | 6 | 0739045501F | 227-0107-5 | 11 | 0766580007D | 227-1307-0 | 1 | 2710103700H | 227-0727-0 | 100 | 2722740801A | 227-1201-5 | 17 |
| 0722740132H | 227-1105-0 | 1 | 0739045501F | 227-0109-0 | 9 | 0766580007D | 227-1426-0 | 1 | 2710103700H | 227-0728-0 | 1 | 2722740801A | 227-1303-5 | 16 |
| 0722740132H | 227-1402-0 | 1 | 0739715095E | 227-5201-0 | 42 | 0766580007D | 227-1427-0 | 1 | 2710104100F | 227-0801-0 | 35 | 2722740891A | 227-1201-5 | 17 |
| 0722740132H | 227-1503-0 | 12 | 0739715095E | 227-5212-0 | 42 | 0766580007D | 227-1502-0 | 1 | 2710104900D | 227-0801-0 | 34 | 2722740891A | 227-1303-5 | 16 |
| 0722740132H | 227-1506-0 | 1 | 0739715095E | 227-5213-0 | 42 | 0766580007D | 227-1507-0 | 1 | 2710105400D | 227-0801-0 | 49 | 2722760101L | 227-0604-0 | 4 |
| 0722740133A | 227-1406-0 | 8 | 0739736140F | 227-0706-0 | 13 | 0766580007D | 227-1601-0 | 1 | 2710105600H | 227-0801-0 | 43 | 2722760101L | 227-0604-5 | 4 |
| 0722740133A | 227-1411-X | 20 | 0739736140F | 227-1309-0 | 2 | 0766580007D | 227-1602-0 | 1 | 2711131510B | 227-1201-5 | 17 | 2722760101L | 227-0605-0 | 3 |
| 0722740133A | 227-1426-0 | 8 | 0739736141H | 227-1202-X | 12 | 0766580007D | 227-1603-0 | 1 | 2711131510B | 227-1303-5 | 16 | 2722760117D | 227-0604-0 | 4 |
| 0722740133A | 227-1427-0 | 8 | 0739736141H | 227-1309-0 | 2 | 0775190005F | 227-0770-0 | 13 | 2711135400C | 227-1100-0 | 3 | 2722760119H | 227-0604-0 | 8 |
| 0722740136G | 227-0705-0 | 14 | 0739736141H | 227-1309-1 | 2 | 0775190005F | 227-5203-0 | 13 | 2711135400C | 227-1200-0 | 3 | 2722760140B | 227-0604-5 | 4 |
| 0722740139D | 227-0520-0 | 1 | 0739736141H | 227-1319-0 | 20 | 0775190005F | 227-5204-0 | 13 | 2711135400C | 227-1300-0 | 3 | 2722760172L | 227-0604-0 | 4 |
| 0722740149E | 227-0520-0 | 1 | 0739736141H | 227-1501-X | 2 | 0790568055L | 227-1313-0 | 3 | 2711135400C | 227-1500-0 | 3 | 2722760172L | 227-0604-5 | 4 |
| 0722740703A | 227-0736-0 | 14 | 0739736141H | 227-1801-0 | 28 | 0790568055L | 227-1314-0 | 11 | 2711135400C | 227-1600-0 | 3 | 2722765101E | 227-0801-0 | 39 |
| 0722740704C | 227-0736-0 | 15 | 0739736145G | 227-0706-0 | 13 | 0790568055L | 227-1701-0 | 40 | 2711135400C | 227-5205-0 | 2 | 2722765102G | 227-0801-0 | 40 |
| 0722740704C | 227-1607-0 | 10 | 0739736145G | 227-1209-0 | 2 | 1111111111F | 227-0001-0 | 1 | 2711135410D | 227-1100-0 | 3 | 2722765103L | 227-0801-0 | 41 |
| 0722741008G | 227-1801-0 | 24 | 0739736145G | 227-1318-0 | 2 | 1111111111F | 227-0501-0 | 0 | 2711135410D | 227-1200-0 | 3 | 2722765104B | 227-0801-0 | 39 |
| 0722741025C | 227-1801-0 | 13 | 0739736145G | 227-1501-X | 2 | 1111111111F | 227-0501-5 | 0 | 2711135410D | 227-1300-0 | 3 | 2722765105D | 227-0801-0 | 40 |
| 0722741026E | 227-1801-0 | 12 | 0746735003L | 227-1607-0 | 15 | 1111111111F | 227-0701-0 | 1 | 2711135410D | 227-1500-0 | 3 | 2722765106F | 227-0801-0 | 41 |
| 0722765001A | 227-0802-0 | 5 | 0766535414B | 227-1202-X | 21 | 1111111111F | 227-0701-5 | 1 | 2711135410D | 227-5205-0 | 2 | 2722770105A | 227-0502-0 | 2 |
| 0722765002C | 227-0802-0 | 5 | 0766535414B | 227-1209-0 | 17 | 1111111111F | 227-0702-0 | 1 | 2716048201F | 227-0801-0 | 24 | 2722770117F | 227-0731-0 | 2 |

| Cod. | Tav. | Pos | Cod. | Tav. | Pos. | Cod. | Tav. | Pos. | Cod. | Tav. | Pos. | Cod. | Tav. | Pos. |
|---|---|---|---|---|---|---|---|---|---|---|---|---|---|---|
| 2722770117F | 227-0731-0 | 2 | 2921920201G | 227-0401-0 | 17 | | | | | | | | | |
| 2722770124A | 227-0502-0 | 6 | 2921967201D | 227-1611-0 | 1 | | | | | | | | | |
| 2722770125C | 227-0731-0 | 2 | 2921967201D | 227-1613-0 | 1 | | | | | | | | | |
| 2722770130C | 227-0502-0 | 2 | 2922712500B | 227-5233-0 | 1 | | | | | | | | | |
| 2722770131E | 227-0731-0 | 6 | 2922720101E | 227-1624-0 | 100 | | | | | | | | | |
| 2722770206E | 227-0503-0 | 3 | 2922760101D | 227-1625-0 | 100 | | | | | | | | | |
| 2722770206E | 227-0505-0 | 4 | 2922770402E | 227-0504-0 | 3 | | | | | | | | | |
| 2722770301F | 227-0504-0 | 10 | 2922770402E | 227-0506-0 | 5 | | | | | | | | | |
| 2722770321H | 227-0506-0 | 1 | 2922770404L | 227-0506-0 | 4 | | | | | | | | | |
| 2722770330G | 227-0504-5 | 10 | 2922770405B | 227-0506-0 | 5 | | | | | | | | | |
| 2722770512D | 227-0502-0 | 6 | 2922770406D | 227-0504-5 | 3 | | | | | | | | | |
| 2722785101L | 227-0401-0 | 1 | 2922780101H | 227-0770-0 | 17 | | | | | | | | | |
| 2722785201B | 227-0401-0 | 1 | 2922780101H | 227-5203-0 | 17 | | | | | | | | | |
| 2722785202D | 227-0401-0 | 1 | 2922780101H | 227-5204-0 | 17 | | | | | | | | | |
| 2722790305L | 227-1604-0 | 4 | 2937220503E | 227-0401-0 | 1 | | | | | | | | | |
| 2723838663G | 227-0802-0 | 100 | 2937220504G | 227-0401-0 | 1 | | | | | | | | | |
| 2723838801A | 227-0802-0 | 101 | 2939067101A | 227-0801-0 | 46 | | | | | | | | | |
| 2723843006A | 227-1319-0 | 20 | 2939075101A | 227-0801-0 | 27 | | | | | | | | | |
| 2736237456H | 227-5233-0 | 19 | 2952100006F | 227-1701-0 | 100 | | | | | | | | | |
| 2739030101B | 227-1103-0 | 3 | 2952100007H | 227-1701-0 | 100 | | | | | | | | | |
| 2739030101B | 227-1203-0 | 3 | 2987772011E | 227-0403-0 | 1 | | | | | | | | | |
| 2739030101B | 227-1304-0 | 3 | 9622020312F | 227-0106-0 | 4 | | | | | | | | | |
| 2739030101B | 227-1403-0 | 3 | 9622089002B | 227-1309-0 | 27 | | | | | | | | | |
| 2739030101B | 227-1504-0 | 3 | 9622089002B | 227-1309-1 | 27 | | | | | | | | | |
| 2739074300G | 227-0801-0 | 42 | 9622089002B | 227-1319-0 | 22 | | | | | | | | | |
| 2739074301L | 227-0801-0 | 42 | | | | | | | | | | | | |
| 2739090101E | 227-0301-0 | 7 | | | | | | | | | | | | |
| 2746750101H | 227-0736-0 | 16 | | | | | | | | | | | | |
| 2746750101H | 227-1607-0 | 9 | | | | | | | | | | | | |
| 2746750102A | 227-0736-0 | 16 | | | | | | | | | | | | |
| 2746750102A | 227-1607-0 | 9 | | | | | | | | | | | | |
| 2746750201A | 227-1607-0 | 9 | | | | | | | | | | | | |
| 2746750202C | 227-1607-0 | 9 | | | | | | | | | | | | |
| 2752100002C | 227-1701-0 | 57 | | | | | | | | | | | | |
| 2752100003E | 227-1701-0 | 1 | | | | | | | | | | | | |
| 2903048101A | 227-0801-0 | 22 | | | | | | | | | | | | |
| 2911135100A | 227-5230-0 | 1 | | | | | | | | | | | | |
| 2911135105B | 227-5230-0 | 3 | | | | | | | | | | | | |
| 2911140900E | 227-1901-0 | 1 | | | | | | | | | | | | |
| 2911140901G | 227-1901-0 | 1 | | | | | | | | | | | | |
| 2911140902L | 227-1901-0 | 1 | | | | | | | | | | | | |
| 2911140903B | 227-1901-0 | 1 | | | | | | | | | | | | |
| 2911140909E | 227-1901-0 | 1 | | | | | | | | | | | | |
| 2911140925H | 227-1901-0 | 1 | | | | | | | | | | | | |

| Codice/Code | Descrizione/Descr./Beschr./Denom. |
|---|---|
| 0000300028C | ROSETTA 8,5X30X4 SVAS. |
| 0000301181G | DADO M6 6S UNI 5588 ES.NORM. BRUN. |
| 0000301301C | DADO M8 6S UNI 5588 ES.NORM. BRUN. |
| 0000301303G | UNI 7473 6S DADO M8 ES.NORM.AUTOFR. |
| 0000301309A | DADO M8 6S UNI 7474 ES.BASSO AUTOFR. ZINC. |
| 0000301361L | DADO M10 6S UNI 5588 ES.NORM. BRUN. |
| 0000301363D | DADO M10 6S UNI 7473 ES.NORM.AUTOFR. ZINC |
| 0000301368E | DADO M10 6S UNI 7474 ES.BASSO AUTOFR. ZINC. |
| 0000301422L | DADO M12 6S UNI 5587 ES.ALTO BRUN. |
| 0000301429E | GHIERA M12X1 AUTOFR. GUK |
| 0000301430F | DADO M12 6S UNI 7474 ES.BASSO AUTOFR. ZINC. |
| 0000301431H | DADO M12 6S UNI 7473 ES.NORM.AUTOFR. ZINC. |
| 0000301484A | DADO M14 6S UNI 7473 ES.NORM.AUTOFR. |
| 0000301537D | DADO M16X1,5 6S UNI 7473 ES.NORM.AUTOFR. ZINC. |
| 0000301559A | GHIERA M17X1 AUTOFR. GUK |
| 0000301849F | GHIERA M20X1 AUTOFR. GUK |
| 0000301852B | GHIERA M25X1,5 AUTOFR. GUK |
| 0000301853D | GHIERA M20X1,5 AUTOFR. GUA |
| 0000301868F | GHIERA M50X1,5 DI BLOCCAG. KM10 |
| 0000301876C | GHIERA M20X1 DIBLOCCAGG.KM4 |
| 0000302305C | VITE M10 X 40 12.9 UNI 5925 STEI E.CIL. BRUN. |
| 0000303309C | VITE M10 X 40 12.9 UNI 5927 STEI E.CON. BRUN. |
| 0000303339F | VITE M10 X 60 12.9 UNI 5927 STEI E.CON. BRUN. |
| 0000304183E | UNI 5923 12.9 VITE M6X16 STEI E.PIANA |
| 0000304245G | VITE M8 X 30 12.9 UNI 5923 STEI E.PIA. BRUN. |
| 0000304246L | VITE M8 X 35 12.9 UNI 5923 STEI E.PIA. BRUN. |
| 0000304260H | VITE M8 X 55 12.9 UNI 5923 STEI E.PIA. BRUN. |
| 0000304302H | VITE M10 X 16 12.9 UNI 5923 STEI E.PIA. BRUN. |
| 0000304305E | VITE M10 X 30 12.9 UNI 5923 STEI E.PIA. BRUN. |
| 0000304307L | VITE M10 X 40 12.9 UNI 5923 STEI E.PIA. BRUN. |
| 0000304309D | VITE M10 X 50 12.9 UNI 5923 STEI E.PIA.BRUN. |
| 0000304320F | VITE M10 X 75 12.9 UNI 5923 STEI E.PIA.BRUN. |
| 0000304329F | VITE M10 X 60 12.9 UNI 5923 STEI E.PIA. BRUN. |
| 0000304339G | VITE M10 X 100 12,9 UNI 5923 STEI E.PIA. BRUN. |
| 0000304365B | VITE M12x30 12,9 UNI 5923 STEI E.PIA. BRUNITO |
| 0000304489E | VITE M10 X 70 12.9 UNI 5923 STEI E.PIA. BRUN. |
| 0000305044B | ROSETTA 14,5 X 24,0 X 2,5 BRUN |
| 0000305121E | ROSETTA 5,5 X 11,0 X 1 BRUN |
| 0000305122G | ROSETTA 5,5 X 20,0 X 2 BRUN |
| 0000305159F | ROSETTA 50X62 X 0,1 DIN 988 SPESS.PS |
| 0000305181B | ROSETTA 6,5 X 13,0 X 1 BRUN |

| Codice/Code | Descrizione/Descr./Beschr./Denom. |
|---|---|
| 0000305230F | ROSETTA 8,5 X 25,0 X 5 UNI 6594 SVASATA BRUN |
| 0000305243D | ROSETTA 8,5 X 18,0 X 3 BRUN |
| 0000305245H | ROSETTA 8,5 X 30,0 X 4 BRUN |
| 0000305246A | ROSETTA 8,5 X 33,0 X 3 BRUN |
| 0000305249G | ROSETTA 8,5 X 40,0 X 6 UNI 6594 SVASATA BRUN |
| 0000305253E | ROSETTA 8,5 X 30,0 X 6 UNI 6594 SVASATA BRUN |
| 0000305294B | ROSETTA 8,5X18X3 SVASATA |
| 0000305302L | ROSETTA 10,5 X 22,0 X 2 BRUN |
| 0000305307A | ROSETTA 10,5 X 35,0 X 5 BRUN |
| 0000305318D | ROSETTA 10,5 X 22,0 X 4 BRUN |
| 0000305332C | ROSETTA 10,5 X 21,5 X 2 BRUN |
| 0000305338F | ROSETTA 10,5 X 18,0 X 2 BRUN |
| 0000305340L | ROSETTA 10,5 X 24,0 X 3 BRUN |
| 0000305361D | ROSETTA 12,5 X 24,0 X 2,5 BRUN |
| 0000305372G | ROSETTA 13,5 X 19,0 X 1 RAME |
| 0000305377H | ROSETTA 12,5 X 40,0 X 5 BRUN |
| 0000305757E | ANELLO 28/05 27,8X21X0,5 DI SPESSORAMENTO |
| 0000305780C | ANELLO 22/05 21,8X14X0,5 DI SPESSORAMENTO |
| 0000305850B | ANELLO DISTANZIALE 60X40X0,1 VITOX 149 |
| 0000305851D | ANELLO DISTANZIALE 60X40X0,2 VITOX 149 |
| 0000306262E | SPINA 6 X 16 UNI 6873 ELAST.PESANTE BRUN. |
| 0000307020C | SPINA 5 X 30 A UNI 6364 CILINDR.TEMP. |
| 0000307316B | SPINA 10X 32 A UNI 6364 CILINDR.TEMP. |
| 0000307319H | SPINA 10 X 45 A UNI 6364 CILINDR.TEMP. |
| 0000307335B | SPINA 10 X 60 A UNI 6364 CILINDR.TEMP. |
| 0000307341D | SPINA 10 X 24 A UNI 6364 CILINDR.TEMP. |
| 0000308121H | VITE M5 X 10 8.8 UNI 5739 T ES.TF BRUN. |
| 0000308202A | VITE M6 X 12 8.8 UNI 5739 T ES.TF BRUN. |
| 0000308283B | VITE M12 X 160 8.8 UNI 5737 T ES. |
| 0000308305L | VITE M8 X 30 8.8 UNI 5739 T ES.TF BRUN. |
| 0000308318G | VITE M8 X 40 8.8 UNI 5739 T ES. TF BRUN. |
| 0000308354C | VITE M8 X 55 8.8 UNI 5737 T ES. BRUN. |
| 0000308367A | VITE M10 X 45 8.8 UNI 5737 T ES.BRUN |
| 0000308374E | VITE M10 X 90 8.8 UNI 5737 T ES. BRUN. |
| 0000308394G | VITE M8 X 22 8.8 UNI 5739 T ES.TF BRUN. |
| 0000308408H | VITE M12 X 160 10.9 UNI 5737 T ES. BRUN. |
| 0000308422G | VITE M12 X 20 8.8 UNI 5739 T ES.TF BRUN. |
| 0000308440E | VITE M12 X 40 8.8 UNI 5739 T ES.TF BRUN. |
| 0000308447A | VITE M12 X 45 8.8 UNI 5739 T ES.TF BRUN. |
| 0000308485A | VITE M14 X 60 8.8 UNI 5737 T ES. BRUN. |
| 0000308565A | VITE M16 X 50 8.8 UNI 5739 T ES.TF BRUN. |

| Codice/Code | Descrizione/Descr./Beschr./Denom. |
|---|---|
| 0000308566C | VITE M16 X 55 8.8 UNI 5739 T ES.TF BRUN. |
| 0000309118D | VITE M5 X 6 8.8 UNI 5931 TCEI TF BRUN |
| 0000309121L | VITE M5 X 10 8.8 UNI 5931 TCEI TF BRUN |
| 0000309123D | VITE M5 X 20 8.8 UNI 5931 TCEI TF BRUN |
| 0000309135L | VITE M5 X 12 8.8 UNI 5931 TCEI BRUN |
| 0000309145A | VITE M5 X 12 8.8 UNI 5931 TCEI TF BRUN |
| 0000309180D | VITE M6 X 8 8.8 UNI 5931 TCEI TF BRUN |
| 0000309181F | VITE M6 X 10 8.8 UNI 5931 TCEI TF BRUN |
| 0000309199E | VITE M6 X 12 8.8 UNI 5931 TCEI TF BRUN |
| 0000309224H | VITE M6 X 22 8,8 UNI 5931 TCEI TF BRUN |
| 0000309243H | VITE M8 X 16 8.8 UNI 5931 TCEI TF BRUN |
| 0000309248L | VITE M8 X 35 8.8 UNI 5931 TCEI BRUN |
| 0000309250C | VITE M8 X 45 8.8 UNI 5931 TCEI BRUN |
| 0000309267L | VITE M8 X 12 8.8 UNI 5931 TCEI TF BRUN |
| 0000309275F | VITE M10 X 20 8.8 UNI 9327 TC RIBAS.ES.I. BRUN |
| 0000309306C | VITE M10 X 40 8.8 UNI 5931 TCEI BRUN |
| 0000309307E | VITE M10 X 45 8.8 UNI 5931 TCEI BRUN |
| 0000309323H | VITE M10 X 55 8.8 UNI 5931 TCEI BRUN |
| 0000309369F | VITE M12 X 60 8.8 UNI 5931 TCEI BRUN |
| 0000310059A | VITE M3 X 12 10.9 UNI 5933 T SV.PIA.ES.I. BRUN. |
| 0000310242H | VITE M8 X 20 10.9 UNI 5933 T SV.PIA.ES.I. BRUN. |
| 0000310243A | VITE M8 X 25 10.9 UNI 5933 T SV.PIA.ES.I. BRUN. |
| 0000310245E | VITE M8 X 35 10.9 UNI 5933 T SV.PIA.ES.I. BRUN. |
| 0000310246G | VITE M8 X 40 10.9 UNI 5933 T SV.PIA.ES.I. BRUN. |
| 0000310252L | VITE M8 X 16 10.9 UNI 5933 T SV.PIA.ES.I. BRUN. |
| 0000310363E | VITE M12 X 25 10.9 UNI 5933 T SV.PIA.ES.I. BRUN. |
| 0000310485D | VITE M16 X 40 10.9 UNI 5933 T SV.PIA.ES.I. BRUN. |
| 0000316312D | PRIGIONIERO M10 X 50 8.8 UNI 5911 RAD.MEDIA BRUN |
| 0000316523B | PRIGIONIERO M10 X 40 8.8 UNI 5914 RAD.LUNGA BRUN. |
| 0000316525F | PRIGIONIERO M10 X 40 8.8 UNI 5911 RAD.MEDIA BRUN. |
| 0000316533C | PRIGIONIERO M10 X 25 8.8 UNI 5911 RAD.MEDIA BRUN. |
| 0000600476F | CINGHIA PIATTA 50 1950 A-2 HABASIT |
| 0000601013E | BOCCOLA AUTOL. BZ.SINT 20X24X20 |
| 0000601020L | BOCCOLA AUTOL. BZ.SINT 15X20X20 |
| 0000601060D | BOCCOLA AUTOL. BZ.SINT 20X24X20 DC=28X2 |
| 0000601070E | BOCCOLA BZ.SINT.AUTOL.12X14X10 KU-WERKSTOFF |
| 0000601113G | BOCCOLA AUTOL. BZ.SINT 25X30X30 |
| 0000601156H | BOCCOLA AUTOL. FE.PTFE 18X20X25 |
| 0000601224C | BOCCOLA AUTOL. BZ.SINT 35X40X30 |
| 0000601248D | BOCCOLA AUTOL. TEFLONATA 20X24X20 CB85-202420 MBI |
| 0000601446D | BOCCOLA AUTOL. FE.PTFE 20X23X25 |

| Codice/Code | Descrizione/Descr./Beschr./Denom. |
|---|---|
| 0000602055E | CATENA ISO 06B-1 3/8X7/32 54 -P CH.MOL P.DIR |
| 0000602186C | CATENA ISO 06B-1 3/8X7/32 64 - P CH.MOL P.DIR |
| 0000602214C | CATENA ISO 06B-1 3/8X7/32 149 -P CH.MOL P.DIR |
| 0000602865D | CATENA ISO 06B-1 3/8X7/32 51 -P CH.MOL P.DIR |
| 0000603346D | CINGHIA TRAP.3V 335 PIRELLI KOMP.9,5X8 SV.EST. 850 |
| 0000603347F | CINGHIA TRAP.3V 355 PIRELLI KOMP.9,5X8 SV.EST. 900 |
| 0000603360C | CINGHIA TRAP.3V 265 PIRELLI KOMP.9,5X8 SV.EST.675 |
| 0000603361E | CINGHIA TRAP 3V 250 9,5X8 SV.E=635 |
| 0000603365D | CINGHIA TRAP 3V 315 9,5X8 SV.E=800 |
| 0000603367H | CINGHIA TRAP 3V 355 9,5X8 SV.E=90 |
| 0000603506D | CINGHIA TRAP X VARIAT. 28X8 SV.I=750 |
| 0000603783A | CINGHIA TRAP 7M 925 TERNA POLIFLEX GATES |
| 0000604041G | CINGHIA PIATTA 50 1050 A-2 HABASIT |
| 0000604046H | CINGHIA PIATTA 50 1190 NE22 ESBAND |
| 0000604053C | CINGHIA PIATTA 50 980 NE22 ESBAND |
| 0000604057B | CINGHIA PIATTA 50 1280 NE22 ESBAND |
| 0000604133C | CINGHIA PIATTA 50 1850 S-141 HABASIT |
| 0000604151A | CINGHIA PIATTA 50 910 NE22 ESBAND |
| 0000604152C | CINGHIA PIATTA 50 950 NE22 ESBAND |
| 0000604202L | CINGHIA DENTATA 455 AT5 25 SYNCHROFLEX A+P |
| 0000604327E | CINGHIA DENTATA 255 L 100 |
| 0000604352G | CINGHIA DENTATA 420 H 200 |
| 0000604357H | CINGHIA DENTATA 300 H 100 |
| 0000604381H | CINGHIA DENTATA 322 L 075 |
| 0000604382A | CINGHIA DENTATA 285 L 100 |
| 0000604389F | CINGHIA DENTATA 300 L 075 |
| 0000605112L | CINGHIA DENTATA 390 H 200 |
| 0000605363B | CINGHIA PIATTA 40 1280 A-2 HABASIT |
| 0000605364D | CINGHIA PIATTA 40 1500 A-2 HABASIT |
| 0000605365F | CINGHIA PIATTA 40 1600 A-2 HABASIT |
| 0000605366H | CINGHIA PIATTA 50 1545 A-2 HABASIT |
| 0000605367A | CINGHIA PIATTA 50 1640 A-2 HABASIT |
| 0000605368C | CINGHIA PIATTA 40 1190 A-2 HABASIT |
| 0000605369E | CINGHIA PIATTA 40 980 A-2 HABASIT |
| 0000605370F | CINGHIA PIATTA 40 910 A-2 HABASIT |
| 0000605371H | CINGHIA PIATTA 40 1050 A-2 HABASIT |
| 0000605372A | CINGHIA PIATTA 40 950 A-2 HABASIT |
| 0000605388E | CINGHIA PIATTA 40 1800 A-2 HABASIT |
| 0000605389G | CINGHIA PIATTA 50 1800 A-2 HABASIT |
| 0000605577F | CINGHIA DENTATA 1500 15 ROSSA MFX+TX-3MM MEGADYNE |
| 0000606009C | CUSC.RAD.RIG.1C SFERE 25X52X15 6205 2Z |

| Codice/Code | Descrizione/Descr./Beschr./Denom. |
|---|---|
| 0000606038D | CUSC.RAD.RIG.1C SFERE 15X35X11 6202 2RS |
| 0000606040G | CUSC.RAD.RIG.1C SFERE 15X32X9 6002 2RS |
| 0000606100E | CUSC.RAD.RIG.1C SFERE 20X42X12 6004 2RS |
| 0000606102L | CUSC.RAD.RIG.1C SFERE 30X55X13 6006 2RS |
| 0000606109E | CUSC.RAD.RIG.1C SFERE 20X47X14 6204 2RS |
| 0000606111H | CUSC.RAD.RIG.1C SFERE 30X62X16 6206 2RS |
| 0000606112A | CUSC.RAD.RIG.1C SFERE 35X72X17 6207 2RS |
| 0000606139H | CUSC.RAD.RIG.1C SFERE 55X90X18 6011 DT (COPPIA) |
| 0000606165C | CUSC.RAD.RIG.1C SFERE 40X90X23 6308 2Z F700 SNR |
| 0000606170C | CUSC.RAD.RIG.1C SFERE 55X90X18 6011 |
| 0000606178A | CUSC.RAD.RIG.1C SFERE 35X72X17 6207 2Z |
| 0000606186G | CUSC.RAD.RIG.1C SFERE 8X22X7 608 2RS |
| 0000606205H | CUSC.RAD.RIG.1C SFERE 45X75X16 6009 2RS |
| 0000606216B | CUSC.RAD.RIG.1C SFERE 50X80X16 6010 2Z |
| 0000606227E | CUSC.RAD.RIG.1C SFERE 15X24X5 61802 |
| 0000606244A | CUSC.RAD.RIG.1C SFERE 20X42X12 6004 2RS 2'S |
| 0000608108E | CUSC.ALTA P. 20X52X15 7304-BECB-P "<>" SKF |
| 0000608161F | CUSC.ALTA P. 50X90X20 B7210CTPAP4 "<<" FAG |
| 0000609068A | CUSC.ALTA P. 55X90X18 B7011C-TPA-P4 "<<" FAG |
| 0000609101A | ASTUCCIO A RULLINI 16x22x20 HK 2RS INA |
| 0000609149C | CUSC.RAD.A RULLINI 42X55X20 RNA-49 2RS 07 INA |
| 0000609241G | GUARNIZIONE X CUSC.A RULLINI G 30X37X4 INA |
| 0000609309C | ASTUCCIO A RULLINI 50X58X22 HK RS INA |
| 0000610062L | MOLLA PNE. 145 INT. 385,0 1000 NM 084883 STABILUS |
| 0000610081L | MOLLA PNE. 145 INT. 385,0 1300 NM 1324FA STABILU |
| 0000613022H | RALLA AS 8X21X1 0821 INA |
| 0000613029D | GABBIA ASSIALE A RULLINI AXK .1226 INA |
| 0000613033B | GABBIA ASSIALE A RULLINI AXK .3047 INA |
| 0000613034D | RALLA AS 30X47X1 3047 INA |
| 0000613040F | GABBIA ASSIALE A RULLINI AXK .1730 INA |
| 0000613041H | GABBIA ASSIALE A RULLINI AXK .2035 INA |
| 0000613044E | RALLA AS 17X30X1 1730 INA |
| 0000613045G | RALLA AS 20X35X1 2035 INA |
| 0000613046L | RALLA AS 50X70X1 5070 INA |
| 0000613048D | GABBIA ASSIALE A RULLINI AXK .2542 INA |
| 0000613050G | RALLA AS 25X42X1 2542 INA |
| 0000613073F | RALLA AS 10X24X1 1024 INA |
| 0000613086D | RALLA CP 20X34,5X1,2 2035 NADELLA |
| 0000613114D | BOCCOLA AUTOL. FE.PTFE 15X17X15 |
| 0000613129F | BOCCOLA AUTOL. FE.PTFE 15X17X25 |
| 0000613199D | BOCCOLA AUTOL. FE.PTFE 18X20X15 |

| Codice/Code | Descrizione/Descr./Beschr./Denom. |
|---|---|
| 0000613375G | RALLA AS 12X26X1 1226 INA |
| 0000613502G | GABBIA ASSIALE A RULLINI AXK .5070 INA |
| 0000613613C | RUOTA LIBERA 25 X 52 X 15 TIPO AS GERIT |
| 0000616033E | INGRASS. VERTIC. ES.11 G1/8 46-A CAM |
| 0000616034G | INGRASS. VERTIC. ES.7 M6 45-7 CAM |
| 0000616057F | ATTACCO FLESSIB. L=400 15 CAM |
| 0000616058H | TESTINA HYDRAULIC REG. M10X1 22 CAM |
| 0000617201C | ANELLO 54,8X46,9X0,5X2 4 ONDE EL.DI COMPENS BRUN |
| 0000617477H | ANELLO 54,8X46,9X0,5X3,5 4 ONDE EL.DI COMPENS BRUN |
| 0000617680H | MOLLA TAZZA 80 X 41 X 3 BRUN |
| 0000617753D | MOLLA TAZZA 71,5 X 50,5 X 0,7 BRUN |
| 0000617759G | MOLLA TAZZA 89,5 X 65,5 X 0,9 BRUN |
| 0000619081L | LEVA A RIPRESA M10 40 523-83 |
| 0000619532G | LEVA A RIPRESA M8 25 523-65 |
| 0000619669H | MANIGLIA FISSA M8 226-151 BOTECO |
| 0000619710E | LEVA A RIPRESA M8 16 523-65 |
| 0000622010D | SFERA ACCIAIO D=7,938 C.P.-III- |
| 0000622014C | SFERA ACCIAIO D=11,112 C.P.-III- |
| 0000622018B | SFERA ACCIAIO D=14,288 C.P.-III- |
| 0000626025A | CERNIERA X CIL. A.FEMM. 40 1320-40-08F PNEUMAX |
| 0000626058A | CHIAVE PER SERRATURA "BOX TRIANGOLO" 2412 GIU |
| 0000626553A | SUPPORTO FINEC.X CIL. 1260-32-F PNEUMAX |
| 0000628003F | M.POMPA TRIF 220/380 50/60 |
| 0000628011C | M.POMPA TRIF 330/575 60 |
| 0000629131H | FORCELLA X STELO CIL 25/32 |
| 0000629141L | FORCELLA X CIL. F.C/CLIP M10X1,25 NORME SCM |
| 0000629291G | CERNIERA X CIL. P.FEM+PER. 50 1320-50-09F PNEUMAX |
| 0000631213F | GUIDA C/PATTINO SFERE HSR25B2SSCO+310IIG28 THK |
| 0000635003E | INDIC. NUM. FIAMA OP5 A 1G=2,5 DX F=20 G |
| 0000635004G | INDIC. NUM. FIAMA OP5 A 1G=2,5 DX F=20 G POLLICI |
| 0000635035C | INDIC. NUM. FIAMA OP5 A 1G=2,0 DX F=20 G |
| 0000635036E | INDIC. NUM. FIAMA OP5 A 1G=2,0 SX F=20 G |
| 0000635038L | INDIC. NUM. FIAMA OP5 A 1G=2,0 SX F=20 G POLLICI |
| 0000635039B | INDIC. NUM. FIAMA OP5 A 1G=5,0 DX F=20 G |
| 0000635053A | INDIC. NUM. FIAMA OP5 A 1G=10,0 DX F=20 G |
| 0000635055E | INDIC. NUM. FIAMA OP5 A 1G=4,0 DX F=20 G |
| 0000635137L | INDIC. NUM. FIAMA OP5 A 1G=2,0 DX F=20 G POLL 3DEC |
| 0000635139D | INDIC. NUM. FIAMA OP5 A 1G=5,0 DX F=20 G POLL 3DEC |
| 0000635142L | INDIC. NUM. FIAMA OP5 A 1G=10,0 DX F=20 G POLL 3DE |
| 0000635143B | INDIC. NUM. FIAMA OP5 A 1G=4,0 DX F=20 G POLL 3DEC |
| 0000635239F | INDIC. NUM. FIAMA OP5 B 1G=1,5 SX F=20 G |

| Codice/Code | Descrizione/Descr./Beschr./Denom. |
|---|---|
| 0000635255L | INDIC. NUM. FIAMA OL2I ALB.RETRO C 1G=6,0 SX |
| 0000635264H | INDIC. NUM. FIAMA OL2I ALB.RETRO C 1G=6,0 SX POLL |
| 0000635270A | INDIC. NUM. FIAMA OP5 A 1G=5,0 DX F=20 G POLL 2 DE |
| 0000635321L | INDIC. NUM. FIAMA OP12R A 1G=4,0/2,0 DX DX F=20 G |
| 0000635322B | INDIC. NUM. FIAMA OP5 B 1G=1,5 SX F=20 G POLL 2DE |
| 0000635324F | INDIC NUM FIAMA OP12R A 1G=4,0/2,0 DX DX F=20 G P |
| 0000636104A | PULEGGIA ESP COND. D=24 CV=1/6,5 F 150B BERGES |
| 0000636538B | PULEGGIA ESP MOTR. D=28 CV=1/6,5 R 150B BERGES |
| 0000637058D | RIDUT. BONF. MVF44F R=1/35 PAM11/90 |
| 0000637061L | RINVIO ANG.X TRASMIS.FLES. R=1/1 66/2 FIAMA |
| 0000638175C | RIDUTTORE BONF.VF 44F R=1/35 VMB |
| 0000638615G | RIDUT. BONF. MVF30F R=1/20 PAM11/90 |
| 0000639207C | RIDUT. BONF. MVF44F R=1/14 PAM11/90 |
| 0000639401D | RIDUT. BONF. MVF44F R=1/70 PAM11/90 |
| 0000640004D | TAPPO A SCATTO 32 PLAST. DP1250 HEYCO |
| 0000640018D | TAPPO A SCATTO 30 PLAST. DP1187 HEYCO |
| 0000640019F | TAPPO A SCATTO 17,5 PLAST. DP687 HEYCO |
| 0000640034G | TAPPO A SCATTO 38 PLAST. DP1500 HEYCO |
| 0000640036B | TAPPO A SCATTO 12,7 PLAST. DP500 HEYCO |
| 0000640054L | NYLON PA11 RILSAN TUBO 4X6 NERO |
| 0000640178C | CAVO FLESSIB.PER INDICAT.NUM.VICTOR D=5 |
| 0000640190G | DADO M10 8G UNI 5531 QUADRO X SCAN.T B.QUADRA BRUN |
| 0000640226E | CAVO FLESSIB.PER INDICAT.NUM.VICTOR D=3,2 |
| 0000640385B | TUBO ASP. POL.TRASP. SPIR. ACC. D= 80 DB-PL D.B. |
| 0000640402H | NYLON PA11 RILSAN TUBO 2,5X4 NEUTRO |
| 0000640677B | TAPPO LISCIO T.PIANA DC=75 DT=83 PLAST. 910-3223 K |
| 0000640963H | RIDUT. BONF. VF44F R=1/70 STD BISP |
| 0000640979C | RIDUT. BONF. MVF44F R=1/14 PAM11/90 FOC |
| 0000641080E | TIRANTE M10X40 UNI 6058 OCCHIO ESTR.PIANA |
| 0000641178D | RIDUT. BONF VF30 F2-30 HS B3 |
| 0000641179F | RIDUT. BONF VF30 F2-30 P63 B5 B3 RB |
| 0000641309C | CURVA 90° IDR.FEM/FEM 1/4" A.P. |
| 0000641310D | TUBO IDR. (D=12/D=7) SAE 100 R7 A.P. |
| 0000641626E | RIDUT. BONF VF44F2-35-P71-B14-B6 -RB PAM14/105 ST |
| 0000644033L | ANELLO 32,0 UNI 7437 EL.DI SICUR FORO |
| 0000644036F | ANELLO 35,0 UNI 7437 EL.DI SICUR FORO |
| 0000644037H | ANELLO 36,0 UNI 7437 EL.DI SICUR FORO |
| 0000644043A | ANELLO 42,0 / UNI 7437 EL.DI SICUR X FORO |
| 0000644048B | ANELLO 47,0 UNI 7437 EL.DI SICUR FORO |
| 0000644056H | ANELLO 55,0 UNI 7437 EL.DI SICUR FORO |
| 0000644062A | ANELLO 62,0 UNI 7437 EL.DI SICUR FORO |

| Codice/Code | Descrizione/Descr./Beschr./Denom. |
|---|---|
| 0000644071L | ANELLO 72,0 UNI 7437 EL.DI SICUR FORO |
| 0000644074F | ANELLO 75,0 UNI 7437 EL.DI SICUR FORO |
| 0000644256C | ANELLO 8,0 UNI 7435 EL.DI SICUR ALB. |
| 0000644260A | ANELLO 12,0 UNI 7435 EL.DI SICUR ALB. |
| 0000644263G | ANELLO 15,0 UNI 7435 EL.DI SICUR ALB. |
| 0000644264L | ANELLO 16,0 UNI 7435 EL.DI SICUR ALB. |
| 0000644268H | ANELLO 20,0 UNI 7435 EL.DI SICUR ALB. |
| 0000644272F | ANELLO 24,0 UNI 7435 EL.DI SICUR ALB. |
| 0000644273H | ANELLO 25,0 UNI 7435 EL.DI SICUR ALB. |
| 0000644278L | ANELLO 30,0 UNI 7435 EL.DI SICUR ALB. |
| 0000644290D | ANELLO 42,0 UNI 7435 EL.DI SICUR ALB. |
| 0000644292H | ANELLO RASCHIATORE G 25 X 35 X 4 |
| 0000645005B | LINGUETTA 4X4 X 20 A ARROTONDATA UNI 6604 |
| 0000645015C | LINGUETTA 6X6 X 45 A ARROTONDATA UNI 6604 |
| 0000645018L | LINGUETTA 6X6 X 70 A ARROTONDATA UNI 6604 |
| 0000645020C | LINGUETTA 8X7 X 20 B DIRITTA UNI 6604 |
| 0000645043B | LINGUETTA 8X7 X 20 A ARROTONDATA UNI 6604 |
| 0000645045F | LINGUETTA 6X6 X 25 A ARROTONDATA UNI 6604 |
| 0000645047A | LINGUETTA 6X6 X 20 A ARROTONDATA UNI 6604 |
| 0000645048C | LINGUETTA 5X5 X 20 A ARROTONDATA UNI 6604 |
| 0000645053C | LINGUETTA 8X7 X 15 B DIRITTA UNI 6604 |
| 0000645054E | LINGUETTA 8X7 X 30 B DIRITTA UNI 6604 |
| 0000645059F | LINGUETTA 6X6 X 30 A ARROTONDATA UNI 6604 |
| 0000645062B | LINGUETTA 5X5 X 25 B DIRITTA UNI 6604 |
| 0000645073E | LINGUETTA 10x8x25 A UNI 6604 |
| 0000645092E | LINGUETTA 5X5 X 25 A ARROTONDATA UNI 6604 |
| 0000645098H | LINGUETTA 8X7 X 90 A ARROTONDATA UNI 6604 |
| 0000645159H | LINGUETTA 8X7 X 75 A ARROTONDATA UNI 6604 |
| 0000645169L | LINGUETTA 10X8 X 35 A ARROTONDATA UNI 6604 |
| 0000645184A | LINGUETTA 6X6 X 16 A ARROTONDATA UNI 6604 |
| 0000645308E | LINGUETTA 6X6 X 55 A ARROTONDATA UNI 6604 |
| 0000645324H | LINGUETTA 5X5 X 45 A ARROTONDATA UNI 6604 |
| 0000646025E | COPIGLIA A MOLLA D=4 (A ERRE) CADM |
| 0000702331B | GUARNIZIONE X ALBERO ROT. AS 30X40X7 A+P |
| 0000704016F | GUARNIZIONE OR 3043 10,78 X 2,62 HS70 |
| 0001302053L | FINECORSA FK-320 PIZ NORM. COMPLETO |
| 0001304320H | CONNETTORE C/CAVO MT5 X FINEC.X CIL. C2 PNEUMAX |
| 0001306100D | PLAFONIERA BRIK941NE DULUX NOEN OSR 1X 9 W. |
| 0001307353B | FINECORSA D4MB-441G OMR MULTIPLO |
| 0001307745D | FINECORSA XCK-P118 TEL NORM. COMPLETO |
| 0001307764D | FINECORSA XCM-A1102 TEL NORM. COMPLETO |

| Codice/Code | Descrizione/Descr./Beschr./Denom. |
|---|---|
| 0001307905D | FINECORSA FR-530A PIZ NORM. COMPLETO |
| 0001307924D | FINECORSA FR-5151A PIZ NORM. COMPLETO |
| 0001307992G | FINECORSA XCM-A1152 TEL NORM. COMPLETO |
| 0001308055A | FINECORSA BNS543B02D12611210 BAL MULTIPLO |
| 0001308100F | SUPPORTO FINEC.X CILINDRO PNE. 126040F PNEUMAX |
| 0001308332H | FINECORSA BNS543B03R12611211 BAL MULTIPLO |
| 0001308592L | FINECORSA FA4815-3 PIZ NORM. COMPLETO |
| 0001308647G | FINECORSA FA-4615 PIZ MICROINT. |
| 0001308695H | VALVOLA SELETTRICE M5 105-52-6-27 PNEUMAX |
| 0001308766L | INTERRUT. DI SICUREZZA FR 991A PIZZATO |
| 0001308846L | FINEC.x CIL. NO RS-UA (UNIV.C/LED) PNEUMAX |
| 0001309395C | FINECORSA K0118POV6 SEL PROXIMITI CAPACIT. |
| 0001314108B | MT 100 B3 P2 KW4 V400/690EU 50 MS |
| 0001314114D | MT 100 B3 P2 KW4 V440/760 50 MA |
| 0001314119E | MT 112 B3 P2 KW5,5 V440/760 50 MA |
| 0001314139G | MOTORE TRIF 100 B3 P2 KW4 V440/760 50 MS |
| 0001314165B | MOTORE TRIF 112 B3 P2 KW5,5 V440/760 50 MS |
| 0001314190D | MOTORE TRIF 132 B3 P2 KW7,5 V440/760 50 MS |
| 0001314196G | MT 132 B3 P2 KW7,5 V440/760 50 MA |
| 0001314355E | MT 80 B3 P4 KW0,55 V230/400EU 50 MA BISPORG. |
| 0001314384F | MT 132 B3 P2 KW13 V600/1038 60 MA |
| 0001314551A | MT 112 B3 P2 KW5,5 V400/690EU 50 MS |
| 0001315065A | MT 132 B3 P2 KW18 V600/1038 60 MA |
| 0001315066C | MT 132 B3 P2 KW18 V220/380 60 MS |
| 0001315067E | MT 132 B3 P2 KW18 V220/380 60 MA |
| 0001315068G | MT 132 B3 P2 KW18 V800 60 MA 12M |
| 0001315069L | MT 132 B3 P2 KW18 V380/660 60 MA |
| 0001315074L | MT 100 B3 P2 KW4,8 V800 60 MA 12M |
| 0001315093L | MT 132 B3 P2 KW13 V220/380 60 MS |
| 0001315102L | MOTORE TRIF 100 B3 P2 KW4,8 V575/995 60 MS |
| 0001315105F | MOTORE TRIF 100 B3 P2 KW4,8 V380/660 60 MS |
| 0001315106H | MT 100 B3 P2 KW4,8 V220/380 60 MA |
| 0001315107A | MOTORE TRIF 132 B3 P2 KW13 V800 60 MA 12M |
| 0001315109E | MT 100 B3 P2 KW4,8 V380/660 60 MA |
| 0001315110F | MT 100 B3 P2 KW4,8 V575/995 60 MA |
| 0001315115G | MT 132 B3 P2 KW9 V600/1038 60 MS |
| 0001315118D | MOTORE TRIF 100 B3 P2 KW4,8 V800 60 MS 12M |
| 0001315132C | MOTORE TRIF 112 B3 P2 KW6,6 V800 60 MS 12M |
| 0001315135L | MOTORE TRIF 112 B3 P2 KW6,6 V380/660 60 MS |
| 0001315152E | MT 112 B3 P2 KW6,6 V600/1038 60 MS |
| 0001315154L | MOTORE TRIF 132 B3 P2 KW9 V800 60 MS 12M |
| 0001315156D | MT 132 B3 P2 KW13 V600/1038 60 MS |
| 0001315162F | MOTORE TRIF 132 B3 P2 KW13 V220/380 60 MA |
| 0001315195F | MT 132 B3 P2 KW9 V380/660 60 MA |
| 0001315197A | MOTORE TRIF 112 B3 P2 KW6,6 V220/380 60 MS |
| 0001315199E | MT 132 B3 P2 KW13 V380/660 60 MA |
| 0001315222D | MOTORE TRIF 100 B3 P2 KW4,8 V220/380 60 MS |
| 0001315224H | MT 112 B3 P2 KW6,6 V380/660 60 MA |
| 0001315232E | MT 132 B3 P2 KW13 V800 60 MS 12M |
| 0001315234L | MT 132 B3 P2 KW18 V600/1038 60 MS |
| 0001315235B | MT 132 B3 P2 KW18 V800 60 MS 12M |
| 0001315236D | MT 132 B3 P2 KW18 V380/660 60 MS |
| 0001320284B | MT 132 B5 P2 KW18 V380/660 60 |
| 0001321019B | MT 132 B5 P2 KW13 V600/1038 60 |
| 0001321024B | MT 100 B5 P2 KW4,8 V380/660 60 |
| 0001321029C | MT 112 B5 P2 KW6,6 V380/660 60 |
| 0001321045F | MT 132 B5 P2 KW9 V380/660 60 |
| 0001321046H | MT 132 B5 P2 KW9 V440/760 60 |
| 0001321047A | MT 132 B5 P2 KW9 V600/1038 60 |
| 0001321059F | MT 132 B5 P2 KW9 V220/380 60 |
| 0001321067C | MT 132 B5 P2 KW13 V440/760 60 |
| 0001321071A | MT 100 B5 P2 KW4,8 V600/1038 60 |
| 0001321080L | MT 112 B5 P2 KW6,6 V600/1038 60 |
| 0001321126H | MT 100 B5 P2 KW4,8 V220/380 60 |
| 0001321127A | MT 100 B5 P2 KW4,8 V800 60 12M |
| 0001321141L | MT 112 B5 P2 KW6,6 V220/380 60 |
| 0001321142B | MT 112 B5 P2 KW6,6 V800 60 12M |
| 0001321143D | MT 132 B5 P2 KW9 V800 60 12M |
| 0001321167E | MT 100 B5 P2 KW4,8 V230/400 60 |
| 0001322201H | MT 112 B14S P4 KW4 V230/400EU 50 C/TER M10 V/FORZ |
| 0001322346F | MT 90 B5 P4 KW1,3 V346/600 60 |
| 0001323340D | MT 90 B5 P4 KW1,8 V230/460 60 12M |
| 0001323342H | MT 90 B5 P4 KW1,8 V346/600 60 |
| 0001330091D | MT 160 B5S P2 KW18,5 V400/690EU 50 FL300 |
| 0001330125G | MT 160 B5S P2 KW18,5 V230/400EU 50 FL300 |
| 0001330126L | MT 160 B5S P2 KW22 V220/380 60 FL300 |
| 0001330127B | MT 160 B5S P2 KW22 V800 60 12M FL300 |
| 0001330228F | MT 160 B5S P2 KW22 V380/660 60 FL300 |
| 0001331011F | MTFECC 112 B5 P2 KW6,6 V800 60 F220V 12M |
| 0001331012H | MTFECC 112 B5 P2 KW6,6 V380/660 60 F220V |
| 0001331013A | MTFECC 112 B5 P2 KW6,6 V600/1038 60 F220V |
| 0001331014C | MTFECC 112 B5 P2 KW6,6 V220/380 60 F220V |

| Codice/Code | Descrizione/Descr./Beschr./Denom. |
|---|---|
| 0001331046A | MTFECC 71 B14S P2/8 KW0,3/0,11 V400EU 50 FL.P F220 |
| 0001331049G | MTFECC 112 B3 P2 KW6,6 V220/380 60 MA F380V |
| 0001331056B | MTFECC 112 B3 P2 KW6,6 V230/400 60 MA F220V |
| 0001331058F | MTFECC 132 B5 P2 KW9 V230/400 60 F220V |
| 0001331059H | MTFECC 132 B3 P2 KW9 V380/660 60 MA F220V |
| 0001331063F | MTFECC 132 B5 P2 KW9 V380/660 60 F220V |
| 0001331065A | MTFECC 132 B5 P2 KW9 V800 60 F220V 12M |
| 0001331066C | MTFECC 132 B5 P2 KW9 V600/1038 60 F220V |
| 0001331067E | MTFECC 132 B5 P2 KW9 V220/380 60 F220V |
| 0001331080B | MTFECC 112 B5 P2 kW6,6 V440/760 60 F220V |
| 0001331084A | MTFECC 132 B3 P2 KW11 V400/690EU 50 MD F220V |
| 0001331088L | MTFECC 132 B3 P2 KW15 V440/760 50 MA F220V |
| 0001331089B | MTFECC 132 B3 P2 KW11 V440/760 50 MS F220V |
| 0001331094B | MTFECC 132 B3 P2 KW11 V230/400EU 50 MS F220V |
| 0001331095D | MTFECC 132 B3 P2 KW11 V400/690EU 50 MS F220V |
| 0001331096F | MTFECC 132 B3 P2 KW13 V600/1038 60 MS F220V |
| 0001331097H | MTFECC 132 B3 P2 KW13 V800 60 MS F220V 12M |
| 0001331098A | MTFECC 132 B3 P2 KW13 V220/380 60 MS F220V |
| 0001331099C | MTFECC 132 B3 P2 KW15 V440/760 50 MS F220V |
| 0001331101G | MTFECC 132 B3 P2 KW18 V800 60 MS F220V 12M |
| 0001331108C | MTFECC 132 B5 P2 KW13 V230/400 60 F220V |
| 0001331109E | MTFECC 132 B3 P2 KW18 V600/1038 60 MS F220V |
| 0001331113C | MTFECC 132 B3 P2 KW18 V220/380 60 MS F220V |
| 0001331119F | MTFECC 132 B5 P2 KW13 V800 60 F220V 12M |
| 0001331120G | MTFECC 132 B5 P2 KW13 V600/1038 60 F220V |
| 0001331121L | MTFECC 132 B5 P2 KW13 V220/380 60 F220V |
| 0001331137D | MTFECC 100 B3 P2 KW4,8 V230/400 60 MA F220V |
| 0001331153G | MTFECC 100 B3 P2 KW4 V440/760 50 MA F220V |
| 0001331156D | MTFECC 100 B3 P2 KW4,8 V800 60 MA F220V 12M |
| 0001331157F | MTFECC 100 B3 P2 KW4,8 V600/1038 60 MA F220V |
| 0001331158H | MTFECC 100 B3 P2 KW4,8 V220/380 60 MA F220V |
| 0001331166E | MTFECC 132 B3 P2 KW13 V230/400 60 MS F230V |
| 0001331174B | MTFECC 100 B3 P2 KW4 V440/760 50 MS F220V |
| 0001331177H | MTFECC 100 B3 P2 KW4,8 V800 60 MS F220V 12M |
| 0001331178A | MOTORE FECC 100 B3 P2 KW4,8 V600/1038 60 MS F220 |
| 0001331179C | MTFECC 100 B3 P2 KW4,8 V220/380 60 MS F220V |
| 0001331200G | MTFECC 132 B3 P2 KW13 V380/660 60 MS F220V |
| 0001331204F | MOTORE FECC 112 B3 P2 KW5,5 V440/760 50 MA F220V |
| 0001331207C | MTFECC 100 B3 P2 KW4,8 V380/660 60 MA F220V |
| 0001331208E | MTFECC 132 B5 P2 KW13 V380/660 60 F220V |
| 0001331209G | MTFECC 112 B3 P2 KW6,6 V800 60 MA F220V 12M |

| Codice/Code | Descrizione/Descr./Beschr./Denom. |
|---|---|
| 0001331211A | MTFECC 112 B3 P2 KW6,6 V600/1038 60 MA F220V |
| 0001331212C | MTFECC 112 B3 P2 KW6,6 V220/380 60 MA F220V |
| 0001331223F | MOTORE FECC 132 B3 P2 KW7,5 V440/760 50 MA F220V |
| 0001331226C | MTFECC 132 B3 P2 KW9 V800 60 MA F220V 12M |
| 0001331227E | MTFECC 132 B3 P2 KW9 V600/1038 60 MA F220V |
| 0001331228G | MOTORE FECC 132 B3 P2 KW9 V220/380 60 MA F220V |
| 0001331229L | MTFECC 132 B3 P2 KW9 V230/400 60 MA F220V |
| 0001331238H | MOTORE FECC 132 B3 P2 KW11 V440/760 50 MA F220V |
| 0001331242F | MOTORE FECC 132 B3 P2 KW13 V800 60 MA F220V 12M |
| 0001331243H | MOTORE FECC 132 B3 P2 KW13 V600/1038 60 MA F220V |
| 0001331244A | MOTORE FECC 132 B3 P2 KW13 V220/380 60 MA F220V |
| 0001331250C | MTFECC 132 B3 P2 KW7,5 V440/760 50 MS F220V |
| 0001331253L | MOTORE FECC 132 B3 P2 KW9 V800 60 MS F220V 12M |
| 0001331254B | MOTORE FECC 132 B3 P2 KW9 V600/1038 60 MS F220V |
| 0001331255D | MOTORE FECC 132 B3 P2 KW9 V220/380 60 MS F220V |
| 0001331256F | MOTORE FECC 132 B3 P2 KW9 V380/660 60 MS F220V |
| 0001331270E | MTFECC 112 B3 P2 KW5,5 V440/760 50 MS F220V |
| 0001331273B | MTFECC 112 B3 P2 KW6,6 V800 60 MS F220V 12M |
| 0001331274D | MOTORE FECC 112 B3 P2 KW6,6 V600/1038 60 MS F220 |
| 0001331275F | MTFECC 112 B3 P2 KW6,6 V380/660 60 MS F220V |
| 0001331276H | MOTORE FECC 112 B3 P2 KW6,6 V220/380 60 MS F220V |
| 0001331554H | MTFECC 132 B3 P2 KW18 V800 60 MA F220V 12M |
| 0001331555A | MTFECC 132 B3 P2 KW18 V600/1038 60 MA F220V |
| 0001331556C | MTFECC 132 B3 P2 KW18 V220/380 60 MA F220V |
| 0001331610G | MTFECC 100 B5 P2 KW4,8 V230/400 60 F220V |
| 0001331664B | MTFECC 100 B5 P2 KW4,8 V800 60 F220V 12M |
| 0001331665D | MTFECC 100 B5 P2 KW4,8 V600/1038 60 F220V |
| 0001331666F | MTFECC 100 B5 P2 KW4,8 V220/380 60 F220V |
| 0001331768C | MT 132 B5 P2 KW18 V440/760 60 |
| 0001334185H | MT 132 B3 P2 KW9 V380/660 60 MS |
| 0001334193E | MOTORE TRIF 132 B3 P2 KW9 V220/380 60 MA |
| 0001334195L | MOTORE TRIF 132 B3 P2 KW9 V600/1038 60 MA |
| 0001334198F | MOTORE TRIF 132 B3 P2 KW9 V220/380 60 MS |
| 0001334199H | MOTORE TRIF 132 B3 P2 KW9 V800 60 MA 12M |
| 0001336015A | MT 132 B5 P2 KW13 V220/380 60 |
| 0001336018G | MT 132 B5 P2 KW13 V380/660 60 |
| 0001336054C | MT 132 B5 P2 KW13 V800 60 12M |
| 0001336254G | MT 112 B5 P2 KW5,5 V230/400EU 50 C/TER V/FORZ 220 |
| 0001336313C | MT 112 B3 P4 KW5,5 V230/400EU 50 MS C/TER IVT V/FO |
| 0001336315G | MT 132 B3 P4 KW7,5 V230/400EU 50 MS C/TER IVT V/F |
| 0001337014L | MTFECC 160 B5S P2 KW18,5 V230/400EU 50 FL300 F220V |

| Codice/Code | Descrizione/Descr./Beschr./Denom. |
|---|---|
| 0001337015B | MTFECC 160 B5S P2 KW18,5 V400/690EU 50 FL300 F220V |
| 0001337016D | MTFECC 160 B5S P2 KW22 V220/380 60 FL300 F220V |
| 0001337017F | MTFECC 160 B5S P2 KW22 V800 60 FL300 F220V 12M |
| 0001337018H | MTFECC 160 B5S P2 KW22 V600/1038 60 FL300 F220V |
| 0001337265B | MT 160 B5S P2 KW22 V600/1038 60 FL300 |
| 0001337516E | MT 132 B3 P2 KW13 V380/660 60 MS |
| 0001337670A | MT 112 B3 P2 KW5,5 V400/690EU 50 MA |
| 0001337679A | MT 100 B5 P2 KW4 V230/400EU 50 |
| 0001337680B | MT 100 B5 P2 KW4 V400/690EU 50 |
| 0001337715G | MT 112 B5 P2 KW5,5 V230/400EU 50 |
| 0001337716L | MT 112 B5 P2 KW5,5 V400/690EU 50 |
| 0001337717B | MT 132 B5 P2 KW7,5 V230/400EU 50 |
| 0001337718D | MT 132 B5 P2 KW7,5 V400/690EU 50 |
| 0001337719F | MT 132 B5 P2 KW11 V230/400EU 50 |
| 0001337720G | MT 132 B5 P2 KW11 V400/690EU 50 |
| 0001337721L | MT 132 B3 P2 KW7,5 V230/400EU 50 MA |
| 0001337722B | MT 132 B3 P2 KW7,5 V400/690EU 50 MA |
| 0001337727C | MT 132 B3 P2 KW11 V230/400EU 50 MA |
| 0001337728E | MT 132 B3 P2 KW11 V400/690EU 50 MA |
| 0001337730H | MTFECC 112 B3 P2 KW5,5 V230/400EU 50 MA F220V |
| 0001337738F | MT 132 B3 P2 KW15 V230/400EU 50 MA |
| 0001337739H | MT 132 B3 P2 KW15 V400/690EU 50 MA |
| 0001337746C | MTFECC 100 B5 P2 KW4 V230/400EU 50 F220V |
| 0001337747E | MTFECC 100 B5 P2 KW4 V400/690EU 50 F220V |
| 0001337748G | MTFECC 112 B5 P2 KW5,5 V230/400EU 50 F220V |
| 0001337749L | MTFECC 112 B5 P2 KW5,5 V400/690EU 50 F220V |
| 0001337753G | MTFECC 132 B5 P2 KW7,5 V230/400EU 50 F220V |
| 0001337754L | MTFECC 132 B5 P2 KW7,5 V400/690EU 50 F220V |
| 0001337755B | MTFECC 132 B5 P2 KW11 V230/400EU 50 F220V |
| 0001337756D | MTFECC 132 B5 P2 KW11 V400/690EU 50 F220V |
| 0001337757F | MTFECC 132 B3 P2 KW7,5 V230/400EU 50 MA F220V |
| 0001337758H | MTFECC 132 B3 P2 KW7,5 V400/690EU 50 MA F220V |
| 0001337759A | MTFECC 132 B3 P2 KW11 V230/400EU 50 MA F220V |
| 0001337760B | MTFECC 132 B3 P2 KW11 V400/690EU 50 MA F220V |
| 0001337763H | MTFECC 132 B3 P2 KW15 V230/400EU 50 MA F220V |
| 0001337764A | MTFECC 132 B3 P2 KW15 V400/690EU 50 MA F220V |
| 0001337791G | MTFE 71 B5 P4 KW0,37 V230/400EU 50 |
| 0001337793B | MTFECC 112 B3 P2 KW5,5 V400/690EU 50 MA F220V |
| 0001337805H | MT 100 B3 P2 KW4 V230/400EU 50 MA |
| 0001337806A | MT 100 B3 P2 KW4 V400/690EU 50 MA |
| 0001337808E | MTFECC 100 B3 P2 KW4 V230/400EU 50 MA F220V |
| 0001337809G | MTFECC 100 B3 P2 KW4 V400/690EU 50 MA F220V |
| 0001337814G | MT 112 B3 P2 KW5,5 V230/400EU 50 MA |
| 0001337816B | MT 112 B3 P2 KW6,6 V220/380 60 MA |
| 0001337817D | MT 112 B3 P2 KW6,6 V800 60 MA 12M |
| 0001337818F | MT 112 B3 P2 KW6,6 V600/1038 60 MA |
| 0001337831C | MT 132 B5 P2 KW15 V230/400EU 50 |
| 0001337832E | MT 132 B5 P2 KW15 V400/690EU 50 |
| 0001337834L | MT 132 B5 P2 KW18 V220/380 60 |
| 0001337835B | MT 132 B5 P2 KW18 V800 60 12M |
| 0001337836D | MT 132 B5 P2 KW18 V600/1038 60 |
| 0001337869D | MTFECC 132 B5 P2 KW15 V230/400EU 50 F220V |
| 0001337870E | MTFECC 132 B5 P2 KW15 V400/690EU 50 F220V |
| 0001337871G | MTFECC 132 B5 P2 KW18 V220/380 60 F220V |
| 0001337873B | MTFECC 132 B5 P2 KW18 V800 60 F220V 12M |
| 0001337874D | MTFECC 132 B5 P2 KW18 V600/1038 60 F220V |
| 0001337883C | MT 63 B14 P4 KW0,18 V230/400EU 50 |
| 0001337909L | MTFECC 90 B5S P2 KW2,2 V230/400EU 50 FL.P F220V |
| 0001337990L | MT 90 B5 P4 KW1,1 V230/400EU 50 |
| 0001338436F | MT 90 B5 P4 KW1,5 V230/400EU 50 |
| 0001338930D | MOTORE TRIF. 132 B3 P2 KW7,5 V400/690EU 50 MS |
| 0001338948C | MT 63 B5 P4 KW0,13 V230/400EU 50 |
| 0001338959F | MTFECC 100 B3 P2 KW4 V400/690EU 50 MS F220V |
| 0001338960G | MTFECC 100 B3 P2 KW4 V230/400EU 50 MS F220V |
| 0001338961L | MTFECC 112 B3 P2 KW5,5 V400/690EU 50 MS F220V |
| 0001338965H | MTFECC 112 B3 P2 KW5,5 V230/400EU 50 MS F220V |
| 0001338987E | MT 100 B3 P2 KW4 V230/400EU 50 MS |
| 0001338988G | MT 112 B3 P2 KW5,5 V230/400EU 50 MS |
| 0001338994L | MOTORE TRIF. 132 B3 P2 KW7,5 V230/400EU 50 MS |
| 0001338996D | MOTORE TRIF. 132 B3 P2 KW7,5 V230/400EU 50 F220V |
| 0001338997F | MOTORE TRIF. 132 B3 P2 KW7,5 V400/690EU 50 F220V |
| 0001338998H | MT 132 B3 P2 KW11 V400/690EU 50 MS |
| 0001339195E | MT 132 B3 P2 KW15 V400/690EU 50 MS |
| 0001339297B | MT 100 B14 P4 KW2,2 V230/400EU 50 |
| 0001339696H | MTFECC 100 B14 P4 KW2,2 V230/400EU 50 F220V |
| 0001339739A | MT 90 B5 P4 KW1,3 V230/460 60 |
| 0001339776H | MTFECC 112 B3 P2/4 KW4,5/3,7 V400EU 50 MD F230V |
| 0001339788D | MT 132 B3 P2 KW11 V230/400EU 50 MS |
| 0001339789F | MTFECC 132 B3 P2 KW15 V230/400EU 50 MS F220V |
| 0001339790G | MTFECC 132 B3 P2 KW15 V400/690EU 50 MS F220V |
| 0001339791L | MT 132 B3 P2 KW15 V230/400EU 50 MS |
| 0001340155C | CUSTODIA GV2-MC01 TEL |

| Codice/Code | Descrizione/Descr./Beschr./Denom. |
|---|---|
| 0001340156E | CUSTODIA GV2-E01 TEL |
| 0001340343B | CAMMA AZION. TCX-25-49 MUL |
| 0001340606A | MODULO DI TRASLAZ. AS/2-5A1-0.1TTL-O.02 LIKA |
| 0001340607C | BANDELLA MAGNETICA MB-XX-0.1 LIKA |
| 0001340688D | MTFECC 100 B14 P4 KW2,6 V600/1038 60 F220V |
| 0001340689F | MTFECC 100 B14 P4 KW2,6 V220/380 60 F220V |
| 0001340691L | MT 100 B14 P4 KW2,6 V380/660 60 |
| 0001340692B | MT 100 B14 P4 KW2,6 V600/1038 60 |
| 0001340693D | MT 100 B14 P4 KW2,6 V220/380 60 |
| 0001340694F | MT 100 B14 P4 KW2,6 V800 60 12M |
| 0001340695H | MTFECC 100 B14 P4 KW2,6 V800 60 F220V 12M |
| 0001340737H | MT 100 B14 P4 KW2,6 V230/460 60 |
| 0001341093B | MT 132 B3 P2 KW7,5 V230/400EU 50 MA V/FORZ 230 50 |
| 0001341094D | MT 132 B5 P2 KW7,5 V230/400EU 50 V/FORZ 230 50 |
| 0001341219A | MT 160 B5S P2 KW25 V400/690EU 50 FL300 E.A. |
| 0001342010G | INT.MAGN. GV2-M07 TEL 1,6-2,5A 3P |
| 0001342011L | INT.MAGN. GV2-M08 TEL 2,5-4A 3P |
| 0001342012B | INT.MAGN. GV2-M10 TEL 4-6A 3P |
| 0001342013D | INT.MAGN. GV2-M14 TEL 6-10A 3P |
| 0001343017D | INT.MAGN. GV2ME10 TEL 400V 15KW 4-6,3 3P |
| 0001344082B | E.VALV. 5/2 G1/8 V110 50/60 AC7500 UNIVER |
| 0001344087C | E.VALV. 3/2 G1/8 NC V110 50/60 AF2500 UNIVER |
| 0001344098F | E.VALV. 5/2 G1/8 V110 50/60 AC7520 UNIVER |
| 0001347084L | CONTAORE 45X45 V110/50 Z302 AEG |
| 0001347085B | CONTAORE 45X45 V110/60 Z302 AEG |
| 0001347189C | DADO X PRESSACAVO PG13,5 PLAST. |
| 0001347301A | FINECORSA ZCK-M1 TEL NORM. SOLO CORPO |
| 0001347321C | CAMMA AZION. TCX-10-34 MUL |
| 0001347322E | CAMMA AZION. TCX-00-24 MUL |
| 0001347324L | CAMMA AZION. TCY-63-95 MUL |
| 0001347498H | DADO X PRESSACAVO PG9 PLAST. |
| 0001347514C | DADO X PRESSACAVO 1/4 OT. |
| 0001347519D | DADO X PRESSACAVO PG16 PLAST. |
| 0001347586E | LEVA ANG.C/ROT. XCM-Z24 TEL |
| 0001352063B | PRESSACAVO DIR. PG13,5 AUTOEST. LAPP SKIN |
| 0001352064D | PRESSACAVO DIR. PG16 AUTOEST. LAPP SKIN. |
| 0001352111D | PRESSACAVO DIR. PG21 AUTOEST. LAPP SKIN. |
| 0001352115C | PRESSACAVO DIR. PG9 AUTOEST. LAPP SKIN. |
| 0001352751B | INVERTER TRIF 400VAC 11,00 KW GVX2000-11-TSL2 FUJ |
| 0001353149F | STAMPANTE LX-300 EPSON |
| 0001353217A | ETICH.ADESIVE 72X49 IN MODULO CONTINUO |

| Codice/Code | Descrizione/Descr./Beschr./Denom. |
|---|---|
| 0001354448B | LEVA REG.+ROT. ZCK-D41 TEL |
| 0001500035B | CIL.PNE 50 25 1511-50-25 PNEUMAX |
| 0001500053L | CERNIERA X CIL. P.MASC. 32 1320-32-09-1F PNEUMAX |
| 0001500316H | SUPPORTO FINEC.X CIL. 1260-16-F PNEUMAX |
| 0001500415H | VALVOLA 3/2 NC M5 105-32-6-1-2 PNEUMAX |
| 0001500562L | REGOLATORE G1/4 17109-B-C-SRM-G1/4 PNEUMAX |
| 0001500961F | CIL.PNE 50 25 1501-50-25 PNEUMAX |
| 0001501373L | CIL.PNE 40 25 ISO-VDMA DE P.MAGN |
| 0001501464C | CIL.PNE 25 100 ISO6432 DE |
| 0001501890F | CIL.PNE 32 25 ISO-VDMA DE P.MAGN |
| 0001502030C | CIL.PNE 32 75 1260-32-75-M PNEUMAX |
| 0001502033L | ATTUATORE PNEUMATICO X VALVOLA 718800 SP |
| 0001502050E | RIPARTITORE A 8 VIE BILATERALE M10X1 ILC 015430 |
| 0001502051G | RIPARTITORE 4V.F 1/8 ALL. |
| 0001502095A | VALVOLA 5/2 NC G1/8 228-52-11-1 PNEUMAX |
| 0001502104A | VALVOLA 5/2 NA G1/8 228-52-55-2 OPIF148 PNEUMAX |
| 0001502124C | CILINDRO PNE. 20 30 S8 DE 12602030 PNEUMAX |
| 0001502498F | VALVOLA 3/2 NC M5 705-32-2-1 PNEUMAX |
| 0001502627A | CIL.PNE 40 30 1501-40-30 PNEUMAX |
| 0001502713C | VALVOLA 2/3 NC G1/8 228.32.4.1 PNEUMAX |
| 0001502860D | CIL.PNE 80 100 1561-80-100-02-1 PNEUMAX |
| 0001502999L | CIL.PNE 16 250 ISO6432 DE P.MAGN 1260.16.250.M |
| 0001503029C | FILTRO G1/4 FIL-1/4-20-RMSA M.W. |
| 0001503268L | CIL.PNE BL.MEC 25 280 DE P.MAGN DSNU-25-280-PPVA- |
| 0001503331C | VALVOLA 3/2 NC G1/8 228-32-6-9 PNEUMAX |
| 0001503387B | LUBRIFICAT.NEBBIA 2VIE C/GENER.ILC700021 LUBETOOLS |
| 0001505004B | MANOMETRO 0-10 BAR 1/8 AS. D=40 |
| 0001505066C | MANOMETRO 0-12 BAR 1/8 AS. D=40 FL.ST. |
| 0001508113F | MOLT.PRES.1/4 1-20KGF/CM OMRB112A C/MANOMETRO PN |
| 0001508428E | POMPA MANUALE SERB.ALL.C2-ME FILTRO 80 MICRON ILC |
| 0001508824E | VALVOLA REG.FLUSSO UD G1/8 6-01-18-1 PNEUMAX |
| 0001508832B | VALVOLA REG.FLUSSO BD G1/8 6-01-18-2 PNEUMAX |
| 0001508845L | REGOLATORE G1/8 MR-BIT-1/8-04 M.W. |
| 0001508862E | VALVOLA ECONOMIZZATORE G1/4 AM-5351 UNIVER |
| 0001509058A | SUPPORTO FINEC.x CIL.1320-A PNEUMAX |
| 0001509130C | VALVOLA DI BLOCCO UD G1/4 XS197B UNIMET |
| 0001509131E | VALVOLA 5/2 G1/8 228-52-11-11 PNEUMAX |
| 0001509142H | VALVOLA 5/2 G1/8 228-52-6-27 PNEUMAX |
| 0001509516C | VALV.DI DOSAGGIO X DISTRIB. M10X1 026012 ILC |
| 0001509675L | VALVOLA 5/2 NO/NC M5 105-52-0-1 PNEUMAX |
| 0001509714C | VALVOLA SELETTRICE G1/8 6-04-18 PNEUMAX |

| Codice/Code | Descrizione/Descr./Beschr./Denom. |
|---|---|
| 0001900205G | NIPLO CIL 1/4 ZINC. NZ44 |
| 0001900206L | RACC.CON CODOLO G1/4 TUBO ALTA PRESS.1/4 04.116.3 |
| 0001902055A | VALVOLA 2/2 NO/NC G1/8 0446-04-10 LEGRIS |
| 0001902158L | RUB.SFE STD FM CIL 1/4 LEVA OT. |
| 0001903002L | PISTOLA SOFFIAT.ARIA COMPRESSA IN ALLUM.CANN.CORT |
| 0001904001H | RACC.BIC. DIR.M CIL 1/8 E4 OT. |
| 0001904061E | RACC.RAP. OR.ANELLO SEM.+VITE GIR. M5 E4 OT. |
| 0001904064B | RACC.CALZ. DIR.M CIL M12X1 E6 ACC. |
| 0001904116C | RACC.BIC. "L" M CON. 1/8 E4 OT. |
| 0001904155E | RACC.RAP. DIR.M CIL C/GUARN. 1/8 E4 OT. |
| 0001904160E | RACC.RAP. DIR.M CIL C/GUARN. 1/8 E6 OT. |
| 0001904525A | RACC.RAP. "T" E6 OT. |
| 0001904558A | RACC.RAP.2"L"M GIR.CON.1/8E4-E6 OT. |
| 0001905059C | RACC.RAP. "L" M GIR. CIL C/GUARN. 1/8 E4 OT. |
| 0001905110A | RACCORDO D'ESTREM.A L IN OT.1/8M TUBO 6 R15-M.WORK |
| 0001906029A | RACC."X" MFFF CON. 3/8 OT. |
| 0001906089G | RACC."L" MF CON. M12X1 ACC. 03-233-0 ILC |
| 0001908001C | RIDUZ.ES.ALT CIL 1/8 M 1/8 F OT. |
| 0001908005B | RIDUZ.ES.BAS CIL 1/4 M 1/8 F OT. |
| 0001908042L | SILENZIATORE 1/8 BZ. 1STT STIMA |
| 0001908155L | TAPPO M CIL M12X1 KEY EST. OT. 050120 ILC |
| 0001916014A | VALVOLA UNIDIREZIONALE M10X1 140500 ILC |
| 0002030123B | MOLT.PRES. ARIA OLIO 100.22.10RP ENERFLUID |
| 0002033488L | SERBATOIO 2,50 LT PSBC2,5 SAS |
| 0002038165L | CIL.PNE 40 75 DE MAGNETICO 1260-40-75 PNEUMAX |
| 0002203008G | CONTAMETRI AZZER.RAP.5 CIFRE H=6 MM CM-05-1/2 VICT |
| 0002319122H | CHIAVE 2 UNI 6753 MASCHIO ES. PIEG. |
| 0002319123A | CHIAVE 2,5 UNI 6753 MASCHIO ES. PIEG. |
| 0002319124C | CHIAVE 3 UNI 6753 MASCHIO ES. PIEG. |
| 0002319125E | CHIAVE 4 UNI 6753 MASCHIO ES. PIEG. |
| 0002319126G | CHIAVE 5 UNI 6753 MASCHIO ES. PIEG. |
| 0002319128B | CHIAVE 6 UNI 6753 MASCHIO ES. PIEG. |
| 0002319129D | CHIAVE 8 UNI 6753 MASCHIO ES. PIEG. |
| 0002319130E | CHIAVE 10 UNI 6753 MASCHIO ES. PIEG. |
| 0002319132L | CHIAVE 14 UNI 6753 MASCHIO ES. PIEG. |
| 0002319138C | CHIAVE 7 UNI 6753 MASCHIO ES. PIEG.LG |
| 0002319223C | CHIAVE 17 UNI 6741 A FORCH./POLIG. |
| 0002319377L | CHIAVE 22 UNI 6733 FORCH.SEMPL. |
| 0002319392A | CHIAVE 46 UNI 6733 FORCH.SEMPL. |
| 0002319426D | UNI 6736 CHIAVE 8X10 A FORCHETTA DOPPIA |
| 0002319435C | CHIAVE 13X17 UNI 6736 2 FORCH. |

| Codice/Code | Descrizione/Descr./Beschr./Denom. |
|---|---|
| 0002319443L | CHIAVE 19X24 UNI 6736 2 FORCH. |
| 0002341050C | CASSETTA ATTR. 460X220X210 5SCO. LAM. |
| 0002345506F | OLIATORE CANNA RIG. 200GR 63-B CAM |
| 0002347563H | SIRINGA A SPINTA 300 GR D=45 8591-TEST.PRESSOFUSA |
| 0002400034A | OLIO LUBRIF SPRAY LT 0,200 TEFLUB CRC |
| 0002400035C | OLIO LUBRIF SPRAY LT 0,400 METAFLUX 70/81 C/TUB |
| 0002401040D | GRASSO SPEC GR-MU-EP-0 AGIP |
| 0002402029C | OLIO IDRAULICO "ARNICA 46" |
| 0002402040E | OLIO LUBRIF SCORRILEGNO-0893070 WURTH |
| 0002402042L | OLIO LUBRIF OSO-46 AGIP |
| 0300924702E | MOLLA COMP.L=20 DE10,3 DF2,25 PER GUIDA SX SSET |
| 0300928001B | BOCCOLA 20X25X20 |
| 0300944604B | MOLLA |
| 0301230004F | MOLLA EL.CIL COMPR 1=DF 11,0 =DE 13,0 =LL |
| 0302110031L | TARGA "ZONA PERICOLO" 0,1 |
| 0302110049H | TARGA DI PERICOLO DA UTENS ILI 0,25 |
| 0302110050L | TARGA PERICOLO DA TRASMISSIONI 0,25 |
| 0302110057E | TARGA IMP.PNEUMATICO I-GB-F-D-E 100X100 0,25 |
| 0302110058G | TARGA IMP.PNEUMATICO I-GB-P-NL-GR 100,0 0,25 |
| 0302110059L | TARGA IMP.PNEUMATICO I-GB-S-DK-N-SF-ISL 100,0 0,2 |
| 0302110066D | TARGA PERICOLO TENSIONE ELETTRICA NORME USA 75X50 |
| 0302110069A | TARGA PERICOLO DA UTENSILI NORME USA 120X80 0,25 |
| 0302110070B | TARGA OBBLIGO USO OCCHIALI NORME USA 95X80 0,25 |
| 0302110071D | TARGA OBBLIGO USO CUFFIA NORME USA 95X80 0,25 |
| 0302110072F | TARGA ZONA DI PERICOLO NORME USA 120X80 0,25 |
| 0302110075C | TARGA PERICOLO DA TRASMIS. NORME USA 120X80 0,25 |
| 0302110080C | TARGA OBBLIGO GUANTI -USA- |
| 0302110184D | TARGA DI AVVERTENZA -ITALIANO- 200X250 0,5 |
| 0302110185F | TARGA DI AVVERTENZA -FRANCESE- |
| 0302110186H | TARGA DI AVVERTENZA -TEDESCO- |
| 0302110187A | TARGA AVVERTENZA -INGLESE- |
| 0302110188C | TARGA AVVERTENZA -SPAGNOLO- |
| 0302110192A | TARGA AVVERTENZA RUSSO 250X200 0,5 |
| 0302110195G | TARGA PER GANCIO DI SOLLEVAMENTO 30X45 0,1 |
| 0302110196L | TARGA AVVERTENZA IN DANESE 250X200 0,5 |
| 0302110197B | TARGA AVVERTENZA IN OLANDESE 250X200 0,5 |
| 0302110198D | TARGA AVVERTENZA IN SVEDESE 250X200 0,5 |
| 0302110199F | TARGA AVVERTENZA IN PORTOGHESE-INGLESE 250X200 0,5 |
| 0302110200H | TARGA AVVERTENZA IN GRECO-INGLESE 250X200 0,5 |
| 0302110201A | TARGA AVVERTENZA IN NORVEGESE-INGLESE 250X200 0,5 |
| 0302110202C | TARGA AVVERTENZA IN FINLANDESE-INGLESE 250X200 0,5 |

| Codice/Code | Descrizione/Descr./Beschr./Denom. |
|---|---|
| 0303041299G | MOLLA EL.CIL TRAZ 2=DF 15,0 =DE 69,0 =LL |
| 0306330203A | CHIAVE FISSA 13 TIPO SVIZZERA 0002319395 |
| 0310031017B | SUPPORTO SCARPETTA PRESSATRICE SU O.S. |
| 0310031018D | COMANDO SPOST.ASS. O.S. |
| 0310050002C | PERNO D=25 E=4 -BRUNITO- |
| 0310110462A | TARGA PER ALBERO TRAINO TELESCOPICO |
| 0310120319A | BOCCOLA 40 60 12 -BRUNITO- |
| 0310120331E | BOCCOLA 50 70 12 -BRUNITO- |
| 0310120332G | BOCCOLA 50 70 9,75 -BRUNITO- |
| 0310120352L | BOCCOLA 1 13/16" 67 -BRUNITO- |
| 0310120353B | BOCCOLA 1 13/16" 67 9,75 -BRUNITO- |
| 0310130104F | PERNO DI SCORRIMENTO COPERCHI-BRUNITO- |
| 0310130203F | LARDONE SCARPETTA PRESSATRICE SX |
| 0310130420F | ANELLO PARAPOLVERE |
| 0310130421H | GUARNIZIONE DE=85,4 S=2,5 L=3 P.U.90 SH. |
| 0310130604G | SCATOLA RINVIO SOLLEVAMENTO |
| 0310130632F | CHIOCCIOLA FLANG.TR.20X5 SX |
| 0310140102D | SEMISCATOLA DX PER TANDEM L=220 |
| 0310140103F | SEMISCATOLA SX PER TANDEM L=220 |
| 0310140104H | INGRANAGGIO OZIOSO PER TANDEM L=220 |
| 0310140110A | PERNO DI REGISTRAZIONE TANDEM -BRUNITO- |
| 0310140226G | RULLO TRASC.SUPER.ZIGRANATO H=20 |
| 0310140231G | RULLO TRASC.FLANGIATO H=20 |
| 0310150017F | PERNO INFERIORE |
| 0310170019E | LEVA MOVIMENTO GUIDA -BRUNITO- |
| 0310170028D | VITE REGOLAZIONE GUIDE |
| 0310180110L | PIATTO 40X15 L=90-BRUNITO- |
| 0310180111B | ESAGONO 17 L30 |
| 0310180112D | RUOTA X CONTAYARDS |
| 0310180114H | PERNO 15 26 |
| 0310180115A | RUOTA X CONTAMETRI |
| 0310190116E | VITE S.F. MA=2,5 2 PRINC.DX |
| 0310450901E | MOLLA EL.CIL COMPR 4=DF 27,0 =DE 128,0 =LL |
| 0310830314L | BOCCOLA 40 64 10 CON LINGUETTA |
| 0310830318H | ANELLO DISTANZIALE 40 H 7 --BRUNITO-- |
| 0310830319A | ANELLO DISTANZIALE 40 H 5 (BRUNITO) |
| 0310830320B | ANELLO DISTANZIALE 40 H=3 (BRUNITO) |
| 0310830331E | ANELLO DM.40X15 (BRUNITO) |
| 0310830332G | ANELLO DM.40X20 (BRUNITO) |
| 0310830333L | ANELLO DM.40X25 (BRUNITO) |
| 0310830802E | FLANGIA SUPERIORE PER ALBERO 40 |

| Codice/Code | Descrizione/Descr./Beschr./Denom. |
|---|---|
| 0310831201A | MOLLA EL.CIL COMPR 1=DF 8,0 =DE 20,0 =LL |
| 0310831300A | POMELLO PER BLOCCAGGIO |
| 0310837401B | CUFFIA VENTILAZIONE |
| 0310838300H | PERNO DI BLOCCAGGIO |
| 0310839363C | ANELLO DISTANZIALE 50 H=7 |
| 0310839365G | ANELLO DISTANZIALE 50 H=3 BRU |
| 0310839370G | ANELLO DM.50X15 (BRUNITO) |
| 0310839371L | ANELLO DM.50X20 (BRUNITO) |
| 0310839372B | ANELLO DM.50X25 (BRUNITO) |
| 0310839373D | ANELLO DM.50X5 (BRUNITO) |
| 0310858102C | BLOCCHETTO TENDI CINGHIA --( BRUNITO )-- |
| 0310864701B | SUPPORTO IN NYLON PER MICROINTERRUTTORE |
| 0310871309L | BOCCOLA 30 44 5 EX ANELLO |
| 0310871310A | ROSETTA 30 44 3 EX ANELLO |
| 0310871311C | BOCCOLA 30 44 7 EX ANELLO |
| 0310871500D | PERNO DI BLOCCAGGIO PER MOLTIPLICATORE |
| 0310871501F | BOCCOLA FILETTATA PORTA MOLLA (BRUNITO) |
| 0310874023E | RONDELLA SV 16X45X6 SERRAGGIO UTENSILE |
| 0310890302G | RONDELLA SV 16X54X8 PER MOTORE HP4,5 -BRUNITO |
| 0311014101A | RALLA INTERNA |
| 0311020904C | PROFILATO GUIDA SEGA |
| 0311110301B | SUPPORTO X RULLO MOTOR. |
| 0311110305A | SUPPORTO X RULLO MOTORIZZATO PIANO SCANALATO |
| 0311110307E | RULLO MOTORIZZATO SOTTO IL PIANO SCANALATO |
| 0311120116B | PIANA 253X25X435 STD TRA 1°OS E 2°OS |
| 0311120217F | PIANA 253X25X435 CROMATA |
| 0311120840G | PIANA REXILON L=240 |
| 0311130105A | SLITTA O.I. TOPSET-XL |
| 0311130200B | MADREVITE TPN 20X5 SX O.I. |
| 0311130614A | ASTA BLOCC.SPOST.VERT.V.DX |
| 0311130800E | CILINDRO TOUPIE L=318 X INGRAS. |
| 0311130801G | MADREVITE TPN 30X15 SX 2 PR. V. SX CON INGRAS. |
| 0311130810F | RIGA FISSAGGIO GOMMA SU CUFFIA V.DX. STD. |
| 0311130817B | ANGOLARE 140X30X6 (14437) |
| 0311131062L | CARTER ENCODER V.DX/SX |
| 0311131069E | DISTANZIALE X CHIOCCIOLA -BRUNITO- |
| 0311131117G | ASTA BLOCC.SLITTA GR.V.SX |
| 0311131124B | SLITTA INFER.V.SX |
| 0311131401L | SUPPORTO BANDELLA TTL -BRUNITO- |
| 0311131402B | STAFFA PORTA MICRO -ZINCATO- |
| 0311131404F | ATTACCO CILINDRO TTL -ZINCATO- |

| Codice/Code | Descrizione/Descr./Beschr./Denom. |
|---|---|
| 0311131405H | PERNO RUOTA TTL |
| 0311131406A | LAMIERA X BANDELLA MAGNETICA -ZINCATO- |
| 0311131407C | CARTER TASTATORE TTL (VERN. BIANCO RAL9002) |
| 0311131409G | DISTANZIALE DE=16 DI=7 L=40 -BRUNITO- |
| 0311131410H | PIASTRA DISTANZ. TTL PER MACCH. 260 -BRUNITO- |
| 0311131411A | CAMMA SCATTO RUOTA TTL -ZINCATO- |
| 0311132515C | ALBERO 18 120 D8.5N2 D13.5N2 |
| 0311132516E | VITE TR.30X15 2P SX L.TOT=170 |
| 0311132517G | ANGOLARE 175X48X2 L8X33N2 |
| 0311132712A | PERNO BLOCC.-BRUNITO- |
| 0311132716L | PERNO BLOCCAGGIO -BRUNITO- |
| 0311133220G | PIASTRA MOVIM.ORIZZ.-BRUNITO- |
| 0311133510C | MADREVITE TPN 20X5 SX (12884) |
| 0311133707B | PRESSATORE DX (14815) |
| 0311133708D | PRESSATORE SX (14815) |
| 0311136025G | ALBERO TOUPIE D=40 L=220 EXP MASTER |
| 0311136026L | ALBERO TOUPIE D=50 L=220 EXP MASTER |
| 0311136027B | ALBERO TOUPIE D=1" 13/16 L=220 EXP MASTER |
| 0311136419D | SCARPA PRES. USCITA TOPMASTER |
| 0311136426H | ANGOLARE 130X60X45 |
| 0311136427A | TARGHETTA X OLIO IMP.IDRAUL.C/SUPP. |
| 0311136434E | VITE S.FINE L=110 |
| 0311136703F | ASTA BLOCCAG. SLITTA |
| 0311136705A | VITE TPN 20X5 L=695 |
| 0311140041F | ALBERO RUOTE L=305 |
| 0311150209F | PIATTO 30X5X90 -BRUNITO- |
| 0311160301C | QUADRO 45 L=23 -BRUNITO- |
| 0311160925G | ANGOLARE GUIDA LISTELLI -BRUNITO- |
| 0311161518E | GUIDA DX USCITA ALL'UNIV. -CROMATA- |
| 0311175007G | TARGA 6000' DX |
| 0311175009B | TARGA 8300' DX |
| 0311190400L | CILINDRO TOUPIE UNIV. CON INGRAS. |
| 0311190402D | PIASTRA CIL.PNE. (4759) -BRUNITO- |
| 0311190403F | ANGOLARE -BRUNITO- |
| 0311190418H | FLANGIA ATTACCO E.M.-BRUNITO- |
| 0311190421D | SLITTA A CROCE |
| 0311190422F | SLITTA VERT. |
| 0311190423H | PIATTO -BRUNITO- |
| 0311190424A | PIATTO -BRUNITO- |
| 0311190425C | LARDONE X SLITTA |
| 0311190426E | LARDONE |

| Codice/Code | Descrizione/Descr./Beschr./Denom. |
|---|---|
| 0311190431E | SUPPORTO GUIDA USC.-BRUNITO- |
| 0311190432G | GUIDA DX |
| 0311190433L | PIANA USCITA |
| 0311190434B | PIANA USCITA |
| 0311190435D | PIANA CON INCAVO |
| 0311190436F | PIANA CON INCAVO |
| 0311190454D | PULEGGIA MOTRICE UNIV. RPM=4000 |
| 0311190458C | COLTELLO DIVISORE SP=2,15 |
| 0313122711A | VITE PER REGOLAZIONE PIEDI E BASAMENTO |
| 0316023501B | VITE DI BATTUTA SPOSTAM.PIANA E GUIDA |
| 0316023700D | PIASTRA BLOCCAGGIO (BRUNITO) |
| 0316023800F | POMELLO COMANDO (BRUNITO) |
| 0316030500H | BOCCOLA |
| 0316030800E | VITE SENZA FINE M=2,5 N.2 PRINC.CON CAVA DA 13 |
| 0316031000H | DISTANZIALE |
| 0316036400C | ANELLO CON DENTATURA ESTERNA D=40 |
| 0316081401A | CAMICIA PRESSATORI VERT. |
| 0316081500A | MOLLA EL.CIL COMPR 2,5=DF 17,7 =DE 110,0 =LL |
| 0316081600C | MANOPOLA REGISTRO |
| 0316085500E | PERNO PER PRESS.ORIZZ.A UNA RUOTA |
| 0316330019B | POMELLO GRADUATO PER VITI (5 MM AL GIRO) |
| 0316330020C | RONDELLA DE=35 SP=4 CON ASOLA=13 X REGGISPINTA |
| 0316332549H | DISTANZIALE PER MOTORE --( BRUNITO )-- |
| 0316332636C | PASTICCA PER GUIDA PARASCHEGGE |
| 0316333847B | CHIOCCIOLA TPN.20X5 FLANGIATA D=62 BRZ. |
| 0316341208F | TARGA PER BATTUTE SU REVOLVER 242X12 1 |
| 0316360045C | RONDELLA SV 6X30X4 PER INCISORE AUTOM. |
| 0316511003F | PERNO ECCENTRICO PER RUOTE E GUIDE |
| 0317510822E | GUIDA PORTACAMME "3" L=228 |
| 0317521504D | ANELLO PER REGGISPINTA |
| 0317542101D | MOLLA ELICOIDALE CILINDRICA A COMPRESSIONE |
| 0317542103H | MOLLA COMP.L=35 DE13 DF1,2 |
| 0317574624C | CHIOCCIOLA TPN.25X5 FLANGIATA D=62 BRZ. |
| 0319012100D | POMELLO M10X80 |
| 0319012600E | POMOLO M12 OT D=55 FEMM DESIGN 99 SPE |
| 0319012601G | POMOLO M10 OT D=55 30 SPE |
| 0319012710H | POMOLO M10 30 D=40 DESIGN 99 SPE |
| 0319013006F | POMOLO M12 H.IMP=30 SPE |
| 0319013512L | POMELLO M8 X 20 |
| 0319013515F | POMOLO 7X7 SPE |
| 0319014002H | POMELLO M10X30 |

| Codice/Code | Descrizione/Descr./Beschr./Denom. |
|---|---|
| 0319014013B | POMELLO M8X30 |
| 0319014027B | POMELLO M8X60 |
| 0319014036A | POMELLO M10X125 |
| 0319015001G | POMELLO M8X75 |
| 0319016123G | POMOLO M6 14 FISSAGGIO CAMMA P.F. SPE |
| 0319412312H | SCIVOLO IN USCITA P230 IN LINEA CON NASTRO |
| 0319412313A | PIATTO 50X20 L=200 X SCIV. USC. P230 -BRUNITO- |
| 0319412314C | SUPPORTO SCIVOLO SU NASTRO-BRUNITO- |
| 0319412315E | BOCCOLA 11 20 21 DC=40X10 (SUPP.SCIVOLO) |
| 0319412316G | GHIERA 8 40 10,5 D20 (SUPPORTO SCIVOLO SU NASTRO) |
| 0319412905G | PIASTRA PER FINECORSA |
| 0319430404F | DISTANZIALE |
| 0319430407C | CORONA DENTATA |
| 0319430409G | PERNO |
| 0319430901A | SCATOLA DI RINVIO |
| 0319430902C | VITE TPN.2 PR.30X15 LTOT=188 |
| 0319430904G | CORONA DENTATA |
| 0319430912D | BOCCOLA (DM.30-DM18-SP15) |
| 0319431135F | RONDELLA SV 12X50X6 PER MOTORI HP 10-15 BRUNITO |
| 0319431141H | PULEGGIA CONDOTTA |
| 0319431142A | RONDELLA CNTR 40 12X48X10 PULEGGIA ALBERO TOUPIE |
| 0319431151L | BOCCOLA 40 95 11 CON LABIRINTO PER MANDRINO |
| 0319431161A | PULEGGIA MOTRICE 5000G 50HZ E 6000G 60HZ 4-5,5KW |
| 0319431162C | PULEGGIA MOTRICE 6000G 50HZ 4-5,5KW |
| 0319431163E | PULEGGIA MOTRICE 8300G 60HZ 4-5,5KW |
| 0319431164G | PULEGGIA MOTRICE 8300G 50HZ 4-5,5KW |
| 0319431166B | PULEGGIA MOTRICE 5000G 50HZ E 6000G 60HZ 7,5-11KW |
| 0319431167D | PULEGGIA MOTRICE 6000G 50HZ 7,5-11KW |
| 0319431168F | PULEGGIA MOTRICE 8300G 60HZ 7,5-11KW |
| 0319431169H | PULEGGIA MOTRICE 8300G 50HZ 7,5-11KW |
| 0319431222A | BARRA FILETTATA M12X140 C.7378 |
| 0319432022G | GUIDA PORTACAMME "3" L=248 |
| 0319432501D | ANELLO DISTANZIALE D=40 H=9,75 BRUNITO |
| 0319432704E | GUIDA PORTACAMME "3" L=100 |
| 0319432839B | REVOLVER -- BRUNITO -- |
| 0319432840C | PERNO PER REVOLVER |
| 0319432915C | CHIOCCIOLA TPN.20X5 FLANGIATA D=62 |
| 0319433001D | ANELLO DISTANZIALE D=1 13/16" H=3 BRUNITO |
| 0319433002F | ANELLO DISTANZIALE D=1 13/16" H=5 -BRUNITO- |
| 0319433003H | ANELLO DISTANZIALE D=1 13/16" H=7 BRUNITO |
| 0319433004A | ANELLO DISTANZIALE D=1 13/16" H=15 (BRUNITO) |
| 0319433005C | ANELLO DISTANZIALE D=1 13/16" H=20 (BRUNITO) |
| 0319433006E | ANELLO DISTANZIALE D=1 13/16" H=25 BRUNITO |
| 0319433111G | GUIDA PORTACAMME "3" L=170 |
| 0319433348A | ANELLO ANTERIORE PER MANDRINO |
| 0319433349C | GHIERA M55X1,5 DE=98 ANT. PER MANDRINO D=50 |
| 0319433350D | GHIERA M55X1,5 DE=98 ANT. PER MANDRINO D=40 |
| 0319433356G | ANELLO ANTERIORE X MANDRINO CON INGRASSATORE |
| 0319433371H | CILINDRO TOUPIE |
| 0319433373C | CILINDRO TOUPIE CON INGRASSATORI |
| 0319433375G | CILINDRO TOUPIE CORTO AD ASSE INCLINATO |
| 0319433501E | REVOLVER --( BRUNITO )-- |
| 0319433502G | PERNO --( BRUNITO )-- |
| 0319433800L | SLITTA PER ORIZZ.INFERIORE P170 |
| 0319433851G | VITE BLOCCAGGIO (BRUNITO) |
| 0319434106H | VITE TPN.20X5 LTOT=272 CON QUADRO |
| 0319434140L | FLANGIA RITEGNO VITE |
| 0319434402F | CARTER |
| 0319434728H | SUPPORTO -BRUNITO- |
| 0319434729A | COLTELLO DIVISORE DX S=3 H=4 |
| 0319434730B | MOLLA PRESSIONE SUPERIORE |
| 0319434731D | MOLLA LATERALE DX |
| 0319434732F | MOLLA A BALESTRA 0,5X30 LATERALE SX |
| 0319434733H | COLTELLO DIVISORE SX S=3 H=4 |
| 0319434791A | SUPPORTO PER RUOTA PRESSATRICE |
| 0319435570C | DISTANZIALE |
| 0319435704H | ALBERO TOUPIE D=40 L=250 CORTO |
| 0319435710A | ALBERO TOUPIE D=50 L=250 CORTO |
| 0319435713G | ALBERO TOUPIE D=1"13/16 L=250 CORTO |
| 0319435714L | ALBERO TOUPIE D=40 L=260 CORTO |
| 0319435715B | ALBERO TOUPIE D=50 L=260 CORTO |
| 0319435716D | ALBERO TOUPIE D=1"13/16 L=260 CORTO |
| 0319435763C | ALBERO TOUPIE D=35 L=240 LUNGO |
| 0319435767B | ALBERO TOUPIE D=40 L=240 LUNGO |
| 0319435775H | ALBERO TOUPIE D=50 L=240 LUNGO |
| 0319435779G | ALBERO TOUPIE D=1"13/16 L=240 LUNGO |
| 0319435782C | ALBERO TOUPIE D=1"1/2 L=260 |
| 0319441002F | CHIOCCIOLA TP 30X15 2 PR. FLANGIATA BRZ. |
| 0319441202A | RULLO TRASCINATORE FLANGIATO H=20 |
| 0319441203C | DISTANZIALE PER RUOTE H=40 (BRUNITO) |
| 0319441207B | RULLO TRASCINATORE FLANGIATO H=10 (BRUNITO) |
| 0319441226B | RULLO TRASCINATORE FLANG. H=7,5 (SPECIALE) |

| Codice/Code | Descrizione/Descr./Beschr./Denom. |
|---|---|
| 0319441227D | RULLO TRAINO FLANGIATO H=8 |
| 0319442923B | DISTANZIALE PER RUOTE H=10 --( BRUNITO )-- |
| 0319443106L | ALBERO CONDOTTO |
| 0319450147E | CHIAVETTA |
| 0319450149L | BUSSOLA D'ALLINEAMENTO (BRUNITO) |
| 0319450175D | MOLLA COMP.L=45 DE17,5 DF2,5 |
| 0319460237H | CHIAVETTA DI GUIDA |
| 0319460256H | PIASTRA DI SCORRIMENTO |
| 0319460262A | PIASTRA PER VITE |
| 0319460271L | SUPPORTO PRESSATORE IN USCITA |
| 0319460711D | DISTANZIALE --( BRUNITO )-- |
| 0319460722G | COLTELLO DIVISORE STAND.R=127 S=3,4 |
| 0319460723L | COLTELLO DIVISORE STAND.R=127 S=2,6 |
| 0319461001H | SOSTEGNO |
| 0319461185H | DISTANZIALE DE=30 X DI=13 X L=22 BRUNITO |
| 0319461225D | PERNO --( BRUNITO )-- |
| 0319461226F | BIELLETTA |
| 0319461227H | BRONZINA |
| 0319461228A | RUOTA |
| 0319461229C | PERNO CUSCINETTO --( BRUNITO )-- |
| 0319461230D | MOLLA EL.CIL TRAZ 3,5=DF 20,0 =DE 81,5 =LL |
| 0319461231F | REGISTRO MOLLA |
| 0319461703H | PORTACOLTELLO |
| 0319461706E | STAFFA PER COLTELLI DIVISORI |
| 0319461804C | TASSELLO |
| 0319470606D | SUPPORTO SQUADRO |
| 0319480105C | BARRA ESAGONALE (BRUNITO) |
| 0319480106E | SUPPORTO PRESSATORE |
| 0319480113L | DISTANZIALE PER RUOTA PRESSATRICE -BRUNITO- |
| 0319480201F | BARRA PER PRESSATORI TONDA L=250 |
| 0319480205E | PATTINO PRESSATORE |
| 0321042000B | TESTATA CILINDRO |
| 0321370601E | GUIDA DA PIALLA INF.CON RASANTE A V.D. -(BRUNITO)- |
| 0321420413F | INSERTO IN REXILON |
| 0321420522G | INSERTO IN REXILON |
| 0321420843H | BARRETTA 10X10X150 DA RISCONTRO PER SSET PIANO SCA |
| 0321910785H | TARGA PER SOLLEVAM. CON MONTACARICHI 75,0 0,1 |
| 0321910788E | TARGA CON VAL. D MIN-MAX E N¢GIRI X ALB. UNIV 85X5 |
| 0321910790H | TARGA CON INDICAZIONE PER MANDRINO D MIN-MAX N 85X |
| 0321910791A | TARGA CON INDICAZIONE PER MANDRINO D MIN-MAX N 85X |
| 0321910792C | TARGA CON IND. PER MANDR. D MIN-MAX N/G 8300 D 85X |
| 0321910793E | TARGA CON IND. PER MANDR. D MIN-MAX N/G 8300 S 85X |
| 0321910794G | TARGA CON VALORI DI D MIN MAX UT. N/G UNIV CON 85X |
| 0321910795L | TARGA C/INDICAZIONE DI CONSULTARE IL MANUALE 50,0 |
| 0321910796B | TARGA C/INDICAZIONE X MAND DRINO DMIN-DMAX N¢/G 85 |
| 0321910797D | TARGA C/IND. MANDR. X DMIN - N¢ GIRI 8300 DX 85X50 |
| 0321910801C | TARGA SCORRILEGNO WURTH I-GB-F-D-E-RUS 100X50 0,1 |
| 0321910802E | TARGA SCORRILEGNO WURTH I- GB-NL-P-GR 100X50 0,1 |
| 0321910803G | TARGA SCORRILEGNO WURTH I- GB-S-N-SF-ISL-DK 100X50 |
| 0321910818L | TARGA CON INDIC. X MANDRINO D.MIN/MAX N/7000 SX |
| 0321910819B | TARGA CON INDIC. X MANDRINO D.MIN/MAX N/G7000 DX |
| 0321920508D | BARRA DI RISCONTRO 10X10X160 PIANO SCA.CROMATO |
| 0321930014G | VITE BLOCCAGGIO M12X50 L.TOT=435 MM O.S. (BRUNITO) |
| 0321930016B | SUPP. VITE POSIZIONAMENTO CON BLOCCAGGIO |
| 0321930017D | ANELLO PER BLOCCAGGIO |
| 0321930112E | SUPPORTO A MOLLA PER ENCODER |
| 0321930118H | GUIDA PORTACAMME "3" L=060 |
| 0321930124A | DIST. FILETTATO PER CARTER PROT.ENCODER |
| 0321930129B | FLANGIA DI ATTACCO MOTORIDUTTORE |
| 0321930303A | PERNO BANDIERA MOTORE |
| 0321930305E | BANDIERA MOTORE C132 SUPERSET 2S |
| 0321930306G | BANDIERA MOTORE C100/112 SUPERSET 2S |
| 0321930406L | VOLANTINO TTL |
| 0321930408D | PULEGGIA CONDOTTA PER TTL |
| 0321930409F | PULEGGIA MOTRICE TTL |
| 0321930412B | PERNO PER LEVE TTL |
| 0321930418E | PULEGGIA MOTRICE TTL Z=28 |
| 0321930419G | CAMMA PER ESCLUSIONE TTL |
| 0321930421A | TARGHETTA GRADUATA |
| 0321930439L | PRESSATORE IN USC.VERT.SX TTL BRUNITO |
| 0321930441C | SUPPORTO PRESSATORE X TTL BRUNITO |
| 0321930442E | PERNO CALIBRATO 10X80 |
| 0321930443G | MOLLA EL.CIL TORS 5,5=DF 57,5 =DE |
| 0321930444L | PERNO X LEVA DI GUIDA TTL |
| 0321930448H | LEVA DI GUIDA TTL (REXILON) |
| 0321930454A | LASTRA IN POLICARBONATO X BANDELLA |
| 0321930456E | ANELLO PORTA CUSCINETTI |
| 0321930708A | PULEGGIA CONDOTTA DENTATA 22H |
| 0321930803B | PULEGGIA CONDOTTA 142 80 D40 PER INGR. |
| 0321940060F | RULLO DI TRAINO SUL PIANO ZIGRINATO |
| 0321940110C | POMELLO M10 FEM.X SOLL. TRAINO DOPO O.S. |
| 0321940111E | BLOCCHETTO X SOLL.TRAINO DOPO ORIZZ.SUP.(BRUNITO) |

| Codice/Code | Descrizione/Descr./Beschr./Denom. |
|---|---|
| 0321940125E | BARRA FILETTATA M10 380-MM FE37 A UNI 7070-72 |
| 0321940224E | DISTANZIALE X CUSC. SU FLANGIA SOLL.TRAV.E OR.SUP. |
| 0321940227B | CHIOCCIOLA TPN.30X6 FLANGIATA BRZ. |
| 0321940235H | FLANGIA X CUSCINETTO SOLL.TRAV.E O.S. BRUNITO |
| 0321940425B | ASTUCCIO PORTAPIGNA |
| 0321940456G | DISTANZIALE DE=13 DI=9 L=13,5 CAPOTE SSET BRUNITO |
| 0321940493E | DISCO DI COMANDO PER SBLOCCO MANUALE |
| 0321940538B | DISTANZIALE PER RULLO DENTATO STD |
| 0321940618B | ALBERO ECCENTR.X RULLO MOTORIZZATO SU SUPERSET-2SU |
| 0321940621G | PIASTRA X BLOCCAGGIO ALB.ECC.RULLO MOT.SUPERSET-2S |
| 0321940622L | RULLO MOTORIZZATO X SUPERSET 2S-2SU |
| 0321940624D | LAMIERINO RASCHIA RULLO MOTORIZZATO SUPERSET 2-S |
| 0321940801L | TESTATA DI ANCORAGGIO PER PIST. PNEUM. |
| 0321940802B | BIELLA PER ESCLUSIONE TANDEM |
| 0321940803D | PERNO DI REGISTRAZIONE TANDEM |
| 0321940804F | ROSETTA SVASATA |
| 0321940805H | PERNO DI TRASLAZIONE TANDEM |
| 0321940806A | PERNO DI FULCRO PER TANDEM |
| 0321940807C | PERNO DI FULCRO PER CILINDRO PNEUM. |
| 0321940810H | SEMISCATOLA DX. PER TANDEM |
| 0321940811A | SEMISCATOLA SX. PER TANDEM |
| 0321940812C | INGRANAGGIO OZIOSO Z = 35 PER TANDEM |
| 0321940813E | MOZZO DENTATO PER TANDEM |
| 0321940814G | LINGUETTA CON ESTREMITA FRESATE |
| 0321940815L | ANELLO DI BLOCCAGGIO |
| 0321940816B | ANELLO ELASTICO D'ARRESTO |
| 0321940818F | PERNO INTERMEDIO PER SCATOLA TANDEM |
| 0321941006D | BOCCOLA 40 50 24 DC=60X6 |
| 0321941007F | BOCCOLA 40 1''13/16 24 DC=60X6 |
| 0321950122A | MOLLA TRAZIONE L=166 DE30 DF4 X PIANA D'ENTRATA |
| 0321950218E | PERNO LEVA COM.GUIDA X PIANA ENT.SUPERSET(BRUNITO) |
| 0321960129H | BIELLA X ESLUSIONE BRUNITO |
| 0321960131B | SEMIFORCELLA PER CILINDRO PNE.M8 BRUNITO |
| 0321960311D | PIASTRA PER GUIDA SX DOPO V.S. |
| 0321960313H | BLOCCHETTO SOST.GUIDA IN USCITA AL V.SX |
| 0321960314A | LARDONE POSIZ. ORIZZ. GUIDA IN USCITA AL V.SX |
| 0321960329C | PERNO DI SOLLEVAMENTO GUIDA UNIVERSALE SX |
| 0321960373E | PERNO 12 18 D10 E1 |
| 0321960416G | MOLLA COMP.L=55,3 DE22 DF3,2 |
| 0321960417L | BARRA FILETT. M12X175 X FINE CORSA ORIZZ.SUPERIOR |
| 0321960608E | COLTELLO DIVISORE DX SU O.S. |

| Codice/Code | Descrizione/Descr./Beschr./Denom. |
|---|---|
| 0321960609G | SUPPORTO GUIDA PER COLTELLO DIVISORE |
| 0321960610H | SUPPORTO PER MOLLA E MARTELLETTO |
| 0321960611A | MORSETTO PER SUPPORTO MOLLA E MARTELLETTO |
| 0321960612C | COLTELLO DIVISORE DOPO ULTIMO O.S. SP.=2,5 L.170 |
| 0321960613E | COLTELLO DIVISORE DOPO ULTIMO O.S. SP.=2,5 L.220 |
| 0321960703F | LARDONE |
| 0321960706C | PRESSATORE DESTRO |
| 0321960707E | PRESSATORE SINISTRO |
| 0321960708G | PERNO DI BLOCCAGGIO |
| 0321970121C | GUIDA DX IN ENTRATA UNIVERSALE |
| 0321970220C | RIGA PER GUIDA SEP.LIST. |
| 0321970509G | GUIDA DX IN ENTRATA UNIVERSALE CROMATA |
| 0321990020C | CONTROFLANGIA X GRUPPO UNIVERSALE SUPERSET-2SU |
| 0321990021E | DISCO DI PRECARICO MOLLA X UNIVERSALE SUPERSET 2SU |
| 0321990026F | PULEGGIA CONDOTTA X UNIVERSALE SU SUPERSET 2SU |
| 0321990027H | PULEGGIA MOTRICE 50HZ C132 X UNIVERSALE SSET-2SU |
| 0321990028A | PULEGGIA MOTRICE 50HZ C110/112 X UNIVERSALE SSET-2 |
| 0321990029C | PULEGGIA MOTRICE 60HZ C132 X UNIVERSALE SSET-2SU |
| 0321990030D | PULEGGIA MOTRICE 60HZ C110/112 X UNIVERSALE SSET-2 |
| 0321990046H | PIASTRA C/SMUSSO X FISS. PIANE SU UNIV. (BRUNITO) |
| 0321990049E | VITE M10X40 |
| 0321990051H | LAMIERA DI CHIUSURA PER CUFFIA UNIVERSALE |
| 0321990056L | LAMIERA DI PROTEZ.X CUFFIA LAME SU UNIVERSALE 2SU |
| 0321990057B | SCHERMO PARATRUCIOLI X CUFFIA LAME SU UNIVERSALE |
| 0321990058D | PRESSATORE ANT.X CUFFIA LAME SU UNIVERSALE BRUNITO |
| 0321990059F | GUIDA X POSIZ.COLT.DIVISORE CUFFIA LAMEUN.BRUNITO |
| 0321990060G | SUPP.X COLTELLO DIVISORE SU CUFFIA X LAME BRUNITO |
| 0321990063D | BOCCOLA ECCENTRICA (SPECIALE) |
| 0321990064F | PERNO DI BLOCCAGGIO |
| 0321990065H | BULLONE M24X1,5 CON ES.30 (SPECIALE) |
| 0321990066A | DISCO D=35 CON FORO M8 |
| 0321990068E | VITE M10 X 10 |
| 0321990086C | PULEGGIA CONDOTTA PER UNIVERS. A 8300 G/MIN |
| 0321990087E | PULEGGIA MOTRICE PER UNIVERS. A 8300 G/MIN |
| 0321990102G | PIASTRA PORTA COLTELLO DIVISORE (S.L.T.) |
| 0321990105D | MARTELLETTO ANTIRIT. PER LISTELLO DX (S.L.T.) |
| 0321990106F | PERNO FULCRO MARTELL. ANTIRIT. PER LIST. (S.L.T.) |
| 0321990107H | MARTELLETTO ANTIRITORNO |
| 0321990203B | FLANGIA DA D=85 PER LAME DA D=300-BRUNITO- |
| 0321990209E | VITE DI SOLLEVAMENTO TOUPIE A SX. |
| 0321990235L | PIATTO REGGICOLTELLO DX (SPEC.) |

| Codice/Code | Descrizione/Descr./Beschr./Denom. |
|---|---|
| 0321990236B | PIATTO REGGICOLTELLO SX (SPEC.) |
| 0321990237D | COLTELLO DIVISORE SP.2,2 (SPEC.) |
| 0321990238F | SUPPORTO PER COLTELLO DIVISORE DX (SPEC.) |
| 0321990239H | PIATTO 30X6 L=110 M6N2 D7N2-BRUNITO- |
| 0321990240L | PIATTO 30X6 L=100 M6N4 D7N2-BRUNITO- |
| 0321990241B | SUPPORTO DI GUIDA (SPEC.)-BRUNITO- |
| 0321990243F | SUPPORTO PER COLTELLO DIVISORE SX (SPEC.) |
| 0321990244H | PRESSATORE ANT.X CUFFIA C/LAME-BRUNITO- |
| 0321990245A | SCHERMO PARATRUCCIOLI |
| 0321990251C | QUADRO 10 L=95 D5.5 N2 |
| 0321990252E | SCHERMO PARATRUCCIOLI |
| 0322371108C | SOFFIATORE PER CAMME |
| 0322371496E | MOLLA TRAZIONE L=98,8 DE17 DF2 |
| 0322710100E | LARDONE POSTERIORE |
| 0322710104D | COPERCHIO DI CHIUSURA |
| 0322710106H | COPERCHIO UTENSILE O.I. |
| 0322710107A | COPERCHIO UTENSILE PIALLA |
| 0322710109E | STAFFA PORTA MICRO O.S. |
| 0322710110F | STAFFA X MICRO O.S. |
| 0322710113C | SPESSORE PIANA DOPO O.I. SP=0,5 |
| 0322710114E | GUIDA PER LAMIERA DI CHIUSURAV.SX |
| 0322710115G | LAMIERA DI CHIUSURA V.SX. |
| 0322710116L | SPESSORE PIANA DOPO O.I. CON UNIVERSALE SP=0,5 |
| 0322710117B | SPESSORE PIANA DOPO UNIVERSALE SP=0,5 |
| 0322710118D | COPERCHIO UT.O.I. L=260 |
| 0322710119F | COPERCHIO UT.PIALLA L=260 |
| 0322710120G | STAFFA PER MICRO SU MOV. VERT. O.S. H=180 |
| 0322710122B | STAFFA PORTAMICRO PER MOV.VERT. O.I. AD A.C. |
| 0322710123D | SPESSORE PIANA DOPO O.I. COMP.31 |
| 0322710271G | SUPPORTO AD 'L' PORTA CAMME |
| 0322711000D | CILINDRO TOUPIE CORTO AD ASSE INCLINATO |
| 0322711001F | CILINDRO TOUPIE L=318 X=214 |
| 0322711002H | CILINDRO TOUPIE L=268 X=164 |
| 0322712000E | ALBERO TOUPIE D=40 L.U=260 C/SEDE X 2COPP.DI CUSC |
| 0322712001G | ALBERO TOUPIE D=50 L.U=260 C/SEDE X 2COPP.DI CUSC |
| 0322712002L | ALB.TOUPIE D=1"13/16 LU=260 C/SEDE X2 COPP.DI CUS |
| 0322712003B | ALBERO TOUPIE D=40 L.U=140 C/SEDE X 2COPP.DI CUSC |
| 0322712004D | ALBERO TOUPIE D=40 L.U=180 C/SEDE X 2COPP.DI CUSC |
| 0322712005F | ALBERO TOUPIE D=50 L.U=140 C/SEDE X 2COPP.DI CUSC |
| 0322712006H | ALBERO TOUPIE D=50 L.U=180 C/SEDE X 2COPP.DI CUSC |
| 0322712007A | ALB.TOUPIE D=1"13/16 LU=140 C/SEDE X2 COPP.DI CUS |
| 0322712008C | ALB.TOUPIE D=1"13/16 LU=180 C/SEDE X2 COPP.DI CUS |
| 0322720101L | PIANA A PETTINE DOPO PIALLA |
| 0322720111A | PIANA 248X25 L=330 |
| 0322720112C | PIANA 248X25 L=273,5 |
| 0322720113E | PIANA 248X25 L=700 CON RULLO SENZA O.I. |
| 0322720118F | PIANA IN USCITA O.I. COMP.31 |
| 0322720122D | PIANA LARDONE TRA 1'V.DX E 1'V.SX |
| 0322720125A | PIANA LARDONE DOPO 1' V.SX |
| 0322720126C | PIANA PER RULLO MOTORIZZATO S.SET XL COMP.31 |
| 0322720140B | PIANA 248X25 L=242 |
| 0322720141D | PIANA 253X25 L=495 IN USCITA UNIV. S.SETXL |
| 0322720142F | PIANA IN REXILON |
| 0322720143H | PIANA CON INCAVO PER UNIV. S.SETXL |
| 0322720144A | PIANA 253X25X298 IN USCITA UNIV. S.SETXL |
| 0322720145C | PIANA 253X25X82 IN ENTRATA UNIV. S.SETXL |
| 0322720146E | PIATTO BLOCCAGGIO PIANE UNIV. S.SETXL -BRUNITO- |
| 0322720181H | PIANO PER UNIVERSALE PER ELETTROMANDRINO COLOMBO |
| 0322720182A | DEFLETTORE TRUCIOLI |
| 0322720183C | DEFLETTORE SAGOMATO IN USCITA PEZZO |
| 0322720184E | SEPARATORE ASPIRAZIONE |
| 0322720192B | PIANA 253 X 25 L=275 IN REXILON |
| 0322720201B | PIANA 253X25 L=284 PER INSERTO IN REXILON |
| 0322720202D | PIANA 253X25 L=203 PER INSERTO IN REXILON E RULLO |
| 0322720203F | PIANA 253X25 L=203 PER INS. IN REX E DOPPIO RULLO |
| 0322720401F | PIANA A PETTINE DOPO PIALLA CROMATA |
| 0322720402H | PIANA 253X25X284 PER INS.REX CROMATA |
| 0322720403A | PIANA 253X25X203 X INSERTO REX C./RULLO CROMATA |
| 0322720404C | PIANA 253 X 25 L=274 CROMATA |
| 0322720405E | PIANA 254 X 25 L=345 CROMATA |
| 0322720406G | PIANA 253X25 L=203 CROMATA X INS.IN REX E DOPP.RU |
| 0322720411G | PIANA 248X25 L=330 CROMATA |
| 0322720412L | PIANA 248X25 L=273,5 CON RULLO CROMATA |
| 0322720413B | PIANA 248X25 L=700 CON RULLO SENZA O.I. CROMATA |
| 0322720422A | PIANA LARDONE TRA 1V. DX E 1V. SX CROMATA |
| 0322720423C | PIANO IN USCITA O.I. CLASS (CROMATA) |
| 0322720424E | PIANO X RULLO MOT. CLASS (CROMATA) |
| 0322720425G | PIANA LARDONE DOPO 1 V.SX S.SETXL CROMATA |
| 0322720440H | PIANA 248X25 L=242 IN ENTRATA UNIV. CROMATA |
| 0322720441A | PIANA 253X25 L=495 IN USCITA UNIV.S.SET.XL CROMATA |
| 0322720442C | PIANA IN REXILON SU UNIV. PER PIANO CROMATO |
| 0322720443E | PIANA CON INCAVO X UNIVERSALE S.SETXL CROMATA |

| Codice/Code | Descrizione/Descr./Beschr./Denom. |
|---|---|
| 0322720444G | PIANA 253X25 L=298 IN USCITA UNIV. S.SETXL CROMATA |
| 0322720445L | PIANA 253X25X82 IN ENTRATA UNIV. S.SETXL CROMATA |
| 0322720601A | PIANA SCANALATA DAVANTI AL VERTICALE DX. |
| 0322720602C | LUNETTA PER PIANI SCANALATI DAVANTI AL V.DX. |
| 0322720603E | PIANO SCAN.VERSIONE A LISTELLO DAVANTI AL VERT.SX. |
| 0322720604G | PIANO SCANALATO DAVANTI AL VERT.SX. |
| 0322720605L | PIANA SCANALATA DAVANTI AL VERTICALE SX. |
| 0322720606B | TERZO SETTORE X PIANI SCANALATI DAVANTI AL V.SX. |
| 0322720607D | SECONDO SETTORE X PIANI SCANALATI DAVANTI AL V.SX. |
| 0322720608F | PIANO SCANALATO PRIMA O.I. |
| 0322720609H | PIANA SCAN. 253X48 L=275 CON RULLO |
| 0322720610L | PIANA 253X25X263 PER ATTACCO PIANI SCANALATI |
| 0322720612D | PIANA 253X48 L=495 IN USC. UNIV. X PIANI SCAN. |
| 0322720613F | PIANA 253X48 L=242 IN ENTRATA UNIV. X PIANI SCAN. |
| 0322720614H | PIANA SCAN. 253X48 L=82 IN ENTR.UNIV. X PIANI SCAN |
| 0322720615A | PIANA SCAN. 253X48 L=298 IN USCITA PER PIANI SCAN. |
| 0322720616C | PRIMO SETTORE X PIANI SCANALATI DAVANTI AL V.SX. |
| 0322720617E | PIANA DOPO PIALLA PER PIANI SCANALATI |
| 0322720618G | PIANO SCANALATO PRIMA O.I. CON LUBRIF. |
| 0322720622E | PIANA LARDONE TRA 1¢V.DX. E 1¢V.SX. PER PIANI SCAN |
| 0322720624L | PIANA 253 X 48 L=298 USCITA DOPPIO UNIV.PIA.SCA. |
| 0322720625B | PIANA LARDONE DOPO 1¢V.SX. PER PIANI SCANALATI |
| 0322720626D | PIANA 254 X 38 L=298 IN USC.DOPPIO UNIV.PIA.SCA |
| 0322720701C | PIANA DOPO PIALLA C/ARIA |
| 0322720702E | PIANA TRA V.DX E V.SX C/ARIA |
| 0322720703G | PIANA LARDONE DOPO V.SX C/ARIA |
| 0322720711D | PIANA A PETTINE DOPO PIALLA CROMATA CON ARIA |
| 0322720712F | PIANA LARDONE TRA 1V. DX E 1V. SX CROMATA CON ARIA |
| 0322720713H | PIANA LARDONE DOPO 1 V.SX S.SETXL CROMATA CON ARIA |
| 0322730021B | ALBERO TOUPYE D=50 L.U.=140 |
| 0322730022D | ALBERO TOUPYE D=50 L.U.=180 |
| 0322730023F | ALBERO TOUPYE D=1" 13/16 L.U.=140 |
| 0322730024H | ALBERO TOUPYE D=1" 13/16 L.U.=180 |
| 0322730025A | ALBERO TOUPIE D=35 L.U.=140 |
| 0322730026C | ALBERO TOUPIE D=35 L=250 CORTO |
| 0322730027E | ALBERO TOUPIE D 1" 1/2 LUNGHEZZA 140 |
| 0322730101B | SLITTA SUPERIORE V.SX |
| 0322730103F | SLITTA INFERIORE V.SX |
| 0322730105A | LUNETTA DI RIDUZIONE |
| 0322730106C | LUNETTA DI RIDUZIONE CROMATA |
| 0322730107E | SLITTA SUPERIORE V.SX CROMATA |

| Codice/Code | Descrizione/Descr./Beschr./Denom. |
|---|---|
| 0322730111C | LARDONE L=260 |
| 0322730112E | SLITTA SUP. V.SX. AD A.C. |
| 0322730115B | ASTA BLOCC.SLITTA V.SX |
| 0322730119A | LAMIERA CHIUSURA GUIDA SX |
| 0322730121D | GUIDA SX INGRESSO |
| 0322730123H | SUPPORTO SCARPA PRESSATRICE |
| 0322730125C | PIATTO 100X0,5 L=130 |
| 0322730127G | VITE M20X2,5X77 COMANDO PRESET DIAM.V.SX |
| 0322730129B | PERNO D20 L46 M10 |
| 0322730133L | PROLUNGA GUIDA SX RUOTA PRESS. |
| 0322730135D | ASTA BLOCC.PRESET DIAM.V.SX |
| 0322730138A | TUBO 20 11 280 -BRUNITO- |
| 0322730139C | PRIGIONIERO FILETTO DX-SX M10 |
| 0322730141F | VITE TPN 30X15 2P SX L=220 |
| 0322730142H | GUIDA DI SX IN INGRESSO PER TTL |
| 0322730145E | STAFFA SUPP.CHIOCC.X V.SX |
| 0322730147L | VITE TPN 20X5 L=330 L.TOT=622 V.SX |
| 0322730158C | GUIDA SX DOPO V.S. PER GRUPPI ASSE CONTINUO |
| 0322730160F | CILINDRO TOUPYE L=318 |
| 0322730161H | PULEGGIA CONDOTTA |
| 0322730162A | MADREVITE TPN 30X15 SX 2 PR. V.SX |
| 0322730163C | PERNO REGOLAZIONE MOLLA -BRUNITO- |
| 0322730164E | POMELLO FEMM.IMPERD.-BRUNITO- |
| 0322730165G | GUIDA SX DOPO V.SX -BRUNITO- |
| 0322730166L | GUIDA SX SP.4 |
| 0322730167B | QUADRO 50 X V.SX -BRUNITO- |
| 0322730168D | LAMIERA CHIUSURA BANDELLA |
| 0322730169F | VITE DI REGISTRO |
| 0322730171L | BOCCOLA GUIDA VITI D=29 L=19 |
| 0322730172B | PULEGGIA 70 135 D28 |
| 0322730173D | PULEGGIA 70 162 D28 |
| 0322730174F | PULEGGIA 70 187 D28 |
| 0322730175H | PULEGGIA 70 220 D28 |
| 0322730176A | PULEGGIA 70 135 D38 |
| 0322730177C | PULEGGIA 70 162 D38 |
| 0322730178E | PULEGGIA 70 187 D38 |
| 0322730179G | PULEGGIA 70 220 D38 |
| 0322730180H | ALBERO TOUPYE D=40 L.U.=140 |
| 0322730181A | LAMIERA CHIUSURA BANDELLA |
| 0322730183E | ALBERO TOUPYE D=40 L.U.=180 |
| 0322730185L | PROTEZIONE V.SX |

| Codice/Code | Descrizione/Descr./Beschr./Denom. |
|---|---|
| 0322730186B | PERNO BLOCCAGGIO ASTA SU V.SX |
| 0322730187D | SUPPORTO ASTA DI BLOCCAGGIO |
| 0322730188F | ASTA BLOCCAGGIO MOV.ORIZ.V.SX |
| 0322730190L | ECCENTRICO REGOLAZIONE RUOTE PRESS. SU V. SX |
| 0322730192D | CONVOGLIATORE MOBILE CUFFIA V.SX -ZINCATO- |
| 0322730194H | PIASTRA DIST.CUFFIA V.SX X PIANI SCAN.-BRUNITO- |
| 0322730195A | PIATTO 100X0,5 L=130 D7 N2 |
| 0322730196C | BARRA PER BLOCCAGGIO SPOST. V.SX |
| 0322730197E | BARRA BLOCC.SPOST.L=260 |
| 0322730198G | SUPPORTO SCARPETTA PRESSATRICE SU O.S. |
| 0322730199L | SUPPORTO SCARPETTA PRESSATRICE SU O.S. |
| 0322730302H | MADREVITE TPN 20X5 SX O.I. |
| 0322730305E | VITE DI MANOVRA TRASL.PIALLA TPN 20X5 SX L=615 |
| 0322730306G | VITE DI MANOVRA O.I. TPN 20X5 L=269 |
| 0322730307L | FLANGIA 230,5 300 5 D14N4 |
| 0322730310E | ANELLO BLOCC.UT.PIALLA L=260-BRUNITO- |
| 0322730311G | ANELLO BLOCC.UT.PIALLA L=260-BRUNITO- |
| 0322730312L | SUPPORTO GUIDA PORTA CAMME |
| 0322730313B | PIASTRA PORTA MICRO |
| 0322730314D | SLITTA O.I. AD A.C. (SPECIALE) |
| 0322730315F | PIATTO 80X3 L=140 |
| 0322730316H | ANELLO DI BLOCCAGGIO UT. PER MACCH. L=260 |
| 0322730318C | SUPPORTO MOTORI O.I. A.C. VERT.ORIZZ. |
| 0322730319E | VITE TPN 25X5 SX L294 TRASL. MANDR. O.I. HSK |
| 0322730508F | MOLLA EL.CIL COMPR 3,60 =DF 22,5 =DE 56,0 =LL |
| 0322730511B | BARRA ESAGONALE CON ESTREMITA FILETTATA |
| 0322730512D | BUSSOLA ESAGONALE |
| 0322730589G | ALBERO 18 94 D8,5 N2 D13,5 N2 |
| 0322730600A | COPERCHIO O.S. |
| 0322730602E | SUPPORTO PRESSATORE USCITA O.S. |
| 0322730603G | PRESSATORE USCITA O.S. |
| 0322730604L | PIASTRA X VITE -BRUNITO- |
| 0322730605B | DOPPIO LARDONE X PRESS.USCITA |
| 0322730607F | SCARPA PRESS.USCITA |
| 0322730608H | BARRA FILETTATA 12 230 |
| 0322730610B | SCARPA PRESSATRICE |
| 0322730612F | PIATTO 120X0,5 L=140 D7N2 |
| 0322730613H | PERNO 15 120 |
| 0322730615C | VITE TR.30X15 2PR.SX L.TOT=200 |
| 0322730616E | SLITTA X ORIZ.SUPERIORE |
| 0322730618L | FULCRO BANDIERA -BRUNITO- |

| Codice/Code | Descrizione/Descr./Beschr./Denom. |
|---|---|
| 0322730619B | OCCHIELLO -BRUNITO- |
| 0322730620C | MADREVITE O.S. |
| 0322730621E | VITE TRAP.20X5 SX L=325 |
| 0322730625D | BARRA DI COMANDO |
| 0322730627H | PIATTO 120X0,5 L=140 D7N3 |
| 0322730628A | PIATTO 65X0,5 L=140 D7N2 |
| 0322730629C | GOMMA CONVOGLIATRUCIOLI O.S. |
| 0322730634C | SUPPORTO SCARPETTA PRESSATRICE PER TTL |
| 0322730635E | SCARPA PRESSATRICE ( TTL ) |
| 0322730636G | ALBERO 15H7 94 ( TTL ) |
| 0322730646H | SCARPA PRESSATRICE USCITA O.S. PER TONDINI D=7,8 |
| 0322730648C | SCARPA PRESSATRICE USCITA O.S. PER TONDINI D=10 |
| 0322730650F | SCARPA PRESSATRICE USCITA O.S. PER TONDINI D=14 |
| 0322730651H | SCARPA PRESS.L=260 |
| 0322730652A | PIATTO C72 L=260 |
| 0322730653C | COPERCHIO UT.O.S. L=260 |
| 0322730654E | SCARPA PRESSATRICE H=180 |
| 0322730658D | BARRA DI COMANDO TRASL.ORIZZ.MOTORIZZATA O.I. |
| 0322730661L | SLITTA X PRESSORE SEZ. |
| 0322730662B | PIASTRA X VITE PRESSORE SEZ.-BRUNITO- |
| 0322730663D | PIATTO -BRUNITO- |
| 0322730664F | SCARPA PRESS.USCITA O.S. PER TONDINI D=50 |
| 0322730665H | SCARPA PRESS.USCITA O.S. PER TONDINI D=35 |
| 0322730666A | SUPPORTO SCARPETTA PRESSATRICE PER "TTL" |
| 0322730681B | SCARPA PRESS. PER COLTELLO DIV. SU O.S. |
| 0322730702G | PARALLELOGRAMMO MOBILE SCARPA O.S. |
| 0322730703L | BIELLA-BRUNITO- |
| 0322730704B | ALBERO D15H7 L=56 |
| 0322730705D | CERNIERA X CIL.D=40 -BRUNITO- |
| 0322730706F | PERNO |
| 0322730708A | SCARPA PRESSATRICE X PARALL. |
| 0322730709C | PROTEZIONE PARALL.CUFFIA O.S. |
| 0322730711F | VITE S.F. M25 N.2 PRINCIPI L=605 |
| 0322730712H | PIATTO 50X0,5 L=105 D8N2 |
| 0322730713A | PROTEZIONE DX SU PARALLEL. CUFFIA O.S. |
| 0322730714C | SCARPA PRESSATRICE X PARALLELOGRAMMA L=260 |
| 0322730715E | PROTEZIONE DX SU PARALLEL. CUFFIA O.S. L=260 |
| 0322730718B | CAMICIA |
| 0322730719D | STELO |
| 0322730721G | BIELLA 60X25X58 D17H7 I=35 |
| 0322730722L | ALBERO 15H7 100 |

| Codice/Code | Descrizione/Descr./Beschr./Denom. |
|---|---|
| 0322730723B | COPERCHIO CUFFIA ORIZZ. SUPERIORE |
| 0322730724D | SCARPA PRESSATRICE X PARALLELOGR. PEZZI CORTI |
| 0322730725F | SUPPORTO PRESSATORE USCITA O.S.(COMP.31) |
| 0322730726H | ATTACCO PRESSATORE A PARALLELOGRAMMA IN GHISA |
| 0322730727A | DISTANZIALE X CUFFIA O.S. CON PEZZI CORTI |
| 0322730728C | PERNO 15H7 40 12G8 15 L=40 |
| 0322730731H | SCARPA PRESSATRICE CROMATA |
| 0322730732A | BATTUTA PER MICRO 'TTL' SU O.S. |
| 0322730738D | COPERCHIO CUFFIA O.S. PER ALLEST. PEZZI CORTI |
| 0322730739F | SCHERMO PARATRUCCIOLI |
| 0322730900G | PROLUNGA GUIDA SX PER LAVORARE PEZZI BASSI |
| 0322730901L | SCARPA PRESS.USCITA O.S. PER TONDINI D=6,13 |
| 0322730902B | SCARPA PRESS.USCITA O.S. PER TONDINI D=8,13 |
| 0322730903D | SCARPA PRESS.USCITA O.S. PER TONDINI D=10 |
| 0322730904F | SCARPA PRESS.USCITA O.S. PER TONDINI D=12,15 |
| 0322730905H | SCARPA PRESS.USCITA O.S. PER TONDINI D=14,15 |
| 0322730906A | SCARPA PRESSATRICE PER S.SX IN ACC. |
| 0322730907C | SCARPA PRESSATRICE IN USCITA O.S.(P.R.L.) CLASS |
| 0322730908E | SCARP.PRES. USCITA O.S. X RUOTA TRAINO CROMATA |
| 0322730911A | RULLO TRASC.SUPERIORE DI GUIDA PER TONDINI D=6,13 |
| 0322730912C | RULLO TRASC.SUPERIORE DI GUIDA PER TONDINI D=8,13 |
| 0322730913E | RULLO TRASC.SUPERIORE DI GUIDA PER TONDINI D=10 |
| 0322730914G | RULLO TRASC.SUPERIORE DI GUIDA PER TONDINI D=12,15 |
| 0322730915L | RULLO TRASC.SUPERIORE DI GUIDA PER TONDINI D=14,15 |
| 0322731002C | SUPPORTO AD 'L' PORTAMICRO |
| 0322731011B | SLITTA VERTICALE DX |
| 0322731012D | ALBERO D20 L=690 ECCENTR.BLOCC.1 V.DX |
| 0322731016C | CARTER CHIUSURA V.DX |
| 0322731017E | SLITTA V.DX STD CROMATA |
| 0322731021C | PIASTRA DI SOLL.PER V.DX E V.SX VERS.ELETTR. |
| 0322731022E | PERNO PER BLOCC.SPOST.ASSIALE V.DX E V.SX |
| 0322731023G | PIATTO PER BLOCCAGGIO SPOST.ASSIALE V.DX E V.SX |
| 0322731024L | PIASTRA PER FISSAGGIO CILINDRO PNEUMATICO |
| 0322731025B | ASTA PER BLOCCAGGIO SPOST. V.DX |
| 0322731026D | LEVA DI BLOCCAGGIO SPOST.VERTICALE |
| 0322731027F | PIASTRA PER GUIDA PORTACAMME |
| 0322731028H | PIASTRA PORTA MICRO |
| 0322731029A | ATTACCO PER CILINDRO PNEUMATICO |
| 0322731030B | SLITTA VERTICALE DX ELETTR.CROMATA |
| 0322731031D | SLITTA VERTICALE DX ELETTR. |
| 0322731032F | SLITTA VERTICALE DX.CROMATA |

| Codice/Code | Descrizione/Descr./Beschr./Denom. |
|---|---|
| 0322731033H | SLITTA VERTICALE DX. |
| 0322731034A | MADREVITE PER SOLLEVAMENTO GR. V.DX ( PRL ) |
| 0322731035C | SLITTA V.DX PER GRUPPO P.R.L. |
| 0322731037G | SLITTA V.DX PER GRUPPO P.R.L. CROMATA |
| 0322731102E | VITE TR.20X5 SX L=154 |
| 0322731103G | GUIDA PORTA CAMME "L"=152 |
| 0322731192E | FLANGIA DI ATTACCO MOTORIDUTTORE |
| 0322731212H | COPERCHIO CUFFIA STD V.DX |
| 0322731213A | PIATTO 58X4 L=170 D8N3 -PVC- |
| 0322731214C | RIGA FISSAGGIO GOMMA SU CUFFIA V.DX |
| 0322731401L | SUPPORTO GUIDA PORTA CAMME |
| 0322732001B | STAFFA X MICRO DI FINECORSA IN APERTURA - ZINCATO |
| 0322732002D | PIATTO X MICRO DI FINECORSA IN CHIUSURA - ZINCATO |
| 0322732003F | PIATTO PORTA PRESSACAVI - ZINCATO - |
| 0322732004H | VITE TPN 25X5 SPOST. ASSE CONT. VERT. SX |
| 0322732006C | CAMMA PER AZIONAMENTO MICRO X VERT. SX |
| 0322732007E | ASTA AZIONAMENTO MICRO X VERT. SX - ZINCATO - |
| 0322732009L | SLITTA INFERIORE V.SX ELETTRONICA |
| 0322732011C | SLITTA INFERIORE V.SX. |
| 0322732013G | STAFFA DI AZIONAMENTO FINECORSA IN APERTURA |
| 0322732014L | STAFFA PORTAMICRO DI FINECORSA IN APERTURA |
| 0322732015B | PIATTO PER PRESSACAVO |
| 0322732016D | PIATTO 110X0,5X190 H=180 |
| 0322732017F | PIATTO 110X0,5X213 H=180 (PIASCA) |
| 0322732019A | SUPPORTO AD 'L' PORTA MICRO |
| 0322732021D | STAFFA PER MICRO EXTRA CORSA 260 |
| 0322732031E | FLANGIA 30 130 12 D7L11P6,5N4 M8N4 PASS ( TTL ) |
| 0322732034B | SUPPORTO PER ENCODER EL 38 A ( TTL ) |
| 0322732035D | COPERCHIO 170 436,5 PER PULEGGIE MOT. TTL |
| 0322732042H | SUPPORTO PER LEVA DI GUIDA TTL |
| 0322732043A | STAFFA SUPP.CHIOCC.X MOV.ORIZZ.V.SX. |
| 0322732056H | FLANGIA D90 L6 D51 D6,25 N3PASS. |
| 0322732057A | ALBERO D20 H8 L45 D6 L8,5 |
| 0322732072B | ANELLO BLOC. UT D=40-BRUNITO- |
| 0322732073D | ANELLO BLOC. UT D=50-BRUNITO- |
| 0322732074F | ANELLO BLOC. UT D=1"13/16 -BRUNITO- |
| 0322732204C | SUPPORTO MICRO PER SPIGOLATORE |
| 0322732205E | GOMMA RETINATA PER SPIGOLATORE |
| 0322732206G | LAMIERA X CAMBIO FRESA SPIGOLATORE |
| 0322732207L | LAMIERA SUPPORTO BATTUTA SPIGOLATORE |
| 0322732208B | LAMIERA POSIZIONAMENTO SPIGOLATORE |

| Codice/Code | Descrizione/Descr./Beschr./Denom. |
|---|---|
| 0322732209D | GUIDA SX DOPO V.SX.PER SPIGOLATORE |
| 0322732213B | TARGA X POSIZ. ON-OF SPIGOLATORE 120X100 0,1 |
| 0322732214D | CAMMA ALTEZZA PEZZO SPIGOLATORE |
| 0322732215F | TARGA MILLIMETRATA POSIZ.SPIGOLATORE 60X13 1 |
| 0322732218C | LARDONE POSIZ. ORIZZ. GUIDA USCITA V.S. (CLASS) |
| 0322732219E | GUIDA SX DOPO V.SX.PER SPIGOLATORE CLASS |
| 0322732222A | SCARPA PRESS.USCITA O.S. SPIGOLATORE |
| 0322732223C | FLANGIA DI RITEGNO PER SPIGOLATORE |
| 0322732224E | STELO PER VALVOLA |
| 0322732225G | COPERCHIO PER VALVOLA |
| 0322732226L | LAMIERA SUPPORTO VALVOLA |
| 0322732229F | SCARPA PRES.USCITA O.S. SPIGOLAT. (SENZA RUOTA) |
| 0322732230G | LAMIERA SUPPORTO MICRO X SPIGOLATORE |
| 0322732231L | PIATTO 30X10 L=60 D4.5N3 M6 |
| 0322740010A | FORCELLA TRAINO |
| 0322740011C | ALBERO RUOTE TRAINO |
| 0322740012E | ALBERO 20 157 |
| 0322740013G | BLOCCHETTO ESCLUSIONE PNE. -BRUNITO- |
| 0322740015B | RULLO TRASC.AGGR.ELEVATA D=140 H=25 |
| 0322740018H | ALBERO RUOTE TRAINO FLANGIATO |
| 0322740023H | BARRA DI TORSIONE L=325 -BRUNITO- |
| 0322740024A | BARRA DI TORSIONE L=358-BRUNITO- |
| 0322740027G | TIRANTE AD OCCHIELLO |
| 0322740032G | ALBERO X RULLO SOTTO PIANO |
| 0322740034B | COPERCHIO X SUPP.PIGNONI |
| 0322740035D | SUPPORTO RINVIO TRAINO X UNIV. S.SETXL |
| 0322740036F | BARRA DI TORSIONE D20 L395 -BRUNITO- |
| 0322740037H | LAMIERA X EMERGENZA X UNIV. |
| 0322740038A | ANGOLARE 50X40X3 L80 -BRUNITO- |
| 0322740042H | BARRA PRESSATORI L=480 PER UNIVERS. -BRUNITA- |
| 0322740047L | RULLO TRASCINATORE FLANGIATO PER TTL |
| 0322740048B | STAFFA ATTIVAZIONE MICRO ( TTL ) |
| 0322740049D | STAFFA ATTIVAZIONE MICRO CONTAPEZZI |
| 0322740051G | STAFFA ATTIVAZIONE MICRO X CARIC.BASE 1 |
| 0322740082C | RULLO IN USCITA DOPPIO |
| 0322740083E | RULLO IN USCITA DOPPIO ZIGRINATO |
| 0322740084G | RULLO MOTORIZZATO X PIANO SCAN. (ZIGRINATO) |
| 0322740100B | SUPP.MOTORIZZ.TRAINO KW2,2 |
| 0322740101D | ALBERO PULEGGIA MOTRICE |
| 0322740102F | ALBERO PULEGGIA CONDOTTA |
| 0322740103H | BOCCOLA 10,5 28 15 DC=40X3,5 |

| Codice/Code | Descrizione/Descr./Beschr./Denom. |
|---|---|
| 0322740104A | PULEGGIA DENTATA COND. 26 H150 |
| 0322740106E | BOCCOLA 24 35 4 -BRUNITO- |
| 0322740110C | CAMPANA X PULEGGE ESPANSIBILI |
| 0322740111E | VITE X MOVIM.CAMPANA PULEGGE |
| 0322740112G | PERNO 16 70 D10 D12 |
| 0322740113L | SUPP.COMANDO PUL.ESPANSIBILI |
| 0322740114B | COPERCHIO SUPP.PULEGGE ESPANSIBILI |
| 0322740127L | SUPPORTO RINVIO ANGOL.RID.VF 44 |
| 0322740135F | VITE TPN 30X6 SOLL.TRAV.X VF44 |
| 0322740137A | BARRA TRASMIS.SOLL. TRAVERSA L=319 -BRUNITO- |
| 0322740138C | BARRA DI TRASMISSIONE SOLL.TRAV.L=193-BRUNITO- |
| 0322740140F | PERNO REGOL.VEL.TRAINO |
| 0322740142A | FLANGIA SOLL.TRAVERSA E O.S. -BRUNITO- |
| 0322740144E | PIATTO PORTA INGRASSATORI |
| 0322740147B | VITE TPN 30X6 SOLL. TRAV. PER VF44 H=180 |
| 0322740148D | BARRA DI TRASMISSIONE X SOLL.TRAV. L=153 (HSK) |
| 0322740166B | BARRA DI TRASM. PER SOLL. TR. L=753 |
| 0322740261C | FORCELLA TRAINO X RUOTA TELES. |
| 0322740262E | ALBERO D42 RUOTA TRAINO |
| 0322740263G | ALBERO RUOTA TRAINO FLANG. |
| 0322740264L | BLOCCAGGIO X RUOTA TELESCOPICA |
| 0322740265B | TIRANTE BLOCC.X RUOTA TELES. |
| 0322740266D | LINGUETTA8X7X20 A |
| 0322740267F | GHIERA M30X1 L=5 -BRUNITO- |
| 0322740268H | CONO BLOCCAG.RUOTA TELES. |
| 0322740313D | SUPPORTO MICRO CON ASTA FLESSIBILE (BANDELLA) |
| 0322740422E | VITE 30X6 SOLL. TRAV. X VERS. ELETTRONICA |
| 0322740423G | VITE 30X6 SOLL. TRAV. X VERS. ELETTRONICA H=180 |
| 0322740522G | MOLLA A LAMINA |
| 0322740523L | PIATTO IN NYLON |
| 0322740525D | SUPPORTO PRESSATORE |
| 0322740527H | PIATTO 25X10 L118 |
| 0322740701G | SUPPORTO MOTORIZ. TRAINO CON INVERTER S.SETXL |
| 0322740702L | ANELLO DISTANZIALE PER MOTORE 100 B14 |
| 0322740804F | FORCELLA PER SOLLEVAMENTO RUOTE TRAINO |
| 0322740805H | BARRA DI GUIDA PER SOLLEVAMENTO TRAVERSO |
| 0322740806A | ALBERO PER MOTORID. MVF44 SOLL.FORCELLA TRAINO |
| 0322740807C | SUPPORTO BARRE DI GUIDA |
| 0322740808E | VITE DI MANOVRA TRASLAZ.PIANA TPN 20X5 L=205 |
| 0322740809G | STAFFA MICRO |
| 0322740810H | ATTACCO CILINDRO PER ESCL.PRIMA RUOTA USA |

| Codice/Code | Descrizione/Descr./Beschr./Denom. |
|---|---|
| 0322740811A | TUBO 13,6 16 68 |
| 0322740812C | SUPPORTO PER FINECORSA MULTIPLO |
| 0322740813E | INDICE SOLLEVAMENTO FORCELLA TRAINO |
| 0322740815L | SUPP. MOTORIDUTT.PER SOLL.FORCELLE TRAINO USA |
| 0322740816B | BARRA FILETTATA M10 L=330 |
| 0322740817D | ATTACCO TIRANTE PER FORCELLA TTL |
| 0322740819H | CARTER CATENA MOTORIZZ.SOLL.RUOTE TRAINO |
| 0322740821B | ATTACCO CILINDRO STANDARD |
| 0322740824H | TARGA SOLLEV.FORCELLA TRAINO IN MM. 23X59 0,1 |
| 0322740901B | ALBERO RUOTE TRAINO FLANGIATO |
| 0322740902D | FLANGIA DISTANZIALE PER RULLO SPEC. |
| 0322740921D | PIATTO 40 X 15 X 40 D11 M5 |
| 0322740924A | CARTER PER GR.ANTICOLLISIONE VERT.SX. |
| 0322741001C | PIASTRA FISSA -BRUNITO- |
| 0322741002E | PIASTRA GIREVOLE -BRUNITO- |
| 0322741004L | PERNO X SNODO -BRUNITO- |
| 0322741010B | SQUADRO CHIOCCIOLA -BRUNITO- |
| 0322741011D | VITE TP 20X5 DX |
| 0322741012F | GIUNTO X VITI -BRUNITO- |
| 0322741013H | BARRA DI TORSIONE -BRUNITO- |
| 0322741015C | SQUADRO X F.CORSA -BRUNITO- |
| 0322741016E | SQUADRO X ASTERNO -BRUNITO- |
| 0322741024B | PULEGGIA FOLLE -BRUNITO- |
| 0322741029C | CAMICIA |
| 0322741030D | MOZZO FINALE |
| 0322741031F | CANNOTTO -BRUNITO- |
| 0322741032H | FLANGIA |
| 0322741033A | PERNO CAVO |
| 0322741531G | BARRA DI TRASM. PER SOLLEV.TRAVERSA L.416 COMP.31 |
| 0322750100D | BIELLA X PIANA ENTRATA |
| 0322750102H | PIANETTO X P.ENTRATA |
| 0322750103A | PERNO 30 340 D25 E2 |
| 0322750106G | ALBERO 30 204 |
| 0322750107L | ATTACCO X MOLLA PIANA E.-BRUNITO- |
| 0322750108B | GOMMA CONVOGLIATRUCIOLI |
| 0322750109D | RIGHETTA FISSAGGIO GOMMA -BRUNITO- |
| 0322750111G | PIASTRA COMANDI -BRUNITO- |
| 0322750112L | LEVA MOVIM.PIANA ENTRATA -BRUNITO- |
| 0322750122A | PIANETTO X PIANA ENTRATA CROMATO |
| 0322750163G | PIANETTO SU PIANA D'ENTRATA PER PIANI SCANALATI |
| 0322750188A | PIANETTO X PIANA ENTRATA L=260 |

| Codice/Code | Descrizione/Descr./Beschr./Denom. |
|---|---|
| 0322750189C | PIANETTO X PIANA ENTRATA CROMATO X SEZ.260 |
| 0322750190D | PIANETTO SU PIANA ENTRATA X PIA.SCAN. L=260 |
| 0322750301A | BUSSOLA PORTA SFERA (SPECIALE) |
| 0322750302C | GHIERA M27X2 (SPECIALE) |
| 0322750303E | VITE M27X2 L25 S.T.E.I. (SPECIALE) |
| 0322760001F | BIELLA X GUIDA DX ENTRATA |
| 0322760104E | GUIDA DX USCITA |
| 0322760105G | PERNO 50 55,5 D18 E1 |
| 0322760106L | PERNO 20 53,5 |
| 0322760107B | GUIDA DX ENTRATA L=2000 |
| 0322760108D | GUIDA DX ENTRATA L=2500 |
| 0322760109F | LAMIERA DI CHIUSURA TRA O.S. E GUIDE |
| 0322760110G | LAMIERINO DI CHIUSURA |
| 0322760111L | GUIDA DX ENTRATA L=2000 CON RULLI |
| 0322760112B | GUIDA DX ENTRATA L=2500 CON RULLI |
| 0322760113D | DISTANZIALE X GUIDA -BRUNITO- |
| 0322760114F | VITE BLOCCAGGIO GUIDA -BRUNITO- |
| 0322760115H | GUIDA DX IN ENTRATA L.1180 CON RULLI FOLLI |
| 0322760116A | GUIDA DX IN ENTRATA A FILO QUADRO ELETTR. |
| 0322760118E | SUPPORTO MICRO SU GUIDA PER 'TTL' |
| 0322760120H | GUIDA DX IN USCITA UNIV. S.SETXL |
| 0322760121A | SUPPORTO GUIDA DX IN USCITA UN.S.SETXL-BRUNITO- |
| 0322760122C | SUPPORTO GUIDA DX IN ENTRATA UN.S.SETXL-BRUNITO- |
| 0322760124G | GUIDA DX IN USCITA UNIV. S.SETXL PER SLT A DX |
| 0322760126B | GUIDA DX IN USCITA UNIV. SEP. LIST. CON O.S. |
| 0322760127D | PRIMA GUIDA X SEPARAT. LIST. CON O.S. |
| 0322760128F | SECONDA GUIDA DX X SEPARAT. LISTELLO CON O.S. |
| 0322760129H | GUIDA DX PER SEP.LIST.SU UNIVERS. (PRL) |
| 0322760130L | GUIDA DX IN ENTRATA L=1180 CROMATA |
| 0322760131B | GUIDA FISSA TRA 1° E 2° O.I. COMP.31 |
| 0322760132D | GUIDA DX IN ENTRATA L=2000 CON RULLI CROMATA |
| 0322760133F | GUIDA DX IN ENTRATA L.2000 CROMATA |
| 0322760141C | GUIDA FISSA TRA 1° E 2° O.S. COMP.31 |
| 0322760142E | GUIDA DX USCITA H.40 |
| 0322760161E | DISTANZIALE GUIDE PER PIANI SCANALATI |
| 0322760162G | SUPP. GUIDA DX IN USC.UNIV.X PIANI SCAN-BRUNIT0- |
| 0322760163L | SUPP. GUIDA DX IN ENTR.UNIV.X PIANI SCAN-BRUNIT0- |
| 0322760165D | LAMIERA CONV.TRUCC.SU GUIDA IN ENTR.X PIANI SCAN |
| 0322760169C | BLOCCHETTO X BLOC.GUIDA+CUSC.X PIANI SCAN-BRUNIT0- |
| 0322760171F | PERNO BIELLA GUIDA D'ENTRATA X PIANI SCAN. |
| 0322760173A | GUIDA DX A FINE MACC. CROMATA |

| Codice/Code | Descrizione/Descr./Beschr./Denom. |
|---|---|
| 0322760174C | GUIDA DX IN USCITA UNIVERSALE CROMATA |
| 0322760175E | GUIDA FISSA TRA 1° E 2° O.S. CROMATA COMP.31 |
| 0322760177L | GUIDA DX ENTR.(111/06) |
| 0322760181G | GUIDA DX IN ENTRATA X UNIV. CON ELETTROMAN.COLOMB |
| 0322760182L | GUIDA DX ENTRATA L=1300 CON RULLI |
| 0322760183B | GUIDA DX IN ENTRATA L=2500 X CARICATORE BASE 1 |
| 0322760185F | SUPPORTO MICRO SU GUIDA IN ENTRATA X CARIC.BASE 1 |
| 0322760188C | GUIDA DESTRA IN ENTRATA SENZA RAS.A FILO BASAM. |
| 0322760190F | LIMITATORE DI PASSATA CON CARICATORE BASE 3 |
| 0322760191H | GUIDA DX IN ENTRATA SENZA RASANTE L.2000 |
| 0322760194E | SUPPORTO IN USCITA UNIV.CON LAME PIA.SCAN. |
| 0322760196L | GUIDA DX IN ENTRATA S/RASANTE CROMATO |
| 0322760199F | GUIDA DX IN ENTRATA SENZA RASANTE L.2500 |
| 0322760501G | GUIDA SX CUN UTENSILE A DX U. S.SETXL -BRUNITO- |
| 0322760502L | GUIDA SX CON UTENSILE A SX U. S.SETXL -BRUNITO- |
| 0322760504D | LAMIERA CHIUSURA GUIDA SX PER UNIVERSALE |
| 0322760511H | GUIDA MANUALE IN USCITA |
| 0322760514E | SUPPORTO SQUADRO |
| 0322760515G | GUIDA MANUALE IN USCITA X GR.ASSE CONTINUO (CMP31 |
| 0322770109H | PIATTO 65X65X6 PER INSER. PERNO D'INTERBLOCCO |
| 0322770113F | PERNO SOLLEVAMENTO |
| 0322770129A | ANGOLARE 90X60X6 L=40 CON ASOLE |
| 0322770204L | PIATTO 40X2 L=286 D8N3 PASS. |
| 0322770208H | PIATTO 286X3X226 D8N3 PVC TRASP. |
| 0322770209A | PIATTO 286X3X296 H=180 |
| 0322770216E | TUNNEL X SUPERSET XL 1-5 IN LINEA AL WINDOR |
| 0322770217G | SUPPORTO MICRO X TANDEM IN USC. SENZA UNIV. |
| 0322770221E | PIASTRA PORTA MICRO |
| 0322770304B | PIATTO 70X6 L=85 M6N2 D7N2 |
| 0322770412A | CARTER 'L' DI UNIONE INFERIORE |
| 0322770413C | L DI UNIONE INFERIORE X UNIVERSALE |
| 0322770414E | L DI UNIONE INFERIORE CMP.31 |
| 0322770516B | PIATTO 70X2 L=320 D8N2 |
| 0322770551E | LAMIERA CHIUSURA CAB.COMP.2-6 H=180 |
| 0322775001D | TARGA SCM SUPERSET XL 1200X80 0,1 |
| 0322775002F | TARGA SCMI SUPERSET XL 1200X80 0,1 |
| 0322775003H | TARGA SCM MARUNAKA SUPERSET XL 1200X80 0,1 |
| 0322775004A | TARGA PANNELLO COMANDI 610X165 0,25 |
| 0322775005C | TARGA 0 UT.ORIZZONTALE SUPERIORE 40X60 0,1 |
| 0322775006E | TARGA TRASLAZIONE ASSIALE ORIZZONTALE SUPER. 40X60 |
| 0322775007G | TARGA 0 UT.ORRIZONTALE INFERIORE 40X25 0,1 |

| Codice/Code | Descrizione/Descr./Beschr./Denom. |
|---|---|
| 0322775008L | TARGA 0 UT.VERTICALE DX 40X25 0,1 |
| 0322775009B | TARGA 0 UT.VERTICALE SX 40X25 0,1 |
| 0322775010C | TARGA TRASLAZIONE ASSIALE VERTICALE DX 40X25 0,1 |
| 0322775011E | TARGA TRASLAZIONE ASSIALE VERTICALE SX 40X25 0,1 |
| 0322775012G | TARGA INDICAZIONE LARGHEZZA PEZZO 40X25 0,1 |
| 0322775013L | TARGA TRASLAZIONE ASSIALE ORIZZ.INFERIORE 40X25 0, |
| 0322775014B | TARGA INDICAZIONE ALTEZZA PEZZO 70X35 0,1 |
| 0322775016F | TARGA C/INDIC.ASPORTAZ. GUIDA ENTRATA (MM) |
| 0322775017H | TARGA CON INDIC. PER MOVIMENTAZIONE MACCHINA |
| 0322775018A | TARGA C/INDIC. ASPORTAZ. PIANA ENTRATA 0,1 |
| 0322775019C | TARGA BLOCCAGGIO ROTAZIONE PER UNIVERSALE 40X25 0, |
| 0322775021F | TARGA MOV. ORIZZONT. PER UNIVERSALE 40X25 0,1 |
| 0322775022H | TARGA MOVIMENTO VERTICALE PER UNIVERSALE 40X25 0,1 |
| 0322775023A | TARGA ROTAZIONE PER UNIVERSALE 40X25 0,1 |
| 0322775024C | TARGA C/INDIC.ASPORTAZ. P.ENTRATA (IN POLL.) 0,1 |
| 0322775025E | TARGA C/INDIC.ASPORTAZ. GUIDA ENTRATA (POLL) 0,1 |
| 0322775026G | TARGA SOLLEV.FORCELLA TRAINO IN INCH 23X59 0,1 |
| 0322775027L | TARGA SETUP 1° ORIZZ.SUP. 80X60 0,1 |
| 0322775030E | TARGA CON INDICAZIONI X INGRASSAGGIO 60X90 0,1 |
| 0322775031G | TARGA BLOC.TRASLAZ.ASSIALE VERT.DESTRO 40X25 0,1 |
| 0322775032L | TARGA BLOC.TRASLAZ.ASSIALE VERT.SINISTRO 40X25 0, |
| 0322775033B | TARGA DI BLOCCAGGIO LARGHEZZA PEZZO 40X25 0,1 |
| 0322775041H | TARGA SUPERSET XL 707,5X100 0,1 |
| 0322775042A | TARGA SUPERSET CLASS 808X100 0,1 |
| 0322775043C | TARGA SUPERSET CLASS H=100 (2005) 0,1 |
| 0322775044E | TARGA SUPERSET XL H=100 (2005) 0,1 |
| 0322775045G | TARGA TRIANGOLINI PER SUPERSET XL COMP.1-5 328X10 |
| 0322775046L | TARGA TRIANGOLINI PER SUPERSET XL COMP.2-6 1161X10 |
| 0322775047B | TARGA TRIANGOLINI PER SUPERSET CLASS 804X104 0,1 |
| 0322781005A | MARTELLETTO |
| 0322781006C | ALBERO D=20 L=337 |
| 0322781013G | BATTUTA PER TAGLIO MULTILAME |
| 0322781014L | PIASTRA DI SCORRIMENTO |
| 0322781015B | PORTA COLTELLO |
| 0322781016D | COLTELLO DIVISORE CORTO SP=2.2 |
| 0322781017F | COLTELLO DIVISORE LUNGO SP=2.2 |
| 0322781018H | PERNO 18 40 D10 M8 PER BATTUTA FINECORSA |
| 0322781026E | SUPPORTO PRESSATORE USCITA O.S. |
| 0322781029B | COLTELLO DIVISORE X LAME 250 LUNGO |
| 0322781031E | COLTELLO DIVISORE CORTO SP=4 |
| 0322781032G | COLTELLO DIVISORE LUNGO SP=5,4 |

| Codice/Code | Descrizione/Descr./Beschr./Denom. |
|---|---|
| 0322790201G | SLITTA A CROCE S.SET XL UNIVERSALE |
| 0322790202L | LARDONE PER UNIV. S.SETXL |
| 0322790203B | BARRA SCANALATA UNIVERSALE SUPERSETXL |
| 0322790204D | INGRANAGGIO CONICO 1,5 25 10 A45 D20 |
| 0322790206H | VITE TR. 30X15 2 PRINC. SX LTOT.=465 |
| 0322790207A | VITE TPN 20X5 L=630 LTOT=795 UNIV. SUPERSETXL |
| 0322790209E | RASCHIATORE PER BARRA SCANALATA |
| 0322790301L | SLITTA PORTA GRUPPO UNIVERSALE S.SETXL |
| 0322790302B | FLANGIA DI ROTAZIONE |
| 0322790303D | VITE S.F. ROTAZIONE GRUPPO UNIVERSALE SUPERSETXL |
| 0322790304F | FRENO CEPPO PER BLOCCAGGIO UNIVERSALE SUPERSETXL |
| 0322790306A | CHIOCCIOLA FLANGIATA 30X15 SX SUPERSETXL |
| 0322790307C | PIGNONE 3/8 X 7/32 24 D15 30 |
| 0322790309G | MORSETTO X BLOCCAGGIO UNIV. -BRUNITO- |
| 0322790310H | SUPP. CHIOCCIOLA UNIVERS. S.SETXL -BRUNITO- |
| 0322790313E | VITE S.F. X RINVIO |
| 0322790361F | SLITTA VERT.GR.UNIVERSALE CON ELETTROMAD. COLOMBO |
| 0322790362H | SUPP.CHIOCCIOLA PER UNIV. CON MANDRINO COLOMBO |
| 0322790363A | INTERFACCIA TRA SLITTA VERT. E MANDRINO COLOMBO |
| 0322790401B | CARTER X PULEGGE X UNIVERSALE |
| 0322790402D | CARTER PER UNIVERSALE SUPERSETXL |
| 0322790403F | PIASTRA SUPPORTO MOTORE UNIVERSALE SUPERSETXL |
| 0322790404H | CILINDRO TOUPYE S.SET XL UNIVERSALE |
| 0322790405A | DISCO ANTIVIBRANTE P.URETANO |
| 0322790411C | PULEGGIA CONDOTTA PER UNIV. CON INVERTER |
| 0322790412E | STAFFA PER PROXIMITY SU UNIVERSALE |
| 0322790502F | BOCCA DI ASPIRAZIONE PER UNIV. SUPERSETXL |
| 0322790503H | STAFFA SUPPORTO CUFFIA UNIVERSALE |
| 0322790504A | COPERCHIO PER CUFFIA UNIVERSALE |
| 0322790505C | LAMIERA DI CHIUSURA PER CUFFIA UNIVERS.-RAL9002- |
| 0322790562C | SQUADRETTO 25X45 L=56 SU CUFFIA PER ELETTROMANDR. |
| 0322790602H | SLITTA PORTA GRUPPO SEPARAT. LISTELLO ( PRL ) |
| 0322790604C | PROLUNGA PISTONE PNE.DI TRASLAZ.ORIZZ. ( PRL ) |
| 0322790605E | FLANGIA PORTA PISTONE PNE. PER ESC. ( PRL ) |
| 0322790606G | FLANGIA SU CHIOCCIOLA PORTA REVOLVER |
| 0322790608B | PIATTO 50X5 L=300 M4N2 |
| 0322790609D | PIATTO 50X5 L=180 D7N2 |
| 0322790721A | SLITTA PORTA GRUPPO UNIVERSALE |
| 0322790722C | FLANGIA DI ROTAZIONE GRUPPO UNIVERSALE |
| 0323835601B | BOCCOLA 5 16 25 |
| 0324140005H | RULLO TRASCINAT.SUP.AD AGGRESSIVITA'D=140 L=11 |
| 0324141308C | PERNO FULCRO PLG.FOLLE X ESTR.CING.C.6943 A/2014 |
| 0324141309E | BOCCOLA 15,5 20 5 EX DISTANZIALE |
| 0324141315G | PERNO FULCRO BIELLE ESTRATT.A CING.C.6943 A/2014 |
| 0324150403E | SOFFIATORE SU PIANA D'ENTRATA |
| 0324172915H | GUIDA DA PIALLA A VERT.DX CROMATA C.7506 |
| 0324190811L | MOLLA TRAZIONE L=56 DE15 DF2 |
| 0324330313B | RIPARTITORE A 4 VIE M10X1 |
| 0324350031G | BOCCOLA D=12-8,5 L=11,5 |
| 0325210300A | DISTANZIALE PER MICRO |
| 0325436700C | MOLLA ELICOIDALE CILINDRICA A COMPRESSIONE |
| 0326215301A | MOSTRINA FISSAGGIO LENTE |
| 0326227315E | LENTE PER INDICE |
| 0326422704G | PROFILO GUIDA SEGA L=1200 |
| 0327330105G | BOCCOLA 1'1/2 67 7 (SPECIALE) |
| 0327331100G | INGRANAGGIO CONICO |
| 0327340300C | VITE PRESSIONE TRAINO |
| 0327364600H | LARDONE PER PIASTRA MOTORE |
| 0327430300B | RONDELLA SERRAGGIO UTENSILI |
| 0331140023A | ESTRUSO 6 USCITE X GRUPPO ELETTROVALVOLE ARIA RTC |
| 0331514001F | FORMAGELLA DI APPOGGIO H=170 D=150 (1050 MM) |
| 0331514002H | FORMAGELLA DI APPOGGIO H=105 (945 MM) |
| 0331550204B | MOLLA EL.CIL.RETT COMPR 3,20 =LF 1,50 =HF 15,5 =D |
| 0331550282F | PULEGGIA 18 52 FC D 32 |
| 0331919070B | GUIDA PORTACAMME "2" L=140 |
| 0333140184F | MOLLA COMP.L=98 DE27 DF3,5 |
| 0333150203L | PROTEZIONE RASANTE |
| 0333531127L | PIATTO DI SCORR.X SLITTA COLT.DIVIS.METHOD BRUNITO |
| 0333531135F | PIATTO X REVOLVER SU COLT.DIVISORE METHOD BRUNITO |
| 0333531201F | CORPO PER RECUPERO LISTELLO E SCAVO FERRAMENTA |
| 0333531203A | ECCENTRICO X MOTORE SEPARATORE LISTELLO BRUNITO |
| 0333531205E | PULEGGIA MOTORE 50 HZ 3 GOLE X SEP.LIST.SCAVO FERR |
| 0333531206G | PULEGGIA CONDOTTADP=71 3 GOLE X SEP.LIST.SCAVO FE |
| 0333531208B | GHIERA M50X1,5 ANTX ALBERO SEP.LISTELLO METHOD |
| 0333531209D | GHIERA M85X2 INTERNA ANT.X MANDR.SEPARATORE LIST. |
| 0333531210E | LAM.DI CHIUSURA POST.CORPO SEPARATORE LIST. METHOD |
| 0333531211G | LAM.DI CHIUSURA ANT.CORPO SEPARATORE LIST. METHOD |
| 0333531213B | BOCCOLA FILET.X BLOCC.ALBERO SEP.LISTELLO BRUNITO |
| 0333531214D | ANELLO DIST.X CUSC.ALBERO RECUPERO LISTELLO |
| 0333531238E | STAFFA X CUFFIA SEP.LIST.E SCAVO FERRAMEN. BRUNITO |
| 0333531247D | ALBERO CONDOTTO D=30 X SEPARATORE DI LIST. METHOD |
| 0333531283L | PULEGGIA MOTORE 60 HZ 3 GOLE X SEP.LIST.SCAVO FERR |

| Codice/Code | Descrizione/Descr./Beschr./Denom. |
|---|---|
| 0333531301H | COLTELLO AD L PER REC.LIST. ( PRL ) |
| 0333531302A | MOLLA PRESSATRICE ORIZZ. SEP. LIST. ( PRL ) |
| 0333531304E | MOLLA X SEPAR.LISTELLO P.R.L. |
| 0333531309F | GUIDA LISTELLO |
| 0333531318E | DISTANZIALE X SCIVOLO -BRUNITO- |
| 0333531319G | COLTELLO AD L PER REC.LIST. (HUET) |
| 0333535056C | PIATTO 70X5 L=80 SUPP. FINECORSA |
| 0334019601F | TARGHETTA MANDRINO |
| 0334042003F | BOCCOLA 16 20 5 |
| 0336210009G | MOLLA COMP.L=13 DE11 DF 1 DOT. GERMANIA |
| 0336223853C | ANGOLARE X MOLTIPL.PRESS.-ZINCATO- |
| 0336238261D | TARGA CON INDICAZ. X MANUT. ELMANDR. |
| 0336500265A | ASS.CAVO M8 SNAP 2P FEM 90GR L=5MT P.MOBILE CL6 |
| 0338435338B | SUPPORTO SENSORE -BRUNITO- |
| 0339010902F | TARGA X ALBERO INDIC.DIAM. N GIRI S.ROT. (DX) 85X5 |
| 0339014208H | PIASTRA PORTA MICRO |
| 0339024300E | RIDUZIONE DA M10X1 A 1/8G ES. 13 (TTL) |
| 0339049000H | PERNO D=8 PER FORCELLA |
| 0339057710E | BOCCOLA 10 16 28 DC=24X14 (TTL) |
| 0339715043F | DISTANZ. 20/30/9 -BRUNITO- |
| 0339730020F | LARDONE DI GUIDA 200X11X52,32 |
| 0339730022A | LARDONE X SLITTA COLTELLO DIVISORE |
| 0339730032B | PIATTO 30X20 L=127 MARTELLO ANTIRITORNO-BRUNITO- |
| 0339730033D | GHIERA 8 18 30,5 D14 FULCRO X MARTELLO ANTIRIT. |
| 0339730401E | STAFFA SUPP.CUFFIA-BRUNITO- |
| 0339735021D | GHIERA D.40-M60X2-9 |
| 0339765056E | TARGA SCRITTA LOGO SCM 625X100 0,1 |
| 0339765057G | TARGA SCRITTA LOGO SCMI 661,5X100 0,1 |
| 0339765058L | TARGA FASCIA TRIANGOLI H=100 0,1 |
| 0339765072H | TARGA LOGO SCMI -2005 649X100 0,5 |
| 0352100101B | LINGUETTA DI GUIDA |
| 0352100102D | INTERFACCIA TRA BASAM. E SQUADRO |
| 0352100104H | PIASTRA DI BASE CARICATORE CS1 |
| 0352100105A | PERNO DI FULCRO CORPO OSCILLANTE |
| 0352100106C | FULCRO POSTERIORE CORPO OSCILLANTE |
| 0352100108G | MOZZO SOSTEGNO RUOTE CARICATORE CS1 |
| 0352100109L | RUOTA DENTATA H=10 PER CARICATORE CS1 |
| 0352100110A | RUOTA DENTATA H=20 PER CARICATORE CS1 |
| 0352100111C | BARRA REGOLAZIONE VERTICALE |
| 0352100112E | SQUADRETTO INCLINATO |
| 0352100113G | SUPPORTO FINE CORSA AVANTI |

| Codice/Code | Descrizione/Descr./Beschr./Denom. |
|---|---|
| 0352100117F | DADO QUADRO M8 |
| 0352100119A | SQUADRO SOSTEGNO PROFILATO IN ALLUMINIO |
| 0352100121D | ANGOLARE ARRESTO PEZZI SU CARICATORE |
| 0352100122F | ANGOLARE SOSTEGNO VALVOLA 228.32.4.1 |
| 0352100125C | TARGHETTA PER OLIO IDR. CENTR. |
| 0352100127G | ANGOLARE SOSTEGNO PRESSATORE ORIZZ. SU CS1 |
| 0352100144C | RUOTA DENTATA H=8 CS1 -BRUNITO- |
| 0366180010F | TARGA LOGO SCM H=100 0,1 |
| 0366535401E | INTERFACCIA RID.VF44-BRUSHLESS |
| 0366540107H | ALBERO SOLL.TRAINO |
| 0366540108A | COPERCHIO X SCATOLA SOLL.TRAINO |
| 0366542532B | PULEGGIA DENTATA AT5 Z=48 |
| 0366580019A | PERNO DI AGGANCIO PIGNA MOBILE |
| 0366580020B | SUPPORTO CONSOLLE |
| 0387672010F | RACC.CALZ. "L" M.6X0,75 E=4 |
| 0510130220F | BATTUTA |
| 0510140009B | SUPPORTO BARRA P.TANDEM |
| 0510871302H | BOCCOLA 30 44 10 CON LINGUETTA - BRUNITO - |
| 0511131118D | ASTA COMANDO BLOCC. V.SX |
| 0511131403H | BANDELLA X TTL -BRUNITO- |
| 0511131408L | SUPPORTO TASTATORE |
| 0511133700A | SCARPA PRESS.SEZ.SX |
| 0511133703G | SCARPA PRESS.SEZ.DX |
| 0511136700D | SLITTA ATTACCO MOTORE-BRUNITO- |
| 0511136704C | ASTA SOLLEV.V.SX L=305 |
| 0511136902C | BARRA DI MANOVRA |
| 0511140535L | SUPPORTO CURVO X CONTAMETRI |
| 0511190105H | COPERCHIO CUFFIA UNIVERSALE |
| 0511190417A | SUPPORTO MOTORE PER UNIVERSALE (HUET) -BRUNITO- |
| 0511190419E | SLITTA A CROCE |
| 0511190420F | FLANGIA X CHIOCCIOLA |
| 0511190427B | CUFFIA X LAME D=300 DX |
| 0511190428D | CUFFIA X LAME D=300 SX |
| 0511190429F | COPERCHIO CUFFIA |
| 0511190430G | GUIDA DX |
| 0516036600B | ANELLO CON DENT.ESTERNA C/CHIAVETTA 35 |
| 0516330380A | PROLUNGA PER CHIAVE A MANOVELLA (BRUNITO) |
| 0519410084F | MANOVELLA CON CHIAVE DM.16 |
| 0519413606H | PROTEZIONE SU PIANA ENTR.CON CARICATORE BASE 1 |
| 0519433357D | INGRASSATORE PER CILINDRI TOUPIE |
| 0519435321L | PULEGGIA MOTRICE DENTATA HZ 50 44 H200 |

| Codice/Code | Descrizione/Descr./Beschr./Denom. |
|---|---|
| 0519435323D | PULEGGIA MOTRICE DENTATA HZ 60 40 H200 |
| 0519441208H | RULLO TRASCINATORE FLANGIATO GOMMATO H=20 |
| 0519441211D | RULLO TRASCINATORE FLANGIATO GOMMATO H=10 |
| 0519450146G | RISCONTRO ANTERIORE |
| 0519480202C | ATTACCO PER PATTINO BRUNITO |
| 0521930031G | CARTER DI PROTEZIONE PER SLITTA ORIZZ. |
| 0521930410B | CONTROLEVA TTL |
| 0521930413H | SCATOLA AZIONAMENTO TTL |
| 0521930416E | SLITTA PER MICRO ASPORTAZIONE TTL |
| 0521930417G | COPERCHIO PER SCATOLA AZIONAMENTO TTL |
| 0521930455G | PROTEZIONE RUOTA TRAINO |
| 0521940117C | BARRA ESAGONALE FLANGIATA (BRUNITO) |
| 0521940598C | RULLO GOMMATO A SETTORI L=50 |
| 0521960114A | SUPPORTO RUOTA IN ENT. SU GUIDA DEL V.SX (BRUNITO) |
| 0521960312A | STAFFA PORTA GUIDA SX DOPO V.S. |
| 0521960607G | STAFFA PER VITE DI REGISTRAZIONE |
| 0521960704C | SUPPORTO PRESSATORE DESTRO |
| 0521960705E | SUPPORTO PRESSATORE SINISTRO |
| 0521990242H | SUPPORTO SCORREVOLE PER COLTELLI DIVISORI (SPEC.) |
| 0522340137A | RUOTA PER PRESSORE CON CUSCINETTO |
| 0522710001L | BASAMENTO SUPERSET XL COMPOS. 1-5 |
| 0522710002B | BASE S.SET XL COMP.2-6 (MANCA DISEGNO) |
| 0522710003D | BASAMENTO SUPERSET XL COMP.31 |
| 0522710018F | RIGHETTA CON TURCITE PER V.SX TTL |
| 0522710021B | BASAMENTO SUPERSET XL COMP.1-5 TTL |
| 0522710022D | BASAMENTO SUPERSET XL COMP.2-6 TTL |
| 0522710041D | BASAMENTO SUPERSET XL COMP.1-5 SOFFIO D'ARIA |
| 0522710042F | BASAMENTO SUPERSET XL COMP.2-6 SOFFIO D'ARIA |
| 0522710043H | BASAMENTO SUPERSET XL COMP.1-5 SOFFIO D'ARIA TTL |
| 0522710044A | BASAMENTO SUPERSER XL COMP.2-6 SOFFIO D'ARIA TTL |
| 0522710051E | BASAMENTO COMP.31 CON SOFFIO ARIA |
| 0522710052G | BASAMENTO SUPERSET CLASS TTL |
| 0522710060D | BASAMENTO S.SET CLASS X MADR. HSK63F V.DX V.SX |
| 0522710061F | BASAMENTO S.SET XL PER HSK (COM.2-6)LAVORATO |
| 0522710108G | SCATOLA PORTA INGRASSATORI |
| 0522710121D | STAFFA PORTAMICRO PER MOV. VERT. O.S. H=180 |
| 0522710125C | STAFFA PORTA MICRO PER MOV. VERT. O.S. |
| 0522720114B | PIANA 253X25 L=330 CON INSERIMENTO IN REXILON STD |
| 0522720116F | PIANA 253X25 L=700 CON INSERTO REXILON CON RULLO |
| 0522720120D | PIANA 253X25 L=700 CON INSERTO REX DOPPIO RULLO |
| 0522720414H | PIANA 253X25X330 CON INS.REX CROMATA |

| Codice/Code | Descrizione/Descr./Beschr./Denom. |
|---|---|
| 0522720416C | PIANA 253X25 L=700 INS.REX C./RULLO CROMATA |
| 0522730137C | SLITTA ATTACCO MOTORE -BRUNITO- |
| 0522730143E | ASTA SOLLEVAMENTO V.SX |
| 0522730149H | ECCENTRICO X BLOCC.VERT. |
| 0522730151B | TIRANTE AD OCCHIELLO |
| 0522730153F | ASTA COMANDO BLOCC.V.SX |
| 0522730170B | FLANGIA DI RITEGNO |
| 0522730184B | COPERCHIO CUFFIA V.SX UT.H=180 |
| 0522730191F | CHIUSURA BANDELLA |
| 0522730193A | CONVOGLIATORE FISSO CUFFIA V.SX -ZINCATO- |
| 0522730300H | SUPPORTO MOTORE O.I. -BRUNITO- |
| 0522730506F | SUPPORTO PER INDICATORE NUMERICO |
| 0522730601G | CUFFIA X ORIZZ.SUPERIORE |
| 0522730617B | BANDIERA MOTORE O.S.CARCASSA 132 |
| 0522730632C | SCARPA PRESS. DOPO O.SX CON INSERTO IN REXILON |
| 0522730633E | BANDIERA MOTORE O.S.CARCASSA 100 E 112 |
| 0522730637D | CUFFIA PER O.S. TTL |
| 0522730701L | CUFFIA O.S. |
| 0522730716B | CUFFIA ORIZZONTALE SUPERIORE |
| 0522730717D | ATTACCO PRESSATORE A PARALLELOGRAMMA |
| 0522730803F | PULEGGIA MOTRICE 60 HZ DENTATA 38 H 200 F |
| 0522730932L | SCARPA PRESS. DOPO O.S. CON INSERTO IN REXILON |
| 0522731036L | BASE DI FISSAGGIO PISTONE PNEUMATICO ( PRL ) |
| 0522731111H | BARRA DI MANOVRA V.DX |
| 0522731126A | ASTA SCANALATA PER SPOSTAM.ASSIALE V.DX. |
| 0522731211A | CUFFIA ASPIRAZIONE V.DX STD |
| 0522731215L | COPERCHIO CUFFIA V.DX UT.H=180 |
| 0522732008B | SLITTA ATTACCO MOTORE V. SX -BRUNITO- |
| 0522732018C | COPERCHIO CUFFIA V.SX H=180 |
| 0522732023C | ASTA COMANDO BLOCC.VERT. V.SX (SPECIALE) |
| 0522732032B | SUPPORTO VITE POSIZ.ORIZ.E MOTORE TTL |
| 0522732036A | SCATOLA VISUALIZZATORE DI QUOTA |
| 0522732041A | SUPPORTO PRESSATORE SU V.SX PER TTL |
| 0522732046B | SUPPORTO SCATOLA TTL |
| 0522732047D | LEVA X TTL (SUPERSET XL) |
| 0522732061C | ASTA SCANALATA PER SPOSTAM.ASSIALE V.SX. |
| 0522732065B | SCATOLA DERIVAZIONE CAVI PER 4 ASSI MOTORIZ. |
| 0522732104E | PROLUNGA PER GUIDA SX. |
| 0522732106L | PROLUNGA PER GUIDA SX. |
| 0522732201A | SUPPORTO X GRUPPO SPIGOLATORE |
| 0522732202C | SUPPORTO MOBILE X ELETTROMANDRINO SPIGOLATORE |

| Codice/Code | Descrizione/Descr./Beschr./Denom. |
|---|---|
| 0522732203E | CUFFIA SPIGOLATORE |
| 0522732210L | STAFFA PORTA GUIDA SX PER SPIGOLATORE |
| 0522732227F | STAFFA PORTA GUIDA SX PER SPIGOLATORE |
| 0522732228H | LAMIERA SUPPORTO BATTUTA CARRO SPIGOLATORE |
| 0522740028D | RULLO TRASCINATORE GOMMATO H=25 |
| 0522740031L | PIGNONE CONDOTTO Z=25 RULLO MOT. |
| 0522740033D | SUPPORTO PIGNONI X RULLO SOTTO PIANO -BRUNITO- |
| 0522740041A | SUPPORTO PRESSATORI PER UNIVERSALE -BRUNITO- |
| 0522740046B | FORCELLA TRAINO ( TTL ) |
| 0522740116A | TRAVERSA TRAINO |
| 0522740117C | COLONNA DI SOLLEVAMENTO TRAVERSA |
| 0522740141C | TRAVERSA TRAINO S.SET XL UNIVERSALE |
| 0522740143G | COLONNA O.S. E SOLL.TRAINO |
| 0522740146D | STAFFA PER PORTACAMME GRUPPO O.S. |
| 0522740158L | STAFFA PER PORTACAMME GR. O.S. H=180 |
| 0522740161E | COLONNA X O.S. SOLL.TRAV.TRAINO (CLASS) |
| 0522740162G | COLONNA X O.S. SOLL.TRAV.TRAINO CON 'TTL' |
| 0522740185F | COLONNA PER O.S.E SOLL.TRAV.TRAINO TTL |
| 0522740396D | SUPPORTO TANDEM L=220 IN ENTRATA X CARIC.BASE 1 |
| 0522740397F | SUPPORTO TANDEM L.220 X CARIC.BASE1 CON CAPOTE |
| 0522740521L | SUPPORTO CURVO X CONTAMETRI -BRUNITO- |
| 0522740524F | SUPP.CURVO X CONTAMETRI CON GR.SPIGOLATORE |
| 0522740526A | SUPPORTO CONTAMETRI |
| 0522740801D | TRAVERSA TRAINO COMP.1-5 |
| 0522740802F | TRAVERSO SOLLEVAMENTO FORCELLE TRAINO |
| 0522740818A | SUPPORTO BARRA PORTA TANDEM PER TRAVERSA MOBILE |
| 0522740822H | STAFFA PER GUIDA PORTACAMME |
| 0522740823A | TRAVERSA TRAINO COMP. 2-6 |
| 0522740850G | TRAVERSA TRAINO SPECIALE |
| 0522740922A | MENSOLA PORTA SENSORI AD INDUZIONE |
| 0522740923C | BANDELLA SU RUOTE FLANGIATE |
| 0522741003B | PIATTAFORMA RUOTE |
| 0522741009E | SQUADRO X VITE |
| 0522741014E | BRACCIO X TENDICATENA -BRUNITO- |
| 0522741501H | TRAVERSA TRAINO S.SET XL COMP.31 |
| 0522750101A | PIANA ENTRATA L=2000 SUPER SET 99 |
| 0522750110L | PIANA ENTRATA L=2500 SUPER SET 99 |
| 0522750116C | PIANA D'ENTRATA L=2500 CON SMUSSO X CARIC.BASE 1 |
| 0522750121C | PIANA ENTRATA L=2000 CROMATA |
| 0522750123G | PIANA D'ENTRATA L.2000 PER PIANI SCANALATI CROMATA |
| 0522750124L | PIANA D'ENTRATA L.2500 PER PIANI SCANALATI CROMATA |

| Codice/Code | Descrizione/Descr./Beschr./Denom. |
|---|---|
| 0522750125B | PIANA DI ENTRATA L.1180 CROMATA |
| 0522750126D | PIANA D'ENTRATA L=1180 A FILO QUADRO ELETTR. |
| 0522750127F | PIANO ENTRATA L=2000 CON LUBRIFIC. |
| 0522750128H | PIANA D'ENTRATA L=2000 CON LUB. CROMATA |
| 0522750129A | PIANO ENTRATA L=2000 C/SFERE C/LUBRIF. CROMATA |
| 0522750130B | PIANA ENTRATA L=2500 CROMATA |
| 0522750131D | PIANA D'ENTRATA L=2500 CROMATA PER CARICATORE |
| 0522750161G | PIANA D'ENTRATA L.2000 PER PIANI SCANALATI |
| 0522750162L | PIANA D'ENTRATA L.2500 PER PIANI SCANALATI |
| 0522750180G | PIANA ENTRATA L=2000X260 |
| 0522750181L | PIANA D'ENTRATA L.2000 X PIA.SCANALATI L=260 |
| 0522750182B | PIANA ENTRATA L=2000 CROMATA L=260 |
| 0522750183D | PIANA ENTRATA L.2000 X PIA.SCA. CROMATA L=260 |
| 0522750184F | PIANA ENTRATA L=2500X260 |
| 0522750185H | PIANA D'ENTRATA L.2500 PER PIA.SCAN. L=260 |
| 0522750186A | PIANA ENTRATA L=2500 CROMATA X SEZ.260 |
| 0522750187C | PIANA ENTRATA L.2500 X PIA.SCAN. CROMATA L=260 |
| 0522750191A | PIANO ENTRATA L=1300X260 |
| 0522750192C | PIANA DI ENTRATA L=260 CROMATA FILO ARMADIO ELET. |
| 0522760164F | GUIDA DX IN ENTRATA L=2500 X PIANI SCAN. |
| 0522760166A | GUIDA DX IN ENTRATA L=2000 X PIANI SCAN |
| 0522760167C | GUIDA DX IN ENTRATA L=2000 CON RULLI X PIANI SCAN |
| 0522760168E | GUIDA DX IN ENTRATA L=2500 CON RULLI X PIANI SCAN |
| 0522760184H | LEVA PER MICRO SU GUIDA IN ENTRATA X CARIC.BASE 1 |
| 0522760193G | GUIDA DX IN ENTRATA UNIV.CON LAME PIA.SCAN. |
| 0522760197F | RISCONTRO ANTERIORE CROMATO |
| 0522760503F | QUADRO DI SOSTEGNO GUIDE SX L=260 |
| 0522770112H | PANNELLO PORTA COMANDI |
| 0522770116G | COPERCHIO SUPP.BANDELLA |
| 0522770118B | SPALLA DX |
| 0522770121G | SUPPORTO PER BANDELLA CON TTL |
| 0522770122L | BANDELLA EMERGENZA PER TTL S.SET XL |
| 0522770127A | SUPPORTO PER BANDELLA CON TTL ( CS1 ) |
| 0522770134E | SUPPORTO PER BANDELLA COMP.31 - TTL |
| 0522770212A | SPALLA SX |
| 0522770213C | COLONNA X SOLLEV.MACCHINA C/UNIV. |
| 0522770214E | TRAVERSA CABINATURA X UNIVERSALE |
| 0522770215G | SPALLA SX X UNIVERSALE |
| 0522770218D | SUPPORTO PER SLITTA PORTA MICRO |
| 0522770219F | SPALLA SINISTRA PER UNIVERSALE CON P.R.L. |
| 0522770311A | TRAVERSA CABINATURA |

| Codice/Code | Descrizione/Descr./Beschr./Denom. |
|---|---|
| 0522770312C | TRAVERSA PER CABINATURA S.SET XL CMP.31 |
| 0522770402D | SPORTELLO POSTERIORE |
| 0522770404H | SPORTELLO POSTERIORE X UNIVERSALE |
| 0522770405A | SPORTELLO POSTERIORE MACHHINA O.I. HP30 |
| 0522770406C | SPORTELLO POSTERIORE CMP.31 |
| 0522770501D | LAM DI CHIUSURA FRONTALE H=180 |
| 0522770502F | LAM. DI CHIUSURA FRONTALE X CABINATURA H LAV.180 |
| 0522770511E | SPALLA DX PER H=180 |
| 0522770514B | LAMIERA CHIUSURA SPONDA DX PER H=180 |
| 0522770521F | SPALLA SX PER H=180 |
| 0522770522H | LAMIERA CHIUSURA SPONDA SX PER H=180 |
| 0522770552B | LAM. CHIUSURA CAB.COMP.2-6 H=180 |
| 0522770553D | SCATOLA PER V.SX CAPOTE IN VERSIONE L=260 H =120 |
| 0522770554F | SCATOLA PER CAPOTE SPEC. |
| 0522770561A | SPALLA SX PER UNIV. H=180 |
| 0522770571B | COLONNA PER SOLL. MACC CON UNIVER. H=180 |
| 0522770802C | SUPPORTO PIGNA S.SET XL |
| 0522780064H | CARTER A BORDO MACCHINA PER CONSOLE S.SET XL |
| 0522781002H | BANDELLA PORTA MARTELLETTI |
| 0522781003A | SUPP.BANDELLA PER MARTELLETTI ANTIRITORNO |
| 0522781004C | SUPPORTO ASSIEME MARTELLETTI |
| 0522781011G | SUPPORTO MOBILE PER TAGLIO MULTILAME |
| 0522781012L | SUPPORTO PER TAGLIO A LAME |
| 0522781030G | SUPPORTO GRUPPO COLTELLI |
| 0522790205A | SUPPORTO COPPIA CONICA UNIVERSALE SUPERSETXL |
| 0522790208G | ASTA SCANALATA PER ROTAZ. UNIVERSALE SUPERSETXL |
| 0522790308L | PIGNONE 3/8 X 7/32 Z=12 MOTR. PER UNIV. S7 XL |
| 0522790501H | CUFFIA DI ASPIRAZIONE PER UNIVERSALE |
| 0522790521A | CUFFIA ASPIRAZIONE LAME X UNIVERS. |
| 0522790522C | COPERCHIO PER CUFFIA CON LAME SU UNIVERSAL S.SETXL |
| 0522790541C | CUFFIA DI ASPIRAZIONE PER UNIVERSALE CON S.L.T. |
| 0522790561E | CUFFIA DI ASPIRAZIONE PER ELETTROMANDRINO COLOMBO |
| 0522790601A | DISTANZIALE PER CHIOCCIOLA |
| 0522790603E | CHIOCCIOLA PORTA REVOLVER ( PRL ) |
| 0522790607D | TRAVERSA DI BATTUTA PER REVOLVER ( PRL ) |
| 0524140009B | RULLO TRASCINATORE SUPERIORE D=140 H=11 GOMMATO |
| 0524141312E | BIELLA X PLG.FOLLE PICCOLA ESTRATT.C.6943-BRUNITA |
| 0531510020F | STAFFA ANCORAGGIO P170 RIALZATE |
| 0533510104L | STAFFA FISSAGGIO A TERRA BASAMENTO TENONATRICE |
| 0533531248A | CUFFIA X SEPARATORE LISTELLO SU METHOD |
| 0533531303G | SUPPORTO PER SCIVOLO LISTELLO ( PRL ) |

| Codice/Code | Descrizione/Descr./Beschr./Denom. |
|---|---|
| 0539012163D | CARTER DI CHIUSURA PER CAPOTE TTL |
| 0539014209E | SUPPORTO CHIAVETTA |
| 0539034703G | TIRANTE DI BLOCCAGGIO |
| 0539055800H | VITE PER BATTUTA |
| 0539057302D | LEVA PER TTL |
| 0539730018G | SLITTA MOVIMENT.COLTELLO DIVISORE |
| 0539730031D | STIVALE RECUPERO LISTELLO -BRUNITO- |
| 0539730034A | SUPPORTO MARTELLO ANTIRITORNO |
| 0552100100D | SUPPORTO A SQUADRO SOST. CARICATORE CS1 |
| 0552100107L | CORPO OSCILLANTE PER CARICATORE CS1 |
| 0552100114D | CARTER CHIUSURA CARICATORE CS1 |
| 0552100115F | GUIDA A PARETE DI SINISTRA |
| 0552100116H | FORCHE PER RASTRELLIERA TENUTA LATERALE |
| 0552100118C | FORCA PER RASTRELLIERA TENUTA DI CODA |
| 0552100120F | SPONDA A DX DI FRONTE AL CARICATORE |
| 0552100124E | QUADRO PER CENTRALINA PNEUM. PER CARICATORE CS1 |
| 0552100132B | INTERFACCIA-CS1-BRUNITO- |
| 0552100133D | SUPPORTO MICRO |
| 0552100134F | STAFFA PORTA MICRO |
| 0566540103D | SUPPORTO MOTORE SOLL.TRAINO |
| 0566542529A | PULEGGIA DENTATA AT5 Z=56 |
| 0710030208E | GIUNTO CARDANICO FEMM. A SEZ.QUADRA 20X20X2 L=294 |
| 0710120600E | POMPA TRIF. 220/380 50-60 |
| 0710830024C | MT 100 SPE P2 KW6/10,3 V220/380 50/100 |
| 0710830070L | MT 100 SPE P2 KW7,2/10,3 V230/400 60/100 |
| 0711132522F | VITE+CHIOC.RIC D=25 P=5 170 |
| 0711133713C | PULEGGIA MOTRICE DENTATA 55H200 |
| 0711136303F | GIUNTO MASCHIO QUADRO 15X15 L=269 |
| 0719412601A | MANIGLIA RIPRESA M 8 |
| 0719412602C | MANIGLIA RIPRESA M 10 |
| 0719412603E | LEVA A RIPRESA M12 SPE |
| 0719480112F | RUOTA PRESATORI D=80X20 |
| 0721900301H | FRESA RASANTE 150X12X40 Z4 V2 |
| 0721900302A | FRESA RASANTE 165X12X40 Z4 V2 |
| 0721900303C | FRESA RASANTE 150X12X50 Z4 V2 |
| 0721900304E | FRESA RASANTE 165X12X50 Z4 V2 |
| 0721900305G | FRESA RASANTE 150X12X1"13/16 Z4 V2 |
| 0721900306L | FRESA RASANTE 165X12X1"13/16 Z4 V2 |
| 0721900316A | FRESA RASANTE 165X12X1"1/2 Z4 V2 |
| 0721940231H | GIUNTO ELESTICO TRASCO P19-24 B AR 92 SHORE |
| 0721940544C | CILINDRO PNE. 40 50 S40 SE S DIOTTAL. |

| Codice/Code | Descrizione/Descr./Beschr./Denom. |
|---|---|
| 0721940593F | GIUNTO ELAST. TRASCO-P24/32 BAR 92 SHORE |
| 0721940808D | CIL.PNE 25 40 DIOTTAL. |
| 0722730303L | GIUNTO FEMM.SEZ.QUADRA 20X20 L=604 |
| 0722730735F | GIUNTO CARDANICO FEMM. A SEZ.QUADRA 20X20X2 L=244 |
| 0722731191B | VITE+CHIOC.RIC. D=25 P=5 L=365 SPEC. |
| 0722732012D | VITE+CHIOC.RIC D=25 P=10 L=195 VERSIONE ELETTR |
| 0722732022E | VITE+CHIOC.RIC D=25 P=5 L=620 POS. V.SX. ORIZ |
| 0722732033H | VITE+CHIOC.RIC D=25 P=5 L=645 X TTL |
| 0722740014H | GIUNTO CARDANICO L.MIN 285 MAX 340 |
| 0722740030B | PIGNONE CONDUTTORE Z=18 RULLO MOT. |
| 0722740061G | GIUNTO CARDAN.ALL.400N/MT LMIN.285 MAX.340 TRASMIL |
| 0722740115C | DADO M12 SX NORM.M4 DI BLOCCAGGIO |
| 0722740119B | PULEGGIA DENTATA MOTRICE 22 L 100 |
| 0722740120C | PULEGGIA DENTATA CONDOTTA 48 L 100 |
| 0722740131F | GIUNTO FEMMINA SEZ.QUADRA 20X20 L.TOT=444 |
| 0722740132H | GIUNTO MASCHIO SEZ.QUADRA 15X15 L=189 |
| 0722740133A | GIUNTO FEMM.SEZ.QUADRA 20X20X2 L=174 |
| 0722740136G | CAVO E GUAINA X SOLL.TRAVERSA |
| 0722740139D | INDIC. GRAV. FIAMA IP90 R=20/1 SCALA 0-25 DX 50 HZ |
| 0722740149E | INDIC. GRAV. FIAMA IP90 R=20/1 SCALA 0-30 DX 60 HZ |
| 0722740703A | PULEGGIA DENT 22 H 100 F L=92 |
| 0722740704C | DISPOS.COM.INVERTER ELCA ERL100 |
| 0722741008G | PULEGGIA DENTATA MOTRICE AT10 Z=18 |
| 0722741025C | RIDUT. TECNOINGR. EPICICLOIDALE BGT 600 STD |
| 0722741026E | SMOT BRUSHLESS NM1,35 G3000 TETRA 56X56 MPC M.P.C. |
| 0722765001A | GR.FRESE PER PIANO SCANALATO S.SET XL ALB. 40MM |
| 0722765002C | GR.FRESE PER PIANO SCANALATO S.SET. XL ALB. 50MM |
| 0722765003E | GR.FRESE PER PIANO SCANALATO S.SET XL ALB. 1"13/16 |
| 0722765031D | ANELLO 60X43,0375X0,1 DI SPESSORAMENTO PER ALB.1"1 |
| 0722765200C | FRESA Ø 80 A45° PER SPIGOLATORE |
| 0722770415F | CHIUSURA A BARILOTTO PIEGATA GIUSSANI |
| 0725414714E | ELETTROMAGN. 110V TIPO C45 + SONDA TERMICA |
| 0733521168C | ASS.ENCODER 100IMP/G CON CONNETTORI |
| 0733530105A | VITE+CHIOC.RIC D=25 P=5 L=620 POS. ORIZ. |
| 0736223847L | GUIDA C/PATTINO SFERE HSR20R1SSCO+340LH THK |
| 0736234876D | ELETTROMANDRINO 9 HP 18000' COLOMBO (C.10281) |
| 0736237069E | CONN.M LUNGO + MICRO M8X1 PNP |
| 0736237074E | CONN.DIR.F.CAVO MT3 SKM3-3 ESHA |
| 0738210165A | SMOT BRUSHLESS NM2,2 G3000 TETRA 85X85 M.P.C. |
| 0739045501F | GIUNTO CARDAN.ALL. OMOCINETICO |
| 0739715095E | GUIDA C/PATTINO SFERE SR20W-L=416 1 PATTINO THK |
| 0739736140F | ASS. ENCODER 100IMP/G CON CONNETTORI LINE DRIVE |
| 0739736141H | ASS.ENCODER 500IMP/G C/CONNETTORI 5V 3CAN |
| 0739736145G | ASS.ENCODER 300IMP/G CON CONNETTORI LINE-DRIVE |
| 0746735003L | FINECORSA PROXIMITI INDUTT. M8X1 + CONNETTORE |
| 0766535414B | SMOT BRUSHLESS NM0,9 G5200 TETRA56X56 M.P.C. |
| 0766547297G | ASS.CUSCINETTI (COPPIA)50X90X20 ALTA P. |
| 0766547298L | CUSC.RAD.RIG.1C SFERE 40X90X23 (INGRASSATO) |
| 0766547299B | CUSC.RAD.RIG.1C SFERE 55X90X18 (INGRASSATO) |
| 0766580007D | INDIC. NUM. DIGITALE ASSOLUTO LIKA |
| 0775190005F | MT NC SPE P2 KW1,03 PE3S AR V220/380 200 |
| 0790568055L | MOLLA EL.CIL TRAZ 2,6=DF 18,0 =DE 80,0 =LL |
| 1111111111F | INDICE |
| 1411020904F | PROFILATO DI GUIDA |
| 1416330018C | FLANGIA RITEGNO VITI |
| 1422730131H | COPERCHIO CUFFIA V.S |
| 1501711500F | PIASTRINA TIRAGGIO CINGHIE DIS.01711500 |
| 1510812603F | FORMAGELLA DI APPOGG H=15 D=90 10812603F |
| 1519410087D | FORMAGGELLA DI APPOGGIO H=90 MM 19410087 |
| 1521420606B | STAFFA BLOCCAGGIO PIANE DIS.21420606 |
| 2710101600D | ASSIEME RUOTA LIBERA |
| 2710103700H | GR.PRESSATORE SING.VERT.A RULLO |
| 2710104100F | ASS.APPARECCHIO PRE-SET ELETTR.30 |
| 2710104900D | ASSIEME PRESET 35 |
| 2710105400D | ASSIEME RUOTA LIBERA N.76 DENTI |
| 2710105600H | ASS.CAVO RS232 PER COLLEGARE PRESET |
| 2711131510B | ASS.MULCAM BALL.2T + PG13,5 + CAVO MT.3,6-QTA'1 |
| 2711135400C | ASS.BLOCCAGGIO RAPIDO |
| 2711135410D | ASS.BLOCCAGGIO RAPIDO (NON EQUILIBRATO)2006 |
| 2716048201F | SG.MANIGLIA BLOCCAGGIO UTENSILI SU ALBERO(BRUNITO) |
| 2719090201E | AS. SERIE DI CHIAVI PER PACCO ACCESSORI |
| 2719440113B | ASSIEME CHIAVETTA PER RUOTE DI TRASCINAM. -BRUNITO |
| 2719461305E | GR.CASSETTA CON ATTREZZI |
| 2721941001D | PRESET ALBERO 40 MM. LETTURA IN MM. |
| 2721941002F | PRESET ALBERO 40 MM. LETTURA IN POLLICI |
| 2722701000C | ASSIEME SCATOLA RIDUTTORE CON USCITA MOTO |
| 2722701001E | ASSIEME SCATOLA RIDUTTORE |
| 2722701002G | ASSIEME SCATOLA RIDUTTORE CON USCITA DX |
| 2722701003L | ASS.SCATOLA RIDUTTORE USCITA SX |
| 2722701004B | CHIAVETTA L=25 X RULLO TRAINO |
| 2722701005D | ASSIEME RIDUT.SOLO SX USCITA MOTO RULLI |
| 2722712503D | MANDRINO HSK63F PER V.DX V.SX |

| Codice/Code | Descrizione/Descr./Beschr./Denom. |
|---|---|
| 2722712506A | GR.SBLOCCAGGIO IDRAULICO HSK63F |
| 2722732211H | ASS. VALVOLE SPIGOLATORE SPOSTAM.MANUALE |
| 2722732212A | ASS. VALVOLE SPIGOLATORE SPOSTAM.AUTOM. |
| 2722740705G | INVERTER TRIF 220VAC 5,50 KW SSS2T055/T+SCATOLA AN |
| 2722740706L | INVERTER TRIF 380VAC 5,50 KW SSS4T055/T+SCATOLA AN |
| 2722740707B | INVERTER TRIF 380VAC 5,50 KW (SUPERSET) |
| 2722740801A | ASS.MULCAM BALL.2 TASTI + PG13,5 + CAVO-QTA'2 |
| 2722740891A | ASS.MULCAM BALL.3 TASTI + PG13,5 + CAVO-QTA'2 |
| 2722760101L | GUIDA DX TRA 1' V.DX E 1' V.SX |
| 2722760117D | GUIDA DX TRA 1' V.DX E 1' V.SX (PER TTL) |
| 2722760119H | GUIDA DX PRIMA DEL O.S. PER 'TTL' |
| 2722760140B | GUIDA DX TRA 1' V.DX E 1' V.SX H.40 |
| 2722760172L | GUIDA DX TRA 1V.DX E 1V.SX CROMATA |
| 2722765101E | KIT PIALLE TERSA E93 125X235X40 |
| 2722765102G | KIT PIALLE TERSA E93 125X135X40 |
| 2722765103L | KIT PIALLE TERSA E93 125X100X40 |
| 2722765104B | KIT PIALLE TERSA 'R2000' 125X235X40 |
| 2722765105D | KIT PIALLE TERSA 'R2000' 125X135X40 |
| 2722765106F | KIT PIALLE TERSA 'R2000' 125X100X40 |
| 2722770105A | SPONDA DX |
| 2722770117F | ASSIEME BANDELLA |
| 2722770124A | SPONDA DX PER TTL |
| 2722770125C | ASSIEME BANDELLA (CS1) |
| 2722770130C | SPONDA DX PER CARICATORE BASE 1 |
| 2722770131E | ASSIEME BANDELLA PER COMP.31 |
| 2722770206E | ASS.SPONDA SX |
| 2722770301F | CABINATURA CENTRALE COMP.5 |
| 2722770321H | ASSIEME CABINA CENTRALE X UNIVERSALE |
| 2722770330G | CABINATURA CENTRALE S.SET XL CMP.31 |
| 2722770512D | SPONDA DX TTL H=180 |
| 2722785101L | ASS.FILTRO G1/4 FIL 100 1/4 20 RMSA |
| 2722785201B | ASS.FILTRO G1/4 FIL 100 1/4 20RMSA ELETTRONICA |
| 2722785202D | ASS.FILTRO G1/4 FIL 100 1/4 20RMSA + PRESS.+MANOM. |
| 2722790305L | ASS. BLOCCAGGIO ROTAZ. UNIV. SUPERSETXL |
| 2723838663G | SERIE ANELLI D=35 |
| 2723838801A | SERIE ANELLI D=1' 1/2X112 |
| 2723843006A | GR.ENCODER D=30 + SPINOTTO (50 IMPULSI) > ELTRA < |
| 2736237456H | GR.PORTAUTENSILE HSK63F D=40 L=143 |
| 2739030101B | ANELLO DENTATO DI BLOCCAGGIO UTENSILI |
| 2739074300G | FRESA RASANTE PER PIALLE 'TERSA E93' (COMPACT23) |
| 2739074301L | FRESA RASANTE 150X12X40 'TERSA R2000' |

| Codice/Code | Descrizione/Descr./Beschr./Denom. |
|---|---|
| 2739090101E | VALV.DOSAGGIO M10X1 026012+060510+040710 C/ANEL+RA |
| 2746750101H | INVERTER TRIF 220VAC 5,50 KW SSS2T055+SCATOLA ANSA |
| 2746750102A | INVERTER TRIF 380VAC 5,50 KW SSS4T055+SCATOLA ANSA |
| 2746750201A | INVERTER TRIF 220VAC 7,50 KW SSS2T075+SCATOLA ANS |
| 2746750202C | INVERTER TRIF 380VAC 7,50 KW SSS4T075+SCATOLA ANS |
| 2752100002C | CENTRALINA PNEUMATICA PER CARICATORE CS1 |
| 2752100003E | CENTRALINA OLEODINAMICA COD.336/98 PERINI |
| 2903048101A | A.MANIGLIA CONICA X VOLANTINO |
| 2911135100A | ASS. MANDRINO HSK63F (C.14437) |
| 2911135105B | ASS. SBLOCCO IDRAULICO (C.14437) |
| 2911140900E | RITORNO PEZZI L=5500 SCORNIC. (MOD.RP/S-2500/5500 |
| 2911140901G | RITORNO PEZZI L=6340 SCORNIC. (MOD.RP/S-2500/6340 |
| 2911140902L | RITORNO PEZZI L=7500 SCORNIC. (MOD.RP/S-2500/7500 |
| 2911140903B | RITORNO PEZZI L=8000 SCORNIC. (MOD.RP/S-2500/8000 |
| 2911140909E | RITORNO PEZZI L=4500 SCORNIC. (MOD.RP/S-2500/4500 |
| 2911140925H | RITORNO PEZZI TOPSET-XL (15789) |
| 2921920201G | ASS. IMP.PNEUM. X VELO D'ARIA SUL PIANO |
| 2921967201D | GR. PRESSATORE IN USCITA X UNIVERSALE |
| 2922712500B | MANDRINO CAMBIO UT. HSK63F GR.VERT.DX.-SX. |
| 2922720101E | GR.SLITTA MOVIMENT. COLTELLO DIVISORE (PER PRL) |
| 2922760101D | GR.MANDRINO X REC.LIST.(PRL) AUTOFR. HZ50 V230/400 |
| 2922770402E | GR. SPORTELLO POSTERIORE |
| 2922770404L | GR. SPORTELLO POSTERIORE PER UNIVERSALE |
| 2922770405B | GR.SPORTELLO POSTERIORE MACCHINA O.I. HP30 |
| 2922770406D | GR.SPORTELLO POSTERIORE |
| 2922780101H | GR.SPIGOLATORE |
| 2937220503E | ASS. TRATTAMENTO ARIA G.1/4 |
| 2937220504G | ASS. GR.TRATT.ARIA G.1/4 CON ELETT.VALV. |
| 2939067101A | GR.REGISTRACOLTELLI -C23- |
| 2939075101A | GR.SIRINGA CON GRASSO C23 |
| 2952100006F | CARICATORE CS1 (SUPERSET) |
| 2952100007H | CARICATORE CS1 (SUPERSET XL) |
| 2987772011E | ASS. MOLTIPLICATORE DI PRESSIONE PNEUMATICO |
| 9622020312F | VIS.QUOTA HS 92 |
| 9622089002B | CN SPV232 SEPRI 2 ENC |